ÄKTA avant User Manual

Table of Contents

1 Introduction 6

1.1 Important user information 7
1.2 ÄKTA avant overview 9
1.3 Associated Documentation 11

2 The ÄKTA avant instrument 13

2.1 Overview illustrations 14
2.2 Runs in a cold environment 28
2.3 Removing the foldable door and pump cover 29
2.4 Liquid flow path 33
2.5 Instrument display 35
2.6 Accessories 41
2.6.1 Column holders 42
2.6.2 Tubing holders and other accessories 46
2.6.3 Extension box 51

3 Standard instrument modules 53

3.1 Pumps 54
3.2 Mixer 58
3.3 Valves, overview 60
3.4 Inlet valves 62
3.5 Injection valve 68
3.6 Column valve 71
3.7 Outlet valve 74
3.8 Pressure monitors 76
3.9 pH valve and pH monitor 78
3.10 Built-in fraction collector 81
3.10.1 Function 82
3.10.2 Illustrations of the built-in fraction collector 84
3.10.3 Cassettes, cassette tray and racks 87
3.11 UV monitor 94
3.12 Conductivity monitor 96

4 Optional instrument modules 98

4.1 System extension overview 99
4.2 Installation of optional modules 100
4.3 Extra inlet valves 108
4.4 Second Column valve 112
4.5 Extra Outlet valves 115
4.6 External air sensors 118
4.7 Loop valve 122
4.8 Versatile valve 126
4.9 Fraction collector F9-R 128
4.10 Second Conductivity monitor 135

4.11 Second UV monitor 137
4.12 I/O-box 141
4.12.1 Overview of the I/O-box 142
4.12.2 Analog connector and signals 144
4.12.3 Digital connector and signals 146
4.12.4 Connect external equipment to the I/O-box 148
4.13 General system settings 151

5 Operation 153
5.1 Before you prepare the system 154
5.2 Prepare the flow path 155
5.3 Start UNICORN and connect to the system 160
5.4 Prime inlets and purge pump heads 163
5.4.1 Prime buffer inlets and purge system pumps 164
5.4.2 Prime sample inlets and purge Sample Pump 171
5.4.3 Prime Q inlets 176
5.5 Connect a column 180
5.6 Set pressure alarms 185
5.7 Sample application 187
5.7.1 Sample application using direct injection into the column 189
5.7.2 Sample application using a Superloop 192
5.7.3 Sample application using a sample loop 197
5.8 Fractionation 200
5.8.1 Prepare the built-in fraction collector 201
5.8.2 Prepare Fraction collector F9-R 207
5.8.3 Fractionation overview 215
5.9 Create a method and perform a run 222
5.9.1 Create a method 223
5.9.2 Perform a run 227
5.9.3 Monitor the run 230
5.9.4 After run procedures 233

6 Performance tests 236
6.1 General performance test actions 237
6.2 Air sensor tests 240
6.3 Built-in Fraction collector test 242
6.4 Fraction collector F9-R test 247
6.5 Quaternary valve test 250
6.6 System test 253
6.7 UV monitor U9-L test 257

7 Maintenance 259
7.1 Maintenance Manager 260
7.2 Maintenance program 265
7.3 Weekly maintenance 269
7.3.1 Change pump rinsing solution 270
7.3.2 Replace the inline filter 272
7.3.3 Clean built-in fraction collector sensors 273

7.4 Monthly maintenance 275
7.4.1 Check the flow restrictor 276
7.4.2 Check the function of the pump flow restrictors 278
7.5 Semiannual maintenance 279
7.5.1 Clean the UV flow cell 280
7.5.2 Replace the pH electrode 283
7.6 Maintenance when required 284
7.6.1 Clean the instrument externally 285
7.6.2 Perform System CIP 286
7.6.3 Perform Column CIP 294
7.6.4 Clean built-in fraction collector 298
7.6.5 Clean Fraction collector F9-R 301
7.6.6 Storage of the pH electrode 302
7.6.7 Clean the pH electrode 304
7.6.8 Regenerate dried out pH electrode 308
7.6.9 Clean pump head check valves 309
7.6.10 Clean pump flow restrictors 312
7.6.11 Wipe off excess oil from the pump head 314
7.6.12 Clean the Conductivity flow cell 315
7.7 Calibration procedures 317
7.7.1 Calibrate the pH monitor 318
7.7.2 Calibrate the pressure monitors 320
7.7.3 Calibrate the Conductivity Monitor 324
7.7.4 Calibrate the UV monitors 328
7.8 Replacement procedures 332
7.8.1 Replace tubing and connectors 333
7.8.2 Replace the Mixer 335
7.8.3 Replace the O-ring inside the Mixer 337
7.8.4 Replace the UV monitor U9-M flow cell 339
7.8.5 Replace UV monitor U9-L flow cell 342
7.8.6 Replace Flow restrictor 344
7.8.7 Replace the inlet filters 345
7.8.8 Replace pump head check valves 346
7.8.9 Replace pump rinsing system tubing 349
7.8.10 Replace a valve module 351
7.8.11 Replace pump pistons, piston seals, O-rings and rinse membranes 354

8 Troubleshooting 355
8.1 Introduction to troubleshooting 356
8.2 Troubleshooting: General Checklist 358
8.3 Troubleshooting: Monitors 360
8.4 Troubleshooting: Valves 378
8.5 Troubleshooting: Fraction collector 381
8.6 Troubleshooting: Pumps 394
8.7 Troubleshooting: Other components 401
8.8 Troubleshooting: Instrument communication 410
8.9 Error codes 412

9 Reference information 418
9.1 System specifications 419
9.2 Module specifications 421
9.3 Tubing and connectors 429
9.4 Chemical resistance guide 437
9.5 Wetted materials 442
9.6 Predefined methods and phases 444
9.7 System settings 454
9.7.1 System settings - UV 455
9.7.2 System settings - Conductivity 456
9.7.3 System settings - pH 458
9.7.4 System settings - Pumps and pressures 459
9.7.5 System settings - Air sensor 461
9.7.6 System settings - I/O-box 462
9.7.7 System settings - Fraction collection 463
9.7.8 System settings - Watch parameters 466
9.7.9 System settings - Advanced 467
9.7.10 System settings - Data collection 469
9.8 Using Manual instructions 470
9.8.1 Manual instructions - Pumps and pressures 471
9.8.2 Manual instructions - Flow path 474
9.8.3 Manual instructions - Monitors 476
9.8.4 Manual instructions - Fraction collection 478
9.8.5 Manual instructions - I/O-box 482
9.8.6 Manual instructions - Alarms 483
9.8.7 Manual instructions - Advanced 487
9.8.8 Manual instructions - Watch parameters 490
9.8.9 Manual instructions - Other 491
9.9 Available Run data 492
9.10 Available Curves 496
9.11 Injection volumes and peak broadening 499
9.12 Delay volumes 500
9.13 Component volumes 504
9.14 Pressure control 507
9.15 Check and change the Node ID of a module 510

10 Ordering information 514

Index 525

1 Introduction

Purpose of the User Manual

The User Manual provides you with instructions and information to run the ÄKTA avant system. It also includes relevant guidance for practical handling and maintenance of instrument components.

In this chapter

This chapter contains the following sections:

Section	See page
1.1 Important user information	7
1.2 ÄKTA avant overview	9
1.3 Associated Documentation	11

1.1 Important user information

Read this before operating the product

All users must read the entire *Operating Instructions* before installing, operating or maintaining the product.

Always keep the *Operating Instructions* at hand when operating the product.

Do not operate the product in any other way than described in the user documentation. If you do, you may be exposed to hazards that can lead to personal injury and you may cause damage to the equipment.

Intended use of the product

ÄKTA avant is a liquid chromatography system intended for method and process development in purification of biomolecules. The system can be used to screen for optimal choice of columns, media and running parameters to purify selected proteins.

The ÄKTA avant system is intended for research use only, and shall not be used in any clinical procedures, or for diagnostic procedures.

Prerequisites

In order to follow this manual and use the system in the manner it is intended, it is important that:

- You have a general understanding of how the computer and Microsoft® Windows® work.
- You understand the concepts of liquid chromatography.
- You have read and understood the Safety instructions chapter in *ÄKTA avant Operating Instructions*.
- A user account has been created according to the *UNICORN™ Administration and Technical Manual*.

Safety notices

This user documentation contains safety notices (WARNING, CAUTION, and NOTICE) concerning the safe use of the product. See definitions below.

WARNING

WARNING indicates a hazardous situation which, if not avoided, could result in death or serious injury. It is important not to proceed until all stated conditions are met and clearly understood.

CAUTION

CAUTION indicates a hazardous situation which, if not avoided, could result in minor or moderate injury. It is important not to proceed until all stated conditions are met and clearly understood.

NOTICE

NOTICE indicates instructions that must be followed to avoid damage to the product or other equipment.

Notes and tips

Note: *A note is used to indicate information that is important for trouble-free and optimal use of the product.*

Tip: *A tip contains useful information that can improve or optimize your procedures.*

1.2 ÄKTA avant overview

Introduction

ÄKTA avant is a preparative liquid chromatography system intended for purification of proteins as well as other bio-molecules and used for method and process development. The system is equipped with valves, detectors and fraction collector, integrated in the flow path, needed for automated control and optimal performance. The system can be used to screen for columns, media, and running parameters to purify selected proteins

This section gives an overview of the ÄKTA avant instrument and UNICORN™ software. For detailed information about UNICORN, see the UNICORN manuals listed in *ÄKTA avant user documentation, on page 11*. For detailed information about the instrument, see *Chapter 2 The ÄKTA avant instrument, on page 13*.

Main features

The main features of ÄKTA avant are listed below.

- The ÄKTA avant is a complete system including all modules needed for normal method and process development.
- The ÄKTA avant system can be easily extended with additional modules, e.g. for extra samples, buffers, outlets, columns and integration of optional components.
- The ÄKTA avant instrument is compact with a built-in fraction collector.
- Cooling of the built-in fraction collector enables secure storage of the purified samples and unattended runs over night.
- The built-in Instrument display shows instrument status and method state.
- ÄKTA avant is controlled by the UNICORN software: a complete package for control, experimental planning, supervision and evaluation of chromatography instruments and purification runs.
    - Purification and maintenance methods are easily created using predefined methods and method phases. Method phases are displayed graphically in a method outline and phase properties, which makes methods and phases easy to handle and edit.
    - Run statistics history for individual columns can be saved (e.g., total number of runs and number of runs since last cleaning procedure).
    - BufferPro (automatic buffer preparation) facilitates screening for optimal buffer compositions as well as preparation of single buffers.
    - Design of Experiments (DoE) is an integrated part of UNICORN that provides an organized approach that connects experiments in a rational manner.

UNICORN modules overview

UNICORN consists of four modules: ***Administration***, ***Method Editor***, ***System Control*** and ***Evaluation***. The main functions of each module are described in the following table.

Module	Main functions
Administration	Perform user and system setup, system log and database administration.
Method Editor	Create and edit methods using one or a combination of: • Predefined methods with built-in application support • Drag-and-drop function to build methods with relevant steps • Line-by-line text editing The interface provides easy viewing and editing of run properties.
System Control	Start, monitor and control runs. The current flow path is illustrated in the ***Process Picture***, which allows manual interactions with the system and provides feedback on run parameters.
Evaluation	Open results, evaluate runs and create reports. • The default ***Evaluation*** module includes a user interface optimized for workflows like quick evaluation, compare results and work with peaks and fractions. • To perform operations like Design of Experiments, users can easily switch to ***Evaluation Classic***.

When working with the modules ***Administration***, ***Method Editor***, ***System Control*** and ***Evaluation Classic*** it is possible to access descriptions of the active window by pressing the **F1** key. This can be especially helpful when editing methods

1.3 Associated Documentation

Introduction

This section describes the user documentation that is delivered with ÄKTA avant.

ÄKTA avant user documentation

The user documentation listed in the following table is delivered with ÄKTA avant.

Document	Main contents
ÄKTA avant Unpacking Instructions (29-1015-59)	Instructions for unpacking the instrument, and how to lift the instrument onto a bench.
ÄKTA avant Operating Instructions (29-1015-56)	Instructions needed to install, operate and maintain the system in a safe way.
ÄKTA avant User Manual (29-0351-84)	Instructions for handling the system. Descriptions of components. Information about how to run and maintain the system.
ÄKTA avant 25 Product Documentation (28-9910-00) OR *ÄKTA avant 150 Product Documentation* (28-9842-49)[1]	System specification and declaration of material conformity.

1 The instrument is delivered with the relevant document.

UNICORN user documentation

The user documentation listed in the following table is available from the ***Help*** menu in UNICORN or from the ***UNICORN Online Help and Documentation*** software accessed by pressing the **F1** key in any UNICORN module.

Documentation	Main contents
UNICORN Help	Descriptions of UNICORN dialog boxes (available from the ***Help*** menu).

Documentation	Main contents
Getting started with Evaluation ***Note:*** *Available in UNICORN 7.0 and later.*	• Video clips showing common workflows in the Evaluation module. • Overview of features of the Evaluation module.
UNICORN Method Manual [1]	• Overview and detailed descriptions of the method creation features in UNICORN. • Workflow descriptions for common operations.
UNICORN Administration and Technical Manual[1]	• Overview and detailed description of network setup and complete software installation. • Administration of UNICORN and the UNICORN database.
UNICORN Evaluation Manual[1]	• Overview and detailed descriptions of the Evaluation Classic module in UNICORN. • Description of the evaluation algorithms used in UNICORN.
UNICORN System Control Manual[1]	• Overview and detailed description of the system control features in UNICORN. • Includes general operation, system settings and instructions on how to perform a run.

1 Current UNICORN version is added to the title of the manual.

Additional literature

For practical tips on chromatography, refer to *ÄKTA Laboratory-scale: Chromatography Systems Instrument Management Handbook* (product code 29-0108-31).

2 The ÄKTA avant instrument

About this chapter

This chapter provides an overview of the ÄKTA avant instrument and the standard and optional instrument modules.

In this chapter

This chapter contains the following sections:

Section	See page
2.1 Overview illustrations	14
2.2 Runs in a cold environment	28
2.3 Removing the foldable door and pump cover	29
2.4 Liquid flow path	33
2.5 Instrument display	35
2.6 Accessories	41

2.1 Overview illustrations

Introduction

This section provides an overview of the system and its available modules.

Instrument configurations

ÄKTA avant is available with two standard module configurations, one for flow rates up to 25 ml/min and one for flow rates up to 150 ml/min. In this manual they are referred to as ÄKTA avant 25 (25 ml/min) and ÄKTA avant 150 (150 ml/min).

Illustration of the main parts of the instrument

The following illustration shows the location of the main parts of the instrument.

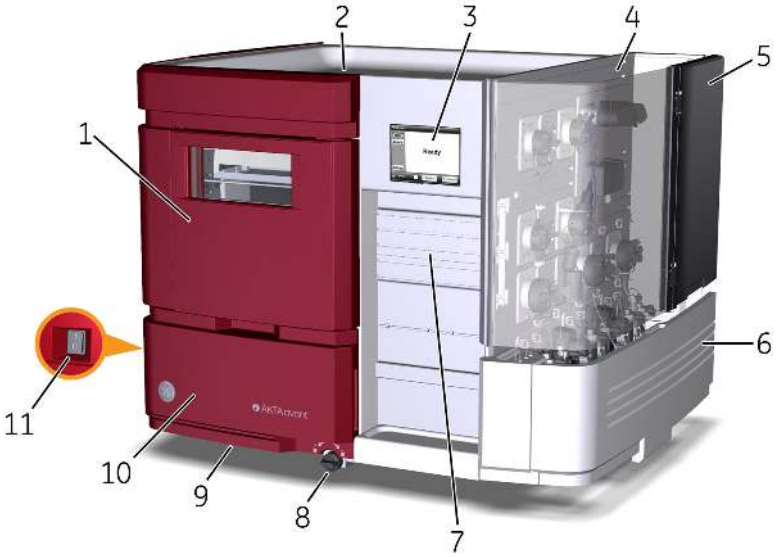

Part	Function	Part	Function
1	Fraction collector	2	Buffer tray
3	Instrument display	4	Wet side
5	Foldable door	6	Pump cover

Part	Function	Part	Function
7	Holder rails	8	Swivel foot lock/unlock knob
9	Swivel foot	10	Swing out toolbox
11	Power switch		

Illustration of the wet side modules of the instrument

The following illustration shows the modules of the wet side of the instrument.

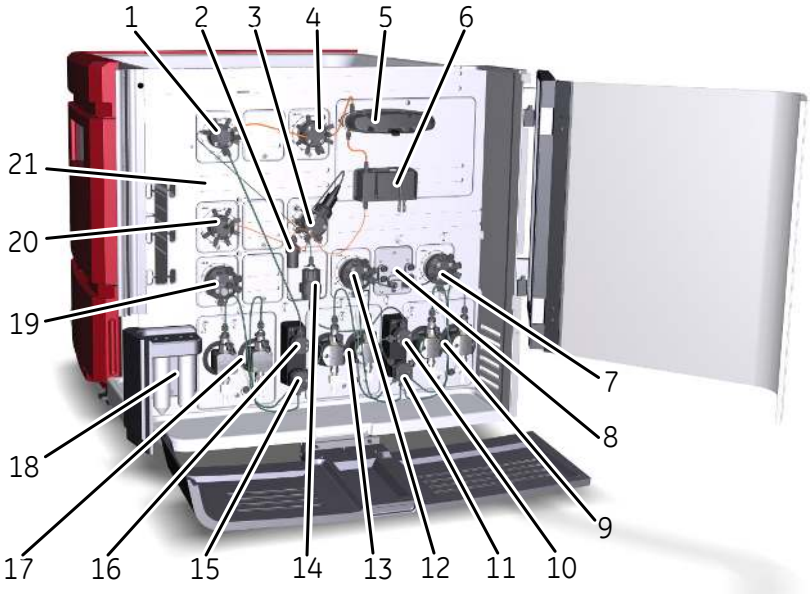

Part	Function	Part	Function
1	Injection valve	2	Flow restrictor
3	pH valve	4	Column valve
5	UV monitor	6	Conductivity monitor
7	Inlet valve B	8	Quaternary valve
9	System pump B	10	Pressure monitor of system pumps
11	System pump flow restrictor	12	Inlet valve A

Part	Function	Part	Function
13	System pump A	14	Mixer
15	Sample pump flow restrictor	16	Pressure monitor of sample pump
17	Sample pump	18	Pump rinsing solution tube
19	Sample inlet valve	20	Outlet valve
21	Holder rails		

Standard modules

ÄKTA avant is delivered with the modules listed in the following table.

Module	Label in	
	ÄKTA avant 25	ÄKTA avant 150
System pump A	**P9 A**	**P9H A**
System pump B	**P9 B**	**P9H B**
Sample pump	**P9-S**	**P9H S**
Pressure monitor	**R9**	**R9**
Mixer	**M9**	**M9**
Injection valve	**V9-Inj**	**V9H-Inj**
Quarternary valve	**Q9**	**Q9**
Inlet valve A	**V9-IA**	**V9H-IA**
Inlet valve B	**V9-IB**	**V9H-IB**
Sample inlet valve	**V9-IS**	**V9H-IS**
Column valve	**V9-C**	**V9H-C**
pH valve	**V9-pH**	**V9H-pH**
Outlet valve	**V9-O**	**V9H-O**
UV monitor	**U9-M**	**U9-M**
Conductivity monitor	**C9**	**C9**

Module	Label in	
	ÄKTA avant 25	ÄKTA avant 150
Built-in fraction collector	NA	NA

Optional modules

One or more of the modules in the following table may be added to the flow path of ÄKTA avant.

Module	Label in	
	ÄKTA avant 25	ÄKTA avant 150
Second Inlet valve A	**V9-A2**	**V9H-A2**
Second Inlet valve B	**V9-B2**	**V9H-B2**
Extra Inlet valve X1	**V9-IX**	**V9H-IX**
Extra Inlet valve X2	**V9-IX**	**V9H-IX**
Second Sample inlet valve	**V9-S2**	**V9H-S2**
Versatile valve	**V9-V**	**V9H-V**
Loop valve	**V9-L**	**V9H-L**
Second Column valve	**V9-C2**	**V9H-C2**
Second Outlet valve	**V9-O2**	**V9H-O2**
Third Outlet valve	**V9-O3**	**V9H-O3**
External air sensor L9-1.5	**L9-1.5**	**L9-1.5**
External air sensor L9-1.2	**L9-1.2**	**L9-1.2**
I/O-box	**E9**	**E9**
Second UV monitor	**U9-L**	**U9-L**
Second Conductivity monitor	**C9**	**C9**
Second Fraction collector	**F9-R**	**F9-R**

Illustration convention

In the valve illustrations below, the following convention is used to point out the location of the ports on the valve head. Loop valve **V9-L** is used as an example.

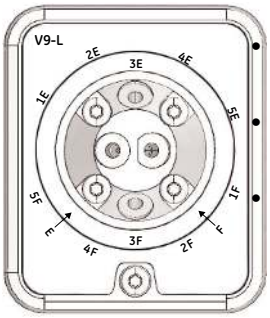

Ports located on the valve head rim are indicated outside the black ring (e.g., 1E, 2E, etc.).

Ports located on the pivot part of the valve head are indicated on the inside of the black ring (e.g., 3E and 3F).

Ports located on the valve head front are indicated by an arrow (e.g., E and F).

Description of standard modules

The following modules are installed in the instrument when delivered.

Module	Description
System pump A **P9 A** or **P9H A** 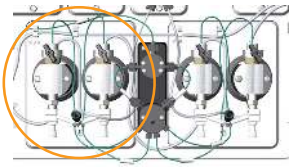	A high precision pump, which delivers buffer in purification runs. For further information, refer to *Section 3.1 Pumps, on page 54*.

Module	Description
System pump B **P9 B** or **P9H B** 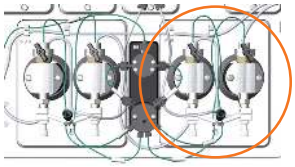	A high precision pump, which delivers buffer in purification runs. For further information, refer to *Section 3.1 Pumps, on page 54*.
Sample pump **P9-S** or **P9H S** 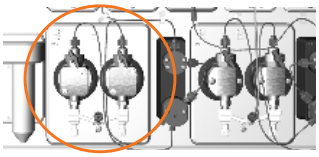	A high precision pump which delivers sample or buffer in purification runs. For further information, refer to *Section 3.1 Pumps, on page 54*.
Pressure monitor **R9** 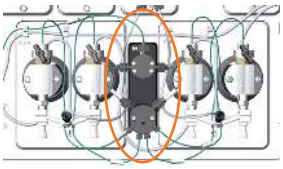	Pressure monitor which reads the system pressure after System Pump A and System Pump B. For further information, refer to *Section 3.8 Pressure monitors, on page 76*.

Module	Description
Pump flow restrictor 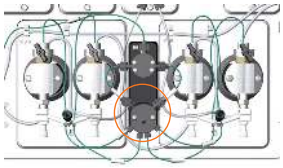	Prevents the system from siphoning when the flow path after the pump is open. Gives a small back pressure to the pump in extreme low pressure applications. For further information, refer to *Section 3.8 Pressure monitors, on page 76*.
Mixer **M9** 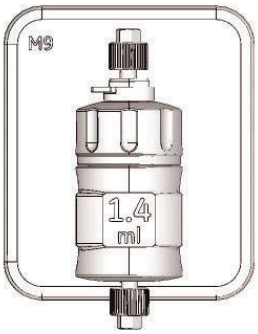	Mixes the buffers delivered from the system pumps to a homogeneous buffer composition. Three mixer chambers are available for ÄKTA avant 25. Available volumes are: 0.6 ml, 1.4 ml (mounted at delivery) and 5 ml. Three mixer chambers are available for ÄKTA avant 150. Available volumes are: 1.4 ml, 5 ml (mounted at delivery), and 15 ml. **CAUTION** **Risk of explosion.** Do not use Mixer chamber 15 ml with an ÄKTA avant 25 system configuration. The maximum pressure for Mixer chamber 15 ml is 5 MPa (50 bar). For further information, refer to *Section 3.2 Mixer, on page 58*.

Module	Description
Inlet valve A **V9-IA** or **V9H-IA** 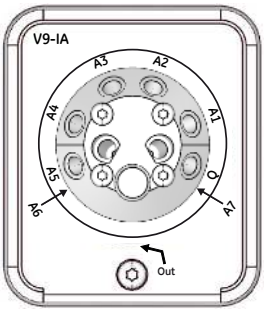 	Inlet valve for System Pump A with seven inlet ports and integrated air sensor. For further information, refer to *Section 3.4 Inlet valves, on page 62*.
Inlet valve B **V9-IB** or **V9H-IB** 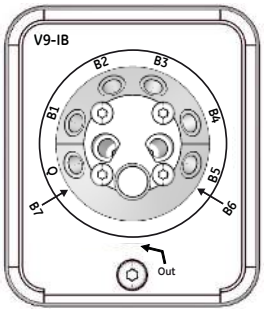 	Inlet valve for System Pump B with seven inlet ports and integrated air sensor. For further information, refer to *Section 3.4 Inlet valves, on page 62*.
Quaternary valve **Q9** 	Valve which allows automatic mixing of four different solutions. For further information, refer to *Section 3.4 Inlet valves, on page 62*.

Module	Description
Sample inlet valve **V9-IS** or **V9H-IS** 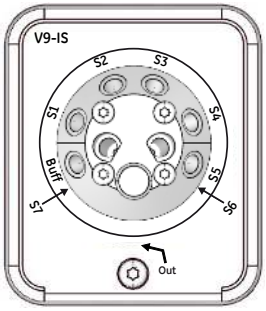	Inlet valve for sample solution, with eight inlet ports (seven sample inlets and one buffer inlet) and integrated air sensor. For further information, refer to *Section 3.4 Inlet valves, on page 62*.
Injection valve **V9-Inj** or **V9H-Inj** 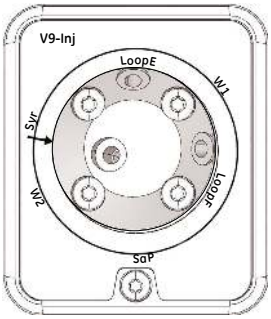	Valve which directs sample onto the column. For further information, refer to *Section 3.5 Injection valve, on page 68*.
Column valve **V9-C** or **V9H-C** 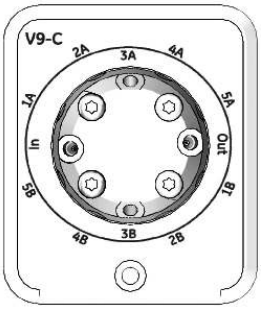	Column valve which connects up to five columns to the instrument, and directs the flow to one column at a time. The column valve features two integrated pressure sensors. Allows the user to choose flow direction through the column, or to bypass the column. For further information, refer to *Section 3.6 Column valve, on page 71*.

Module	Description
pH valve **V9-pH** or **V9H-pH** 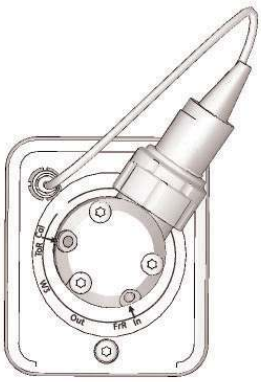 	Valve which enables the pH electrode to be included in the flow path or by-passed during a run. The pH electrode may be calibrated when installed in the pH Valve. It also enables the flow restrictor to be included in the flow path (default position) or by-passed during a run. For further information, refer to *Section 3.9 pH valve and pH monitor, on page 78*.
Outlet valve **V9-O** or **V9H-O** 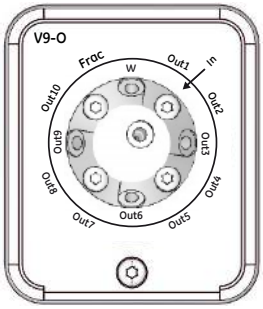 	Valve which directs the flow to the fraction collector, any of the ten outlet ports or waste. For further information, refer to *Section 3.7 Outlet valve, on page 74*.
UV monitor **U9-M** 	Monitor which measures the UV/Vis absorbance at up to three wavelengths simultaneously in the range 190 to 700 nm. For further information, refer to *Section 3.11 UV monitor, on page 94*.

Module	Description
Conductivity monitor **C9** 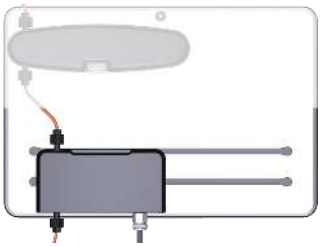	Monitor which continuously measures the conductivity of buffers and sample solutions. For further information, refer to *Section 3.12 Conductivity monitor, on page 96*.
Built-in fraction collector	Built-in fraction collector. A cooling function protects the fractions from heat degradation. For further information, refer to *Section 3.10 Built-in fraction collector, on page 81*.

Description of optional modules

The following modules may be added to the flow path.

Module	Description
Second Inlet valve A **V9-A2** or **V9H-A2**	Second inlet valves for System pump A, to extend the number of inlets up to 14. For further information, refer to *Section 4.3 Extra inlet valves, on page 108*.
Second Inlet valve B **V9-B2** or **V9H-B2**	Second inlet valves for System pump B, to extend the number of inlets up to 14. For further information, refer to *Section 4.3 Extra inlet valves, on page 108*.

Module	Description
Inlet valve X1 and Inlet valve X2 **V9-IX** or **V9H-IX** 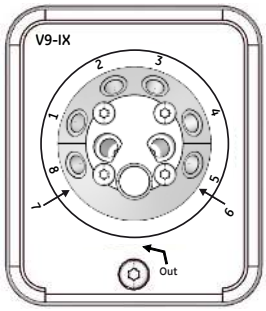	Inlet valve with eight inlet ports. No integrated air sensor. For further information, refer to *Section 4.3 Extra inlet valves, on page 108*.
Second Sample inlet valve **V9-S2** or **V9H-S2**	Second inlet valve for Sample pump to extend the number of sample inlets up to 14. For further information, refer to *Section 4.3 Extra inlet valves, on page 108*.
Versatile valve **V9-V** or **V9H-V** 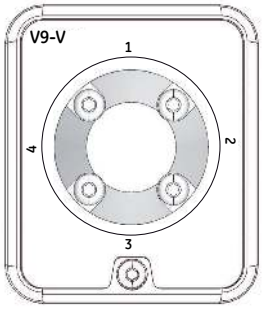	A 4-port, 4-position valve, which can be used to customize the flow path. For further information, refer to *Section 4.8 Versatile valve, on page 126*.
Loop valve **V9-L** or **V9H-L** 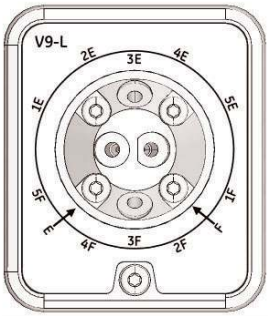	Valve which enables automatic sample application from up to five sample loops, or to collect intermediate fractions in automated two-step purification. For further information, refer to *Section 4.7 Loop valve, on page 122*.

Module	Description
Second Column valve **V9-C2** or **V9H-C2**	Valve which connects five additional columns to the instrument, extending the number of columns up to 10. The valve allows the user to choose flow direction through the column, or to by-pass the column. For further information, refer to *Section 4.4 Second Column valve, on page 112*.
Second Outlet valve **V9-O2** or **V9H-O2**	Valve which adds 12 outlet ports to the system, giving a total of 21 outlets. For further information, refer to *Section 4.5 Extra Outlet valves, on page 115*.
Third Outlet valve **V9-O3** or **V9H-O3**	Valve which adds 12 outlet ports to the system, giving a total of 32 outlets For further information, refer to *Section 4.5 Extra Outlet valves, on page 115*.
External air sensor **L9-1.5** or **L9-1.2**	Sensor which prevents air from being introduced into the flow path. For further information, refer to *Section 4.6 External air sensors, on page 118*.
I/O-box **E9**	Module which receives analog or digital signals from, or transfers analog or digital signals to, external equipment that has been incorporated in the system. For further information, refer to *Section 4.12 I/O-box, on page 141*.

Module	Description
Second UV monitor **U9-L** 	Monitor which measures the UV absorbance at a fixed wavelength of 280 nm. For further information, refer to *Section 4.11 Second UV monitor, on page 137*.
Second Conductivity monitor **C9** 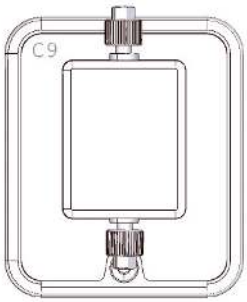 	Monitor which measures the conductivity of buffers and sample solutions. For further information, refer to *Section 4.10 Second Conductivity monitor, on page 135*.
Second Fraction collector **F9-R** 	Round fraction collector that can collect up to 175 fractions. For further information, refer to *Section 4.9 Fraction collector F9-R, on page 128*.

2.2 Runs in a cold environment

Introduction

The instrument can be placed and run in a cold cabinet or room. When running the instrument in a cold environment make sure to take the precautions listed in this chapter.

Precautions concerning runs in a cold cabinet

NOTICE

- **Avoid condensation**. If ÄKTA avant is kept in a cold room, cold cabinet or similar, keep it switched on in order to avoid condensation.
- **Avoid overheating**. If ÄKTA avant is kept in a cold cabinet and the cold cabinet is switched off, make sure to switch off ÄKTA avant and keep the cold cabinet open to avoid overheating.
- **Place the computer in room temperature**. If the ÄKTA avant instrument is placed in a cold room, use a cold room compatible computer or place the computer outside the cold room and use the Ethernet cable delivered with the instrument to connect to the computer.

Note: *When the instrument is kept in a cold cabinet or room, it is important to tighten all tubing connectors, also the inlet manifold connectors. Otherwise air might get into the flow path.*

Tip: *When runs are performed in a cold cabinet, make sure to adjust the target temperature of the built-in fraction collector temperature control function. The target temperature is 20°C by default. Settings for the temperature control function can be edited in the* ***System Settings*** *dialog box of* ***System Control****, or in the* ***Text Instructions*** *pane in* ***Method Editor****.*

2.3 Removing the foldable door and pump cover

Introduction

The foldable door and pump cover can be removed from the instrument, for example to fit the ÄKTA avant instrument in a cold cabinet. When using the instrument in a cold room or cold cabinet, make sure to follow the precautions listed below.

Remove the foldable door

While holding on to the foldable door, unscrew the four screws marked in the following illustration. The door can then be removed.

Remove the pump cover

Follow the instruction to remove the pump cover.

Step	Action
1	Open the pump cover.

Step	Action
2	Lift off the tray. 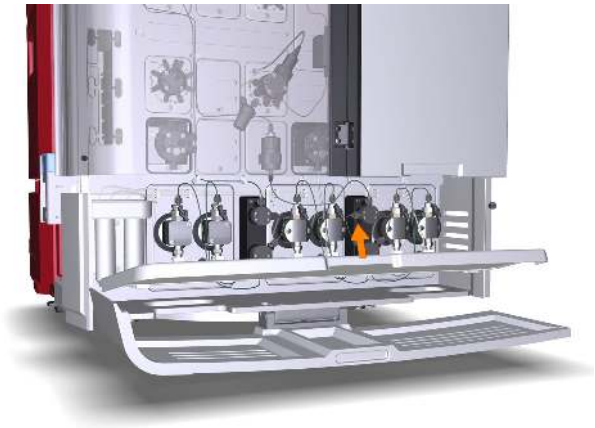
3	Unscrew the two countersinked screws marked in the illustration. 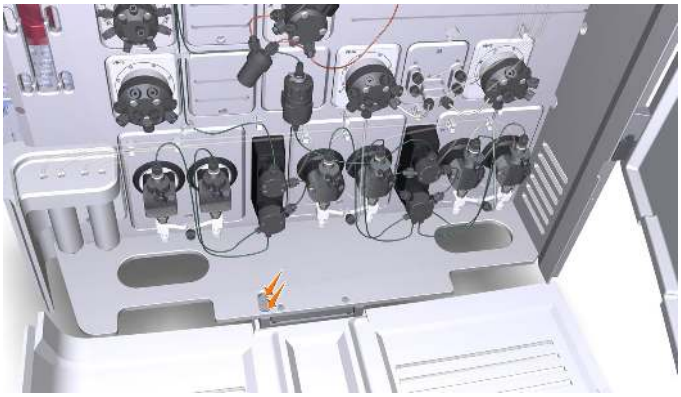
4	Pull out the two shafts. 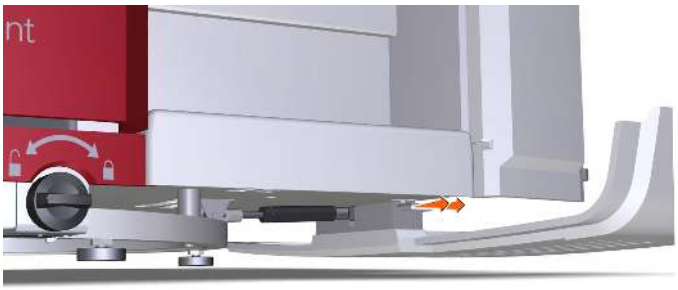

Step	Action
5	Lift off the pump cover.
6	Unscrew the three screws holding the hinge to the pump cover and remove the hinge. 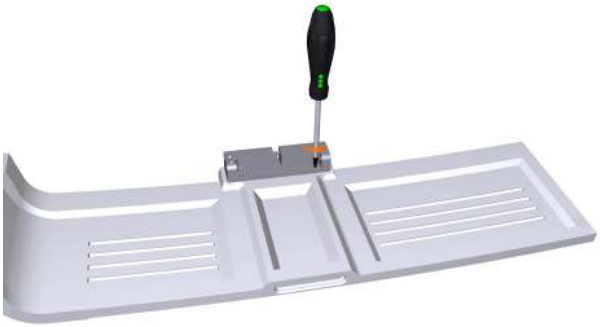
7	Screw the three screws back to the pump cover and put the pump cover in a safe place. 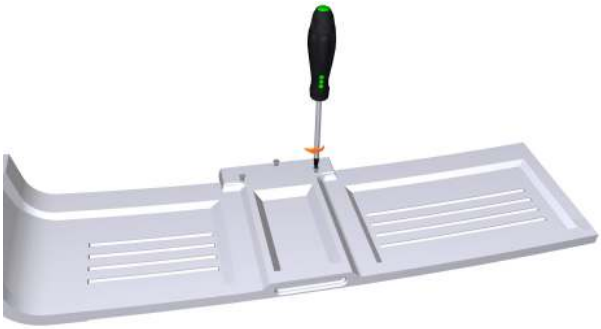

Step	Action
8	Put the inner shaft back through the hinge and damper, and push the hinge into place.
9	Put the outer shaft back into place, and screw the two countersinked screws back. 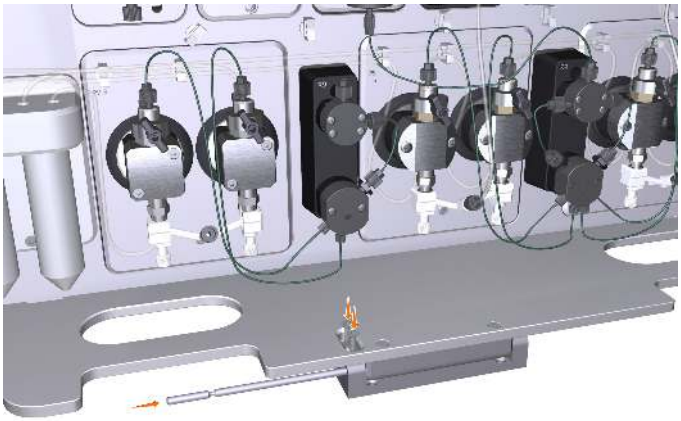

2.4 Liquid flow path

Illustration of the flow path

The following illustration shows an overview of the standard flow path.

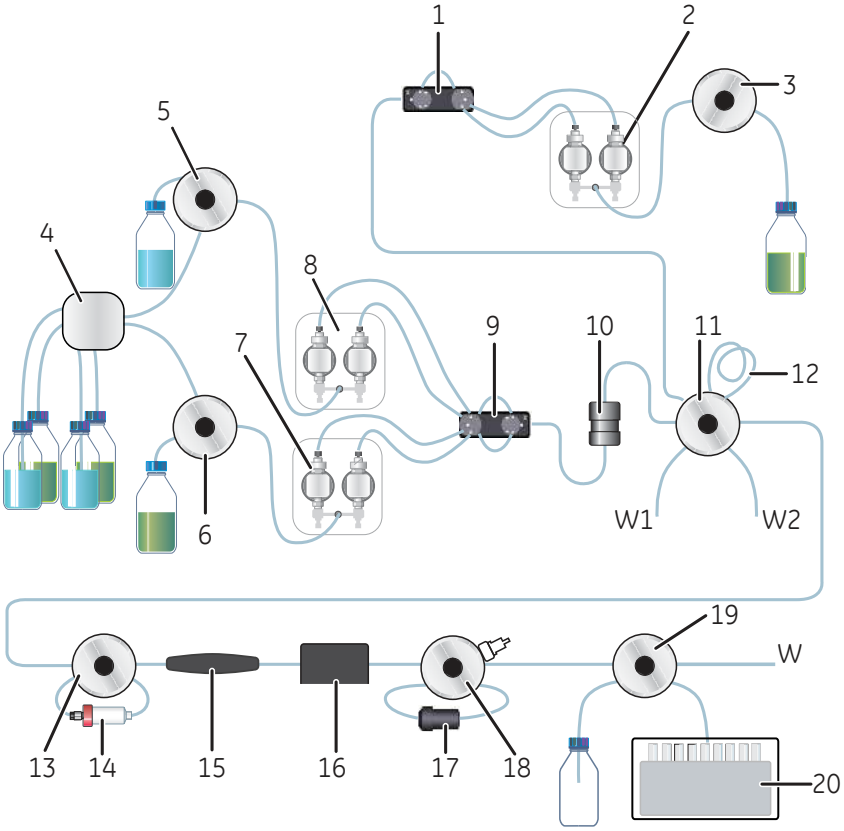

Part	Description
1	Pressure monitor
2	Sample pump
3	Sample inlet valve
4	Quaternary valve
5	Inlet valve A

Part	Description
6	Inlet valve B
7	System pump B
8	System pump A
9	Pressure monitor
10	Mixer
11	Injection valve
12	Sample loop or Superloop
13	Column valve
14	Column
15	UV monitor
16	Conductivity monitor
17	Flow restrictor
18	pH valve with pH monitor
19	Outlet valve
20	Fraction collector

2.5 Instrument display

Introduction

The Instrument display is located on the front of the ÄKTA avant instrument. The Instrument display shows the current state of the system. The Instrument display can also be used to view detailed information about an ongoing method run and to view network settings. The ***Pause*** and ***Continue*** buttons of the Instrument display can be used to control an ongoing method run.

This section describes the location and function of the Instrument display.

Location and illustration

The following illustration shows the location and a detailed view of the instrument display.

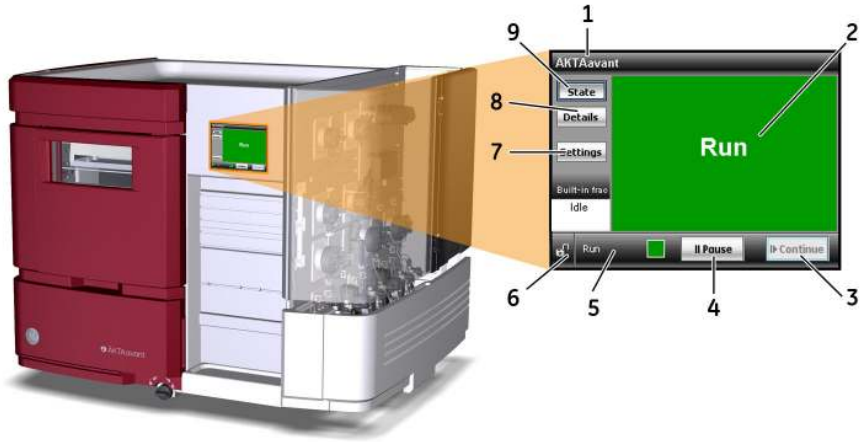

Part	Description
1	System name
2	Information area. This example shows the ***State*** window.
3	***Continue*** button. Tap to continue the run after, for example, a pause.
4	***Pause*** button. Tap to pause a run.
5	The name of the current system state. The state is shown even if another message or view is shown in the information area.
6	Lock/Unlock indicator. Indicates if the ***Pause*** and ***Continue*** buttons are locked or unlocked. Locking is set in UNICORN in ***System Control***.

Part	Description
7	***Settings*** button. Tap to display the ***Settings*** window with system parameters.
8	***Details*** button. Tap to display the ***Details*** window with parameters and data for the ongoing run.
9	***State*** button. Tap to display the ***State*** window with the current system state, both in text and color.

Function of the instrument display

Three different types of information can be displayed:

- State of the system
- Details of the run
- Network settings

State window

Tap ***State*** to view the ***State*** window. The ***State*** window displays the current state of the system. Information about the built-in fraction collector is displayed in the lower left frame for each state.

The table below describes the different states that can be displayed.

State	Display	Description
Not connected		The instrument has no communication with the Instrument server.
Connecting		The system is starting up.

State	Display	Description
Ready		The instrument is ready to use.
Run		A run is ongoing. ***Idle*** is displayed when the built-in fraction collector is not in use. ***Deselected*** is displayed when the built-in fraction collector is not selected in the instrument configuration.
Run with fractionation ongoing		A run, and fractionation, is ongoing. Do *not* open the Frac drawer during fractionation.
Wash		A wash instruction or a pump synchronization is ongoing.
Manual pause		A run has been paused by the user.
System pause		A run has been paused by UNICORN.

State	Display	Description
Hold	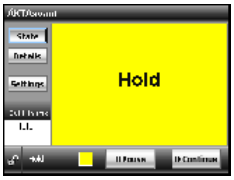	A method is put on hold by UNICORN, or by the user.
Alarms and errors		The system is paused due to an alarm. To resume the run, acknowledge the alarm and continue the run in UNICORN.

Details window

Tap ***Details*** to view the ***Details*** window.

The ***Details*** window shows run data for the ongoing run. This window can be convenient to use when the computer is not located beside the instrument. The instrument can for example be located in a cold room.

The ***Details*** window has two tabs. The ***Volumetric*** tab shows the flow in ml/min, and the ***Linear*** tab shows the flow in cm/h. The other parameters are presented in the same way in both tabs.

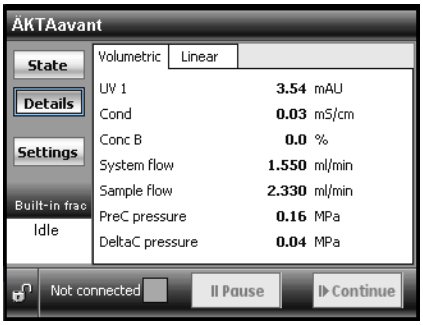

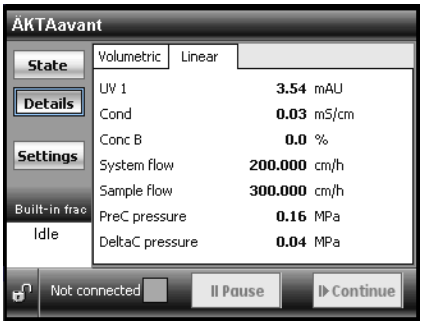

Settings window

Tap ***Settings*** to display the ***Settings*** window.

The ***System parameters*** tab shows the system parameters, for example network settings. This information can be useful in contact with service or local IT support. Default values are set on delivery. To change the values, tap ***Edit***. For information about network settings, see *UNICORN Administration and Technical Manual*.

Note: *The **Edit** button is enabled only when the system is in state **Not connected**.*

The ***Touchscreen*** tab shows an instruction on how to calibrate the touchscreen.

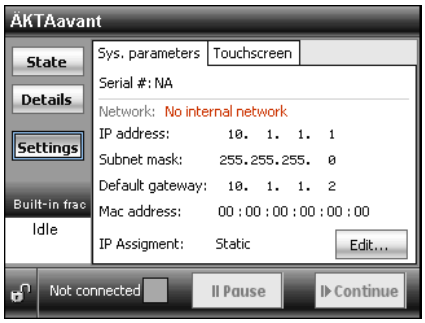

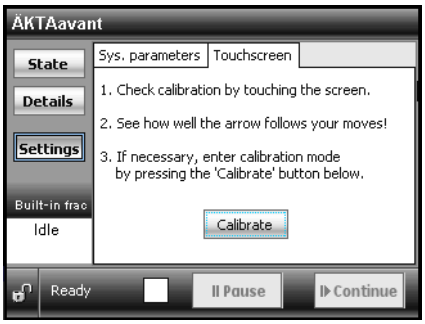

Buttons and indicators

The Instrument display includes the following buttons and indicators:

Indicator/Button	Description
	Indicates if the Instrument display buttons are unlocked or locked. The buttons can be locked from UNICORN ***System Control***.
	Pauses the run and stops all pumps.
	Resumes instrument operation from the following states: • ***Wash*** • ***Pause*** • ***Hold***

Lock/Unlock function

Follow the instruction to lock or unlock the ***Pause*** and ***Continue*** buttons of the Instrument display from UNICORN.

Step	Action
1	In ***System Control***, on the ***System*** menu, click ***Settings***. *Result:* The ***System Settings*** dialog box box opens.
2	In the ***System Settings*** dialog box: • Select ***Advanced:Instrument display***. • Click ***Locked*** or ***Unlocked***. • Click ***OK***.

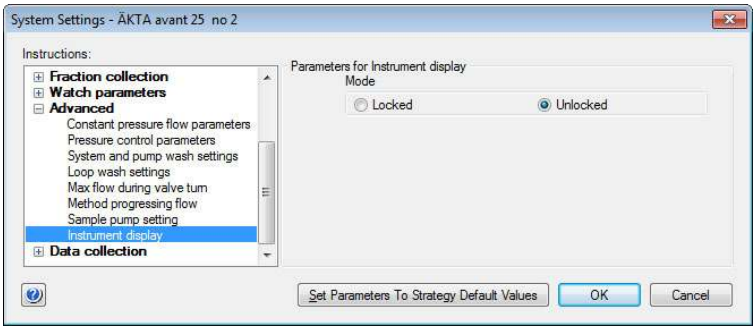

2.6 Accessories

About this section

A number of holders are available for attaching columns, bottles and tubing to the ÄKTA avant instrument. The holders are attached to the instrument using the holder rails on the front and wet side of the instrument.

Optional modules can be installed on the instrument outside the system chassis when using an Extension box.

This section describes the available holders, other accessories and the Extension box.

In this section

This section contains the following subsections:

Section	See page
2.6.1 Column holders	42
2.6.2 Tubing holders and other accessories	46
2.6.3 Extension box	51

2.6.1 Column holders

Column holder

The Column holder has one position for medium sized columns and one position for small sized columns. It can be used for columns with outer diameter between 10 and 50 mm.The Column holder can also be used for bottles. Use two holders to attach long columns.

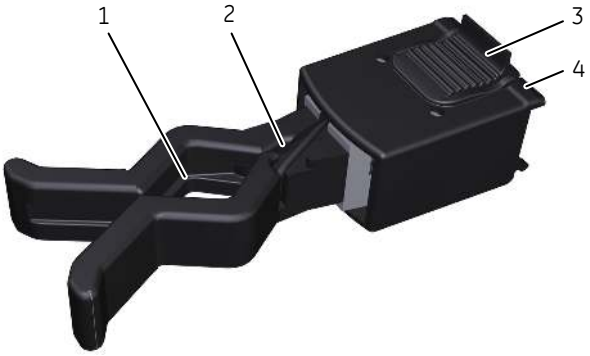

Part	Description
1	Position for a medium sized column or bottle
2	Position for a small sized column
3	Tab
4	Snap-in to holder rails

Column clamp

The column clamp can be used to attach small sized columns with outer diameters between 10 and 21 mm. Use two clamps to attach long columns.

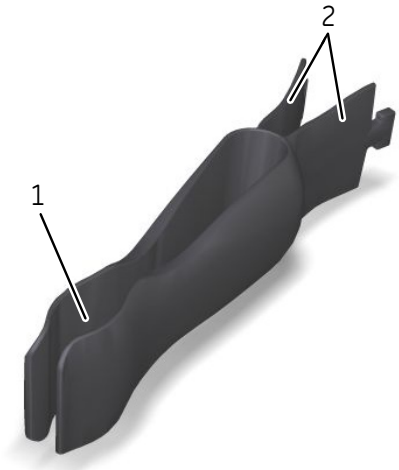

Part	Description
1	Position for a column
2	Inner end tabs

Column holder rod

The Column holder rod can be used to attach several HiTrap™ columns. The holder has threaded ports for HiTrap columns and tubing connectors. Push the button of the holder to attach the holder to a holder rail.

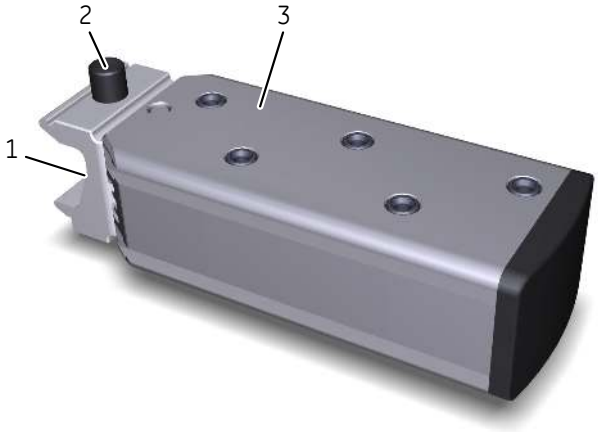

Part	Description
1	Snap-in to holder rails
2	Button
3	Column holder rod

Flexible column holder

The Flexible column holder can be used to attach, for example, HiScreen columns.

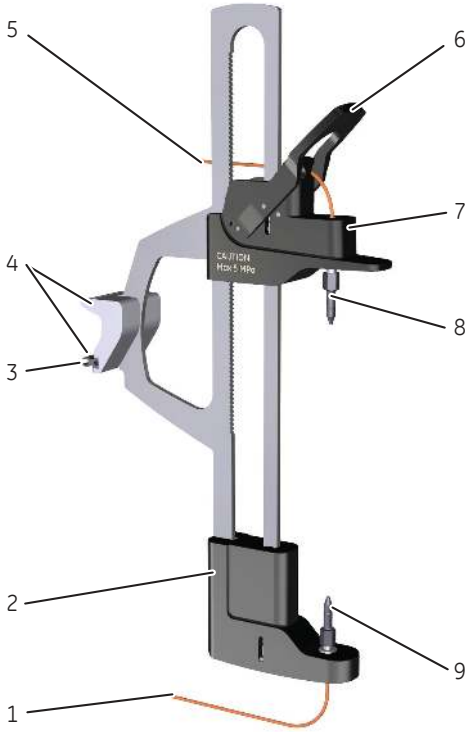

Part	Function
1	Lower tubing
2	Lower part
3	Snap-in-strips
4	Attachment part
5	Upper tubing
6	Lever
7	Upper part
8	Upper connector
9	Lower connector

2.6.2 Tubing holders and other accessories

Tubing holder spool

The Tubing holder spool is used to hold and arrange tubing. It is available in two versions; one for small tubing (o.d. 1/8" and smaller) and one for large inlet tubing (o.d. 3/16") for AKTA avant 150.

The following illustration shows the Tubing holder spool for small tubing.

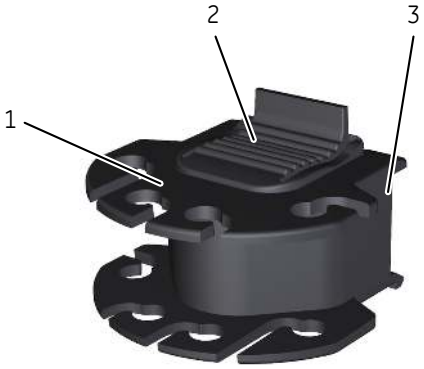

Part	Description
1	Positions for tubing
2	Tab
3	Snap-in to holder rails

Tubing holder comb

The Tubing holder comb is used to hold and arrange tubing.

Part	Description
1	Positions for tubing
2	Tab
3	Snap-in to holder rails

Bottle holder

The Bottle holder is used for holding bottles. For example, the Bottle holder can be attached to the holder rails below the Instrument display to hold a sample bottle.

Part	Description
1	Position for bottle
2	Snap-in to holder rails

Adapter for air sensor

The air sensor adapter is used to hold an external air sensor.

The air sensor with adapter is connected to the Bottle holder, see the following illustrations.

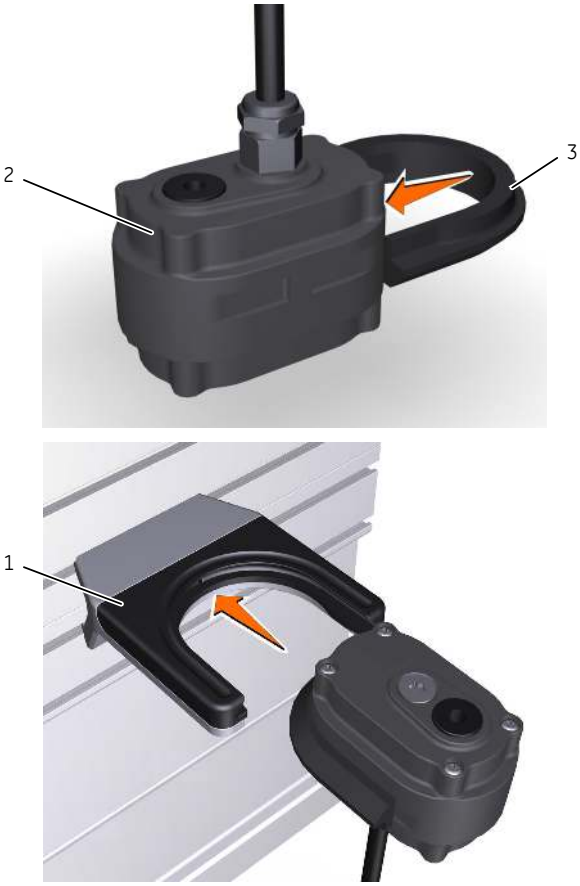

Part	Description
1	Bottle holder
2	Air sensor
3	Adapter for air sensor

Rail extension

The Rail extension rod can be used to attach accessories, for example column holders or a Multi-purpose holder. The rod has extra rails on both sides. Push the button of the rod to attach it to a holder rail.

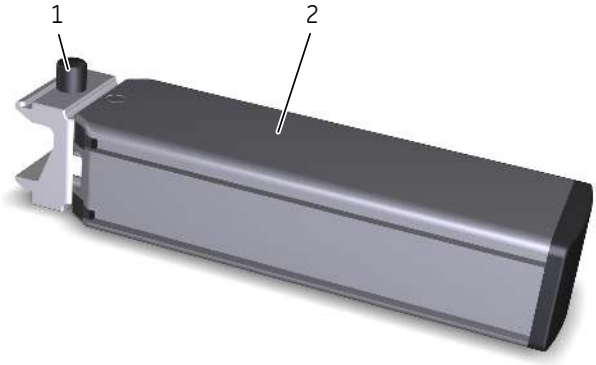

Part	Function
1	Button
2	Extension rod

Multi-purpose holder

The Multi-purpose holder can be used to attach accessories, for example a Loop holder or a cassette. Attach the holder to a holder rail.

Part	Function
1	Attachment point for accessories
2	Snap-in to holder rails
3	Attachment points for tubing holders
4	Tab

Loop holder

The Loop holder can be used to attach up to five 10 ml sample loops. Use two Multi-purpose holders to attach the holder to a holder rail.

Part	Function
1	Upper attachment to multi-purpose holder
2	Lower attachment to multi-purpose holder

2.6.3 Extension box

Description

The Extension box can be used to install extra modules on the ÄKTA avant instrument outside the system chassis. It is possible to install up to three extension boxes with extra modules when using ÄKTA avant.

Location

The Extension box can be mounted in two ways.

- Standing on top of or next to ÄKTA avant.
- On a Rail extension rod.

Note: *The hanger of the extension box is located on the right or left side of the box depending on where the removable extension box front (and back) is attached.*

Illustration of Extension box

This illustration shows the front and the back of the Extension box.

Part	Function
1	Front
2	Front screw
3	Module screw hole

Part	Function
4	Feet
5	Back screw
6	Back
7	Hanger

Compatible instrument modules

The following instrument modules can be placed in the Extension box:

- Any V9 or V9H valve
- Mixer (M9)
- UV monitor (U9-L)
- Conductivity monitor (C9n)

3 Standard instrument modules

About this section

This section describes the design and main functions of the instrument modules installed in ÄKTA avant at delivery.

In this section

This section contains the following subsections:

Section	See page
3.1 Pumps	54
3.2 Mixer	58
3.3 Valves, overview	60
3.4 Inlet valves	62
3.5 Injection valve	68
3.6 Column valve	71
3.7 Outlet valve	74
3.8 Pressure monitors	76
3.9 pH valve and pH monitor	78
3.10 Built-in fraction collector	81
3.11 UV monitor	94
3.12 Conductivity monitor	96

3.1 Pumps

Introduction

The ÄKTA avant instrument is fitted with three high precision pumps. There are two system pumps, System pump A and System pump B, and one Sample pump. The system pumps can be used individually, or in combination to generate isocratic or gradient elution in purification methods. The Sample pump is dedicated for direct loading of sample onto a column, or for filling of sample loops.

This section describes the pumps and their functions, and also the pump piston rinsing systems.

Function of the pumps

Each pump module consists of two pump heads. The individual heads are identical but actuated in opposite phase to each other by individual stepper motors, controlled by a microprocessor. The two pistons and pump heads work alternately to give a continuous, low pulsation, liquid delivery.

To ensure delivery of correct volume, the pumps must be free from air. The purge valve on each of the pump heads is used to remove air. For instruction on how to purge the pumps, see *Section 5.4 Prime inlets and purge pump heads, on page 163*.

The following table contains the operating limits and labels of the system pumps of ÄKTA avant 25 and ÄKTA avant 150, respectively.

Configuration	Label	Pump type	Flow rate	Max. pressure
ÄKTA avant 25	**P9 A** and **P9 B**	P9	0.001 to 25 ml/min ***Note:*** *When running the **Column packing flow** instruction, the maximum flow rate is 50 ml/min.*	20 MPa
ÄKTA avant 25	**P9-S**	P9-S	0.01 to 50 ml/min	10 Mpa

Configuration	Label	Pump type	Flow rate	Max. pressure
ÄKTA avant 150	**P9H A** and **P9H B**	P9H	0.01 to 150 ml/min ***Note:*** *When running the **Column packing flow** instruction, the maximum flow rate is 300 ml/min.*	5 MPa
ÄKTA avant 150	**P9H S**	P9H	0.01 to 150 ml/min	5 MPa

Location and illustration of pumps

The illustration below shows the location of the Sample pump, System pump A, and System pump B. An enlargement of one of the System pumps is also shown.

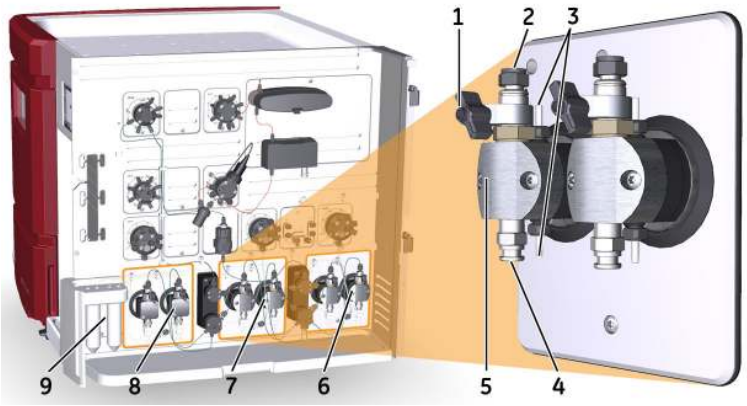

Part	Description
1	Purge valve: Used to remove air from the pump
2	Check valve: Non-return check valves at the outlet port

Part	Description
3	Connections to pump piston rinsing system: Tubing is connected between the pumps and the Pump piston rinsing system tubes (9)
4	Check valve: Non-return check valves at the inlet port
5	Pump head: Encapsulates the inner parts of the pump
6	System pump B
7	System pump A
8	Sample pump
9	Pump piston rinsing system tubes

The pump piston rinsing system

A seal prevents leakage between the pump chamber and the drive mechanism. The seal is continuously lubricated by the presence of eluent. The pump piston rinsing system continuously flushes the low pressure chamber behind the piston with a low flow of 20% ethanol prepared in deionized water or equivalent. This prevents any deposition of salts from aqueous buffers on the pistons and prolongs the working life of the seals.

The pump piston rinsing system tubing is connected to the rearmost holes on the pump heads.

For instructions on how to fill the rinsing systems, see *Section 7.3.1 Change pump rinsing solution, on page 270*.

Illustration of the pump piston rinsing systems

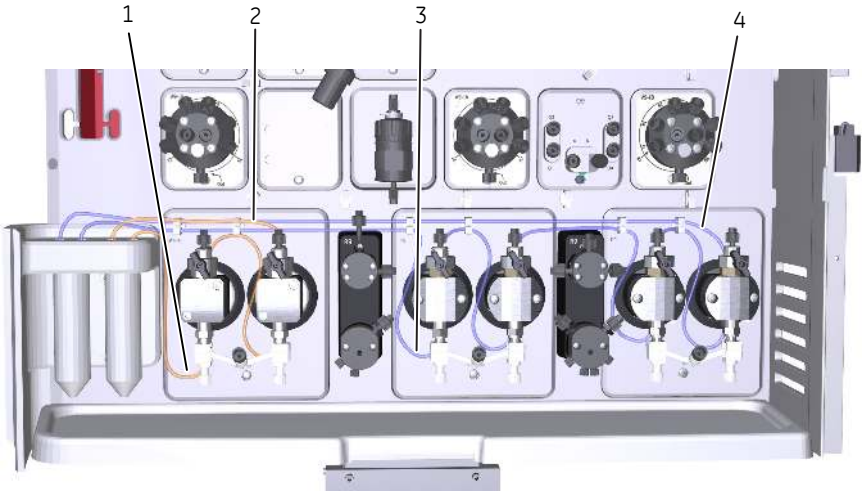

Part	Description
1	Inlet tubing to the sample pump piston rinsing system
2	Outlet tubing from the sample pump piston rinsing system
3	Inlet tubing to the system pump piston rinsing system
4	Outlet tubing from the system pump piston rinsing system

3.2 Mixer

Introduction

The Mixer is located after System pump A and System pump B and before the Injection valve. The purpose of the Mixer is to make sure that the buffers from the System pumps are mixed to give a homogenous buffer composition. The Mixer has a built-in filter that prevents impurities from reaching the column. For instructions on how to replace the filter, see *Section 7.8.7 Replace the inlet filters, on page 345*.

NOTICE

Do not run the system with the mixer attached to the instrument if no tubing is connected to the mixer. Running the mixer without liquid in the mixer chamber causes excessive wear of the magnet in the mixer chamber.

Location and illustration of the Mixer

The following illustration shows the location of the Mixer, and also an enlargement of the Mixer. In both ÄKTA avant 25 and ÄKTA avant 150 the Mixer is labelled **M9**.

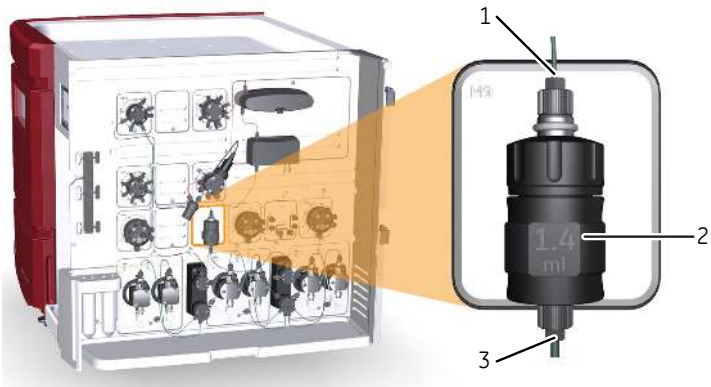

Part	Description
1	Outlet
2	Mixer chamber
3	Inlet

3.3 Valves, overview

Introduction

The valves of the ÄKTA avant system allow flexibility in the liquid flow path.

This section provides an overview of the valves included in a standard equipped ÄKTA avant system.

General design and function of rotary valves

All valves on the ÄKTA avant instrument, except for the Quaternary valve, are rotary valves. The motorized rotary valve consists of a valve connection block with a number of defined bores with channels to the inlet and outlet ports of the valve. The rotary disc, mounted on the motor, has a number of defined channels. The pattern of channels of the Rotary disc together with the pattern and location of the ports of the valve connection block, define the flow path and function of each type of valve. When the rotary disc turns, the flow path in the valve changes.

Illustration of inlet valve components

The following illustration shows the components of a disassembled Inlet valve A or a disassembled Inlet valve B.

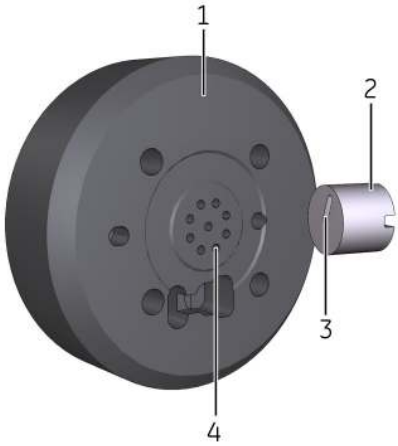

Part	Description
1	Valve connection block
2	Rotary disc
3	Defined channel(s) in the rotary disc
4	Defined bores in the valve connection block

Note: *Inlet and outlet ports are not visible in the picture. They are located on the opposite side of the Valve connection block.*

3.4 Inlet valves

Introduction

The inlet valves are used to select which buffers or samples to use in a run.

Inlet valve A is located before System pump A, Inlet valve B is located before System pump B, and the Sample inlet valve is located before the Sample pump. Inlet valve A and Inlet valve B are connected to the Quaternary valve. The Quaternary valve is used for automatic buffer preparation in ***BufferPro***, and for formation of quaternary gradients.

The number of inlets can be increased by installing extra inlet valves. For information on how to install extra valves, please refer to *Section 4.1 System extension overview, on page 99*.

This section describes the location and function of the inlet valves.

Location and illustration of inlet valves

The following illustration shows the location of the inlet valves and also enlargements of Inlet valve A and the Quaternary valve.

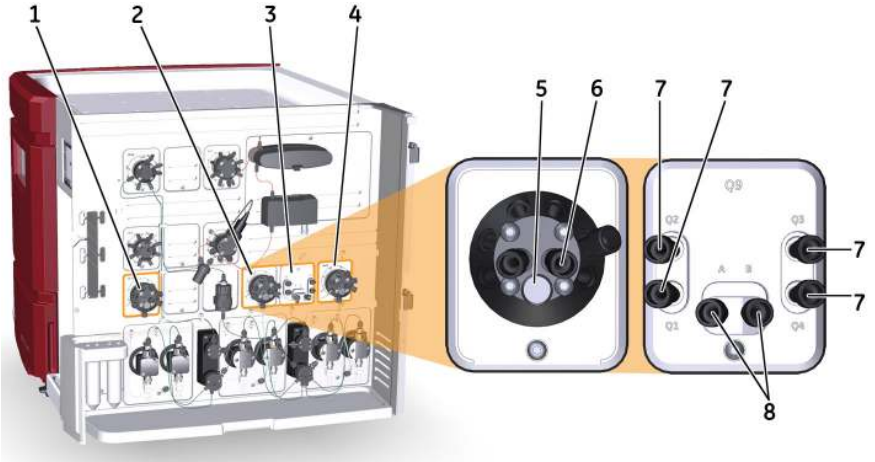

Part	Description	Label in	
		ÄKTA avant 25	ÄKTA avant 150
1	Sample inlet valve	**V9-IS**	**V9H-IS**
2	Inlet valve A	**V9-IA**	**V9H-IA**

Part	Description	Label in	
		ÄKTA avant 25	ÄKTA avant 150
3	Quaternary valve	**Q9**	**Q9**
4	Inlet valve B	**V9-IB**	**V9H-IB**
5	Integrated air sensor (behind the plug)	NA	NA
6	Inlet ports of Inlet valve A	**A1** to **A7**	**A1** to **A7**
7	Inlet ports **Q1**-**Q4** of Quaternary valve	**Q1** to **Q4**	**Q1** to **Q4**
8	Outlet ports from Quaternary valve to Inlet valve A and Inlet valve B	**A** and **B**	**A** and **B**

Function of Inlet valve A and Inlet valve B

Inlet valve A and Inlet valve B enable automatic changing between different buffers and wash solutions, and can be used to generate gradients by mixing buffer from Inlet valve A and buffer from Inlet valve B.

The air sensors integrated in Inlet valve A and Inlet valve B can be used to prevent introduction of air into the pumps and columns. For information on how to change settings and parameters for the use of air sensors, see *Chapter 5 Operation, on page 153*.

The ***Run Data*** for air sensors shows the status of the air sensor. If an alarm is triggered and then acknowledged, the ***Run Data*** will be reset to ***No Air*** even if there still is air in the sensor. When the flow starts another alarm will go off if air is still present.

Air sensor sensitivity

The air sensor sensitivity can be set to two values. ***Normal*** is used to detect when a buffer or sample vessel is empty. ***High*** is used to detect small air bubbles.

Parameter	Air volume detected		Usage
	ÄKTA avant 25	ÄKTA avant 150	
Normal (default)	30 µl	100 µl	Detect empty buffer/sample vessels

Parameter	Air volume detected		Usage
	ÄKTA avant 25	ÄKTA avant 150	
High	10 µl	30 µl	Detect even small air bubbles

Ports of Inlet valve A and Inlet valve B

The following illustration shows the ports of Inlet valve A and Inlet valve B.

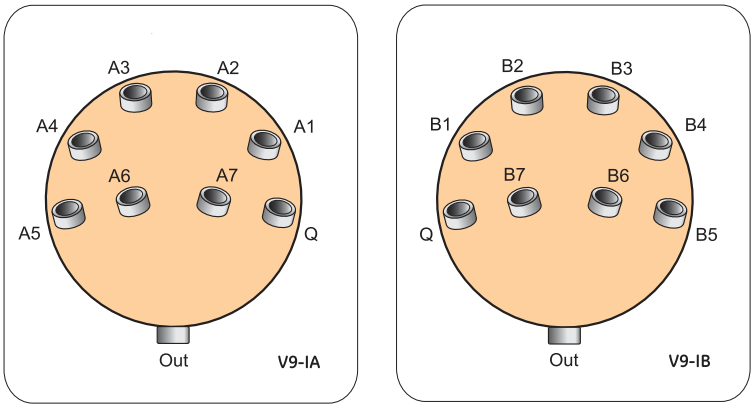

Port	Description	Port	Description
A1-A7	Buffer inlets of Inlet valve A	**Q**	Inlet from Quaternary valve
B1-B7	Buffer inlets of Inlet valve B	**Out**	To the System pumps

Function of Quaternary valve

The Quaternary valve is used for automatic mixing of four different solutions. The Quaternary valve opens one inlet port at a time, and the different solutions are mixed in the Mixer to form the desired buffer. The opening time in the switching valve is controlled by the system.

The volume for each inlet port opening increases stepwise when the flow increases. To obtain a homogeneous buffer composition, make sure to use a mixer chamber volume suitable for the flow rate of the method. For further information, see *Select Mixer chamber, on page 155*.

Current mixing percentage for **Q1**-**Q4** are shown in ***Process Picture*** in ***System Control***. The curves for **Q1**-**Q4** can be shown in a chromatogram and stored in the result data for documentation and for further studies in ***Evaluation***.

Ports of Quaternary valve

The following illustration shows the ports of the Quaternary valve.

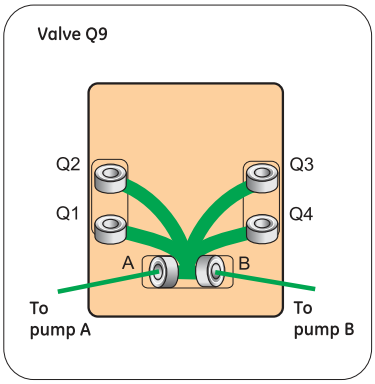

Port	Description
Q1-**Q4**	Buffer inlets
A	Outlet to System pump A via Inlet valve A
B	Outlet to System pump B via Inlet valve B

BufferPro

The ***BufferPro*** tool allows automatic mixing of buffers during a run. Buffer preparation can be performed using corresponding acid/base buffer systems. Buffer system, concentration, pH and salt gradient are defined in the ***Method Editor***.

Note: *In ÄKTA avant 25* ***BufferPro*** *can be run at flow rates up to 25 ml/min. In ÄKTA avant 150* ***BufferPro*** *can be run at flow rates up to 40 ml/min.*

When using ***BufferPro***, immerse the Q inlets in the solutions according to the following table.

Inlet	Solution	Inlet	Solution
Q1	Buffer stock solution	**Q3**	Water
Q2	Acid or base	**Q4**	Gradient salt stock solution

Quaternary gradients

The Quaternary valve can be used to create a gradient using four different solutions simultaneously in any combination. The percentage of each solution is controlled by instructions in the method. It is possible to form gradients that changes the percentage of two, three or four solutions linearly over time. This is useful when advanced methods are developed.

Note: *In ÄKTA avant 25 Quaternary gradients can be created at flow rates up to 25 ml/min. In ÄKTA avant 150 Quaternary gradients can be created at flow rates up to 40 ml/min.*

Function of Sample inlet valve

The Sample inlet valve enables automatic loading of different samples when using the Sample pump to inject sample directly onto the column or to fill a sample loop.

The Sample inlet valve has an inlet dedicated for buffer. This **Buff** inlet is used in methods to fill the Sample pump with solution before sample is introduced. The **Buff** inlet is also used to wash the Sample pump with buffer between runs.

The air sensor integrated in the Sample inlet valve is used when sample is applied from a vessel onto a column by selecting ***Inject all sample using air sensor*** in the ***Sample application*** phase of a method. This function uses the **Buff** inlet to finalize sample injection and to remove air from the Sample pump.

Ports of Sample inlet valve

The following illustration shows the ports of the Sample inlet valve.

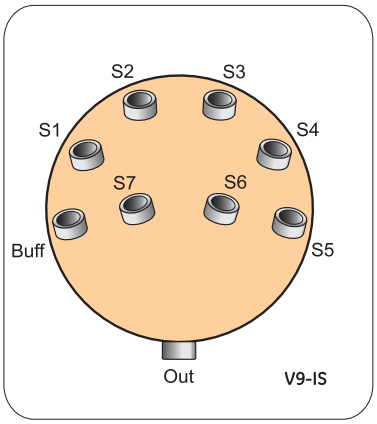

Port	Description
S1-S7	Sample inlets
Buff	Buffer inlet
Out	To Sample pump

3.5 Injection valve

Function of the Injection valve

The Injection valve is used to direct sample onto the column. The valve enables usage of a number of different sample application techniques.

The Injection valve is labeled **V9-Inj** for ÄKTA avant 25 and **V9H-Inj** for ÄKTA avant 150.

A sample loop or a Superloop™ can be connected to the Injection valve and filled either automatically using the Sample pump or manually using a syringe. The sample can also be injected directly onto the column using the Sample pump.

For instructions on how to connect and use sample loops, see *Section 5.7 Sample application, on page 187*.

Location and illustration of Injection valve

The following illustration shows the location, together with a detailed view of Injection valve **V9-Inj**.

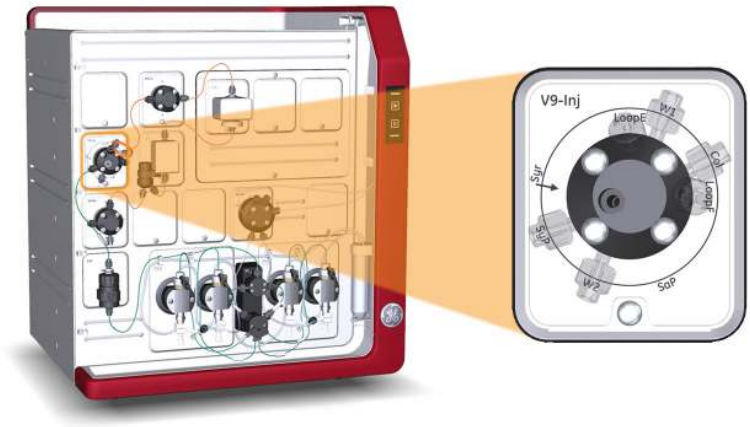

Ports and flow paths of the Injection valve

The illustration and tables below describe the ports of and different flow paths through the Injection valve.

The Injection valve can be set to different positions that give different flow paths through the valve.

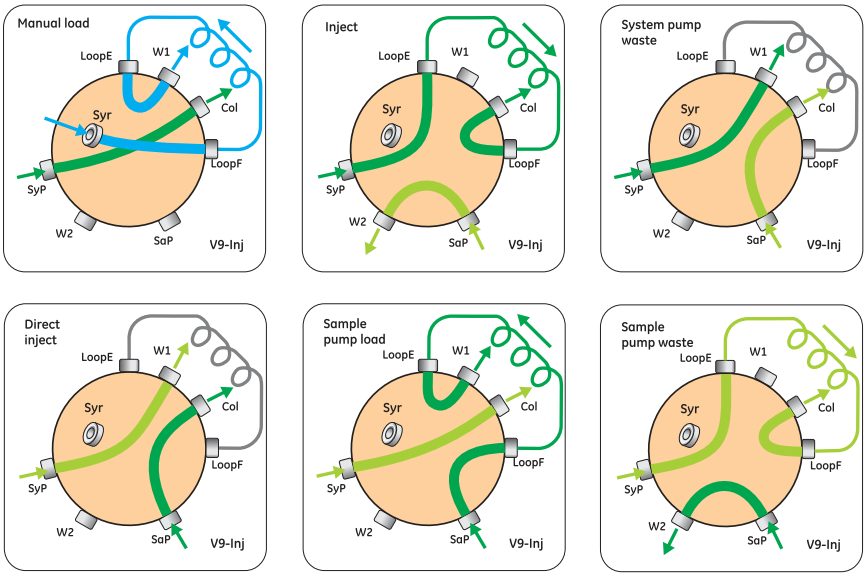

Primary flow path

Alternative flow path

Flow path for manual load

Closed flow path

Port	Description
SaP	Inlet from sample pump
SyP	Inlet from the System pumps via the Mixer
Syr [1]	Syringe connection
Col	Outlet to the Column valve.
LoopF	Port for connection of a loop or a Loop valve. Used to fill a loop.

Port	Description
LoopE	Port for connection of a loop or a Loop valve. Used to empty a loop into the flow path.
W1	Loop and System pump waste
W2	Sample flow waste

1 For larger sample volumes connect the syringe with the help of a union Luer female to 1/16" male (default). For smaller volumes it it recommended to use the Fill port INV-907 (18-1127-66) and connect a syringe with needle.

Flow path	Description
Manual load - Default position of the valve	The system flow is directed onto the column or column valve. Sample can be manually injected into the loop. Excess sample leaves the valve through waste port **W1**.
Inject	The system flow is directed through the loop and onto the column or column valve. If the sample pump is used, the flow entering the **SaP** port is directed to waste port **W2**.
System pump waste	The system flow is directed to waste port **W1**. If the sample pump is used, the flow entering the **SaP** port is directed to the column valve.
Direct inject	The flow entering the **SaP** port is directed to the column valve. This position is used with the sample pump. Flow entering the **SyP** port is directed to waste port **W1**.
Sample pump load	The flow entering the **SaP** port is directed to the loop. This position is used with the sample pump. Excess sample leaves the valve through waste port **W1**. The flow entering the **SyP** port is directed to the column or the column valve.
Sample pump waste	The flow entering the **SaP** port is directed to waste port **W2**. This position is used with the sample pump. The flow entering the **SyP** port is directed to the column via the loop.

Note:

- *In order to avoid sample carry-over when switching techniques for loading samples, wash the Injection valve with buffer between the loading of two different samples. For example, when switching from loading sample onto the loop to loading sample directly onto the Column with the valve in **Direct inject** position.*
- *Make sure that the **SaP** port is plugged with a stop plug if the Sample Pump is not connected.*

3.6 Column valve

Introduction

The Column valve is used for connection of columns to the system, and to direct the flow onto the column. Up to five columns can be connected to the Column valve simultaneously. The valve also has a built-in by-pass function that enables by-passing of connected columns.

Pressure monitors that measure the actual pressure over a column are integrated into the inlet and outlet ports of the Column valve. For further information on the pressure monitors, see *Section 3.8 Pressure monitors, on page 76*.

The number of column positions can be increased by installing an extra Column valve. For information on how to install extra valves, please refer to *Section 4.1 System extension overview, on page 99*.

Location and illustration of the Column valve

The following illustration shows the location of the Column valve and also an enlargement of the Column valve with connected columns. In ÄKTA avant 25, the Column valve is labelled **V9-C**. In ÄKTA avant 150, the Column valve is labelled **V9H-C**.

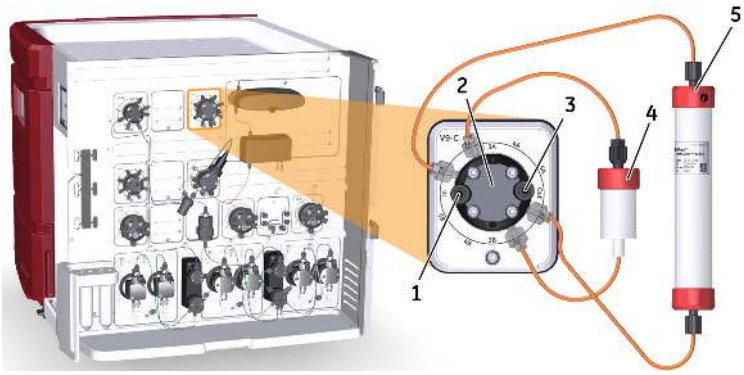

Part	Function
1	Inlet port with built-in pressure sensor
2	Column valve
3	Outlet port with built-in pressure sensor
4	HiTrap™ column connected to ports **2A** and **2B**

Part	Function
5	HiPrep™ column connected to ports **1A** and **1B**

Ports and flow paths of the Column valve

The following illustration and tables describe the ports of and flow paths through Column valves **V9-C** and **V9H-C**.

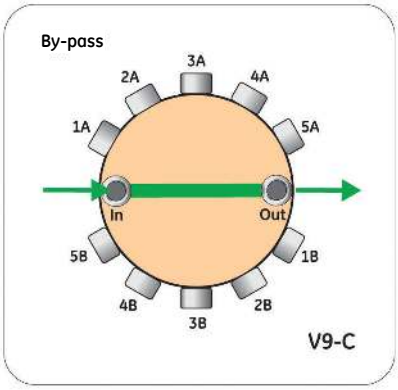

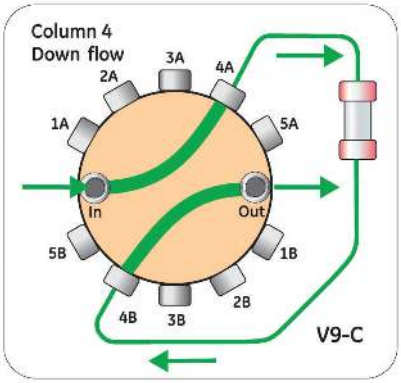

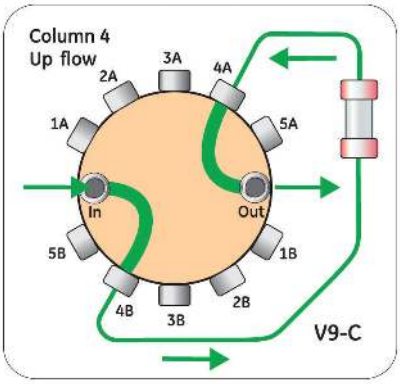

Port	Description
In	Inlet from Injection valve via a built-in pressure monitor.
1A-5A	Ports for connection to the top of columns.
1B-5B	Ports for connection to the bottom of columns.
Out	Outlet to UV monitor via a built-in pressure monitor.

Flow path	Description
By-pass	The flow by-passes the column(s). ***By-pass*** is the default flow path.
Down flow	The flow direction is from the top of the column to the bottom of the column. Down flow is the default flow direction.
Up flow	The flow direction is from the bottom of the column to the top of the column.

Connect a column to the Column valve

Both top and bottom of each column shall be connected to the Column valve. The top of the column shall be connected to an A port (e.g., **1A**), and the bottom of the column shall be connected to the corresponding B port (e.g., **1B**). The flow direction can be set either from the top of the column to the bottom of the column, ***Down flow***, or from the bottom of the column to the top of the column, ***Up flow***. In the default flow path of the valve the column is by-passed.

3.7 Outlet valve

Function of the Outlet valve

The Outlet valve is used to direct the flow to the fraction collector, to an outlet port, or to waste. The Outlet valve enables collection of fractions. Fractions can be collected by using a fraction collector connected to the Outlet valve, or by using the 10 outlet ports. Usage of the outlet ports can be convenient when, for example, a limited number of large fractions is to be collected. If no fraction collection is needed, the Outlet valve can be set to direct the flow to waste.

Location and illustration of Outlet valve

The following illustration shows the location of the Outlet valve and also an enlargement of the valve. In ÄKTA avant 25, the Outlet valve is labelled **V9-O**. In ÄKTA avant 150, the Outlet valve is labelled **V9H-O**.

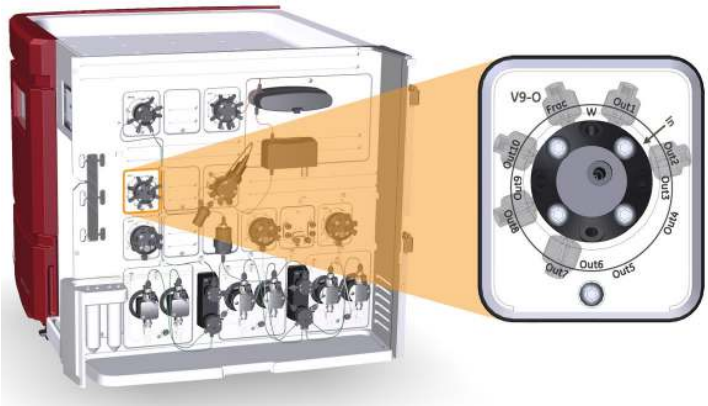

Ports of the Outlet valve

The following illustration shows the ports of the Outlet valve.

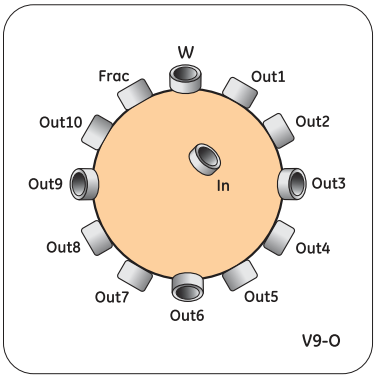

Port	Description
In	Inlet port
Frac	Port to fraction collector
Out1 - **Out10**	Outlet ports 1 - 10
W	Waste port

3.8 Pressure monitors

Introduction

Four pressure monitors are included in the ÄKTA avant system. Two pressure monitors are integrated in the Column valve, and two pressure monitors are connected to the pumps.

This section describes the location and function of the pressure monitors.

Location and illustration of the pressure monitors

The following illustration shows the location of the pressure monitors on the instrument, as well as a detailed view of the pressure monitors of the pumps. In both ÄKTA avant 25 and ÄKTA avant 150 the pressure monitors for the System pumps and Sample pump are labelled **R9**.

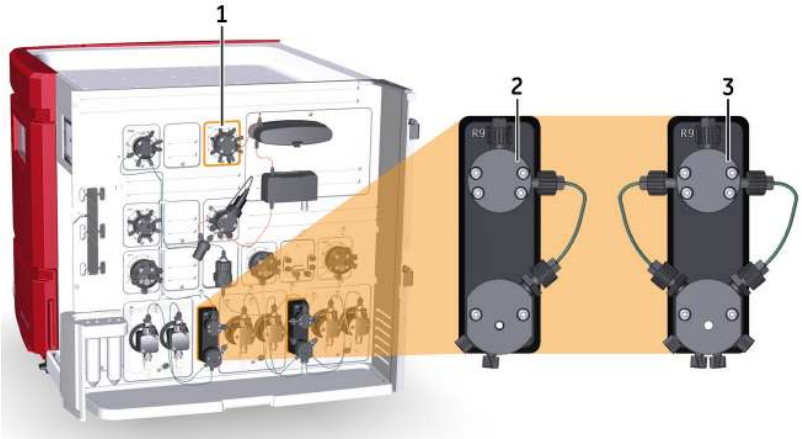

Part	Description
1	Column valve with built-in pre-column pressure monitor and post-column pressure monitor
2	Sample pump pressure monitor
3	System pump pressure monitor

Function of system and sample pump pressure monitors

The pressure monitor of the System pumps measures the system pressure after these pumps, called ***System pressure*** in UNICORN. The pressure monitor of the Sample pump measures the system pressure after this pump, called ***Sample pressure*** in UNICORN.

For instructions on how to calibrate the pressure monitors, see *Section 7.7.2 Calibrate the pressure monitors, on page 320*.

Function of pressure monitors integrated in the Column valve

The pressure monitors integrated in the inlet and outlet ports of the Column valves **V9-C** and **V9H-C** measure the pressure *just* before the column, pre-column pressure (A), and the pressure *just* after the column, post-column pressure (B).

The delta-column pressure (C), which is the pressure drop over the column, is calculated as the difference between the pre-column pressure and the post-column pressure.

Pressure alarms can be set for both the pre-column pressure and the delta-column pressure. Pressure control of the flow may be based on either the pre-column pressure or the delta-column pressure.

For instructions on how to calibrate the pressure monitors, see *Section 7.7.2 Calibrate the pressure monitors, on page 320*.

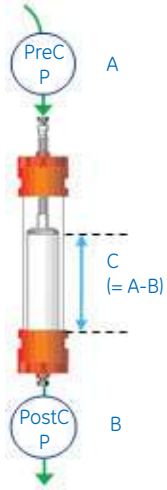

3.9 pH valve and pH monitor

Function of the pH valve

The pH valve is used to direct the flow to a pH electrode installed in the integrated flow cell when inline monitoring of pH is desired during a run. The pH valve is labeled **V9-pH** for ÄKTA avant 25 and **V9H-pH** for ÄKTA avant 150. The Flow restrictor is also mounted on the pH valve. The Flow restrictor gives a small back pressure which prevents air bubble formation in the detector flow cells. It is recommended to have it selected inline.

The valve directs the flow to the pH electrode and to the Flow restrictor, or by-passes one or both.

Location and illustration of pH valve

The following illustration shows the location of the pH valve, and also an enlargement of the valve. In ÄKTA avant 25, the pH valve is labelled **V9-pH**. In ÄKTA avant 150, the pH valve is labelled **V9H-pH**.

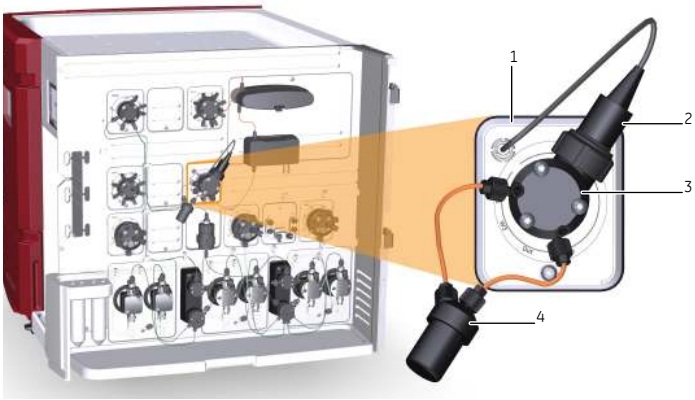

Part	Description	Part	Description
1	pH valve	2	pH electrode
3	pH flow cell	4	Flow restrictor

Ports and flow paths of the pH valve

The illustration and table below describe the different ports of and flow paths through the pH valve, in this example labeled **V9-pH**.

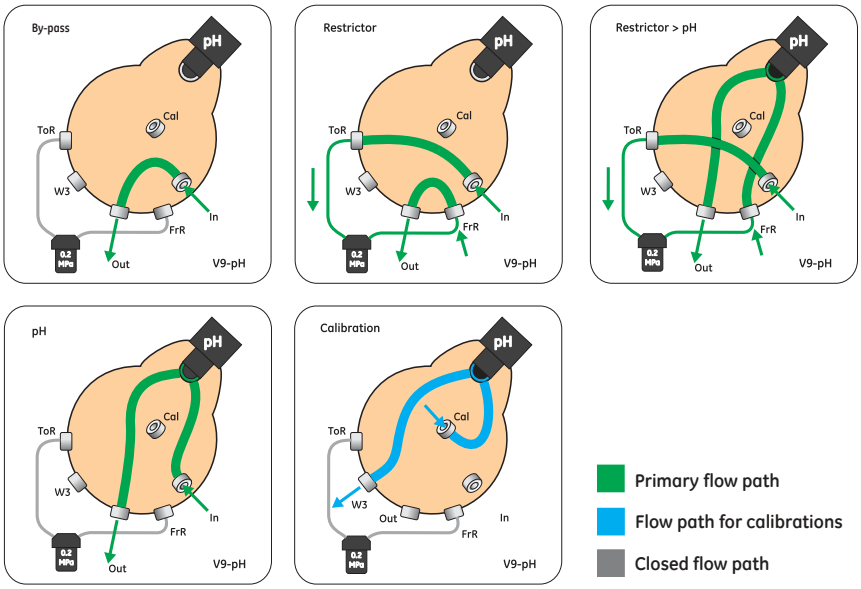

Port	Description
In	From Conductivity monitor
ToR	To Flow restrictor
FrR	From Flow restrictor
Out	To Outlet valve
Cal	Calibration port
W3	To Waste

Flow path	Description
By-pass	Both pH electrode and flow restrictor are by-passed.
Restrictor	Flow restrictor is in use and pH electrode is by-passed.

Flow path	Description
Restrictor and pH	Both pH electrode and Flow restrictor are in use.
pH	pH electrode is in use and Flow restrictor is by-passed.
Calibration	Flow path used when calibrating the pH monitor and when filling the pH flow cell with storage solution. The **Cal** port is used to inject solution into the flow cell using a syringe. Excess solution leaves the valve through port **W3**.

pH monitor

The pH monitor continuously measures the pH of the buffer and eluted proteins when the pH electrode is in-line. When pH monitoring is used, the pH monitor should be calibrated every day.

The pH monitor can be calibrated with the pH electrode installed in the pH valve. For instruction on how to calibrate the pH monitor, please refer to *Section 7.7.2 Calibrate the pressure monitors, on page 320*.

The following illustration shows the location of the pH flow cell and a pH electrode installed in the pH valve.

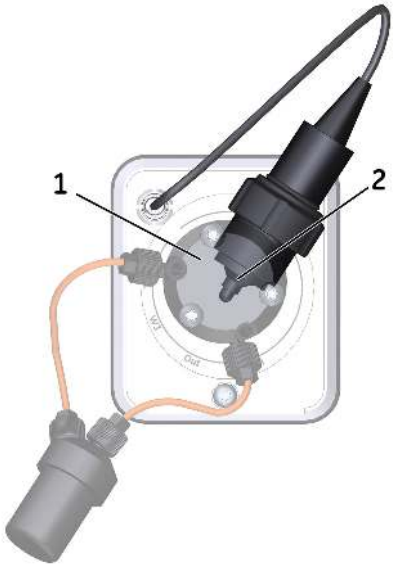

Part	Function
1	pH flow cell
2	pH electrode

3.10 Built-in fraction collector

About this section

This section describes the design and function of the built-in fraction collector.

In this section

This section contains the following sub sections:

Section	See page
3.10.1 Function	82
3.10.2 Illustrations of the built-in fraction collector	84
3.10.3 Cassettes, cassette tray and racks	87

3.10.1 Function

Introduction

ÄKTA avant has a built-in fraction collector for safe and clean handling of fractions. A cooling function protects the fractions from heat degradation.

Fractions can be collected in deep well plates and in tubes or bottles of different sizes. Up to six cassettes for deep well plates and tubes can be used. The cassettes can be used in any combination. Scanner functions identifies the types of cassettes and deep well plates that are used.

Tubes and deep well plates are placed in cassettes which in turn are placed on the cassette tray. The cassette tray is placed on the tray support. When the fraction collector drawer is closed the cassette tray is inserted into the fraction collector chamber. A height exclusion bar ensures that the tubes and deep well plates are correctly positioned and cannot damage the dispenser head.

Temperature control

The built-in fraction collector has a temperature control function that provides an option to set a desired fraction collector chamber temperature. The target temperature can be set to any whole value between 6°C and 20°C. The default value is 20°C. Settings for the temperature control function can be edited in the ***System Settings*** dialog box in ***System Control***, or in the ***Text Instructions*** pane in ***Method Editor***.

Note: *If the difference between the ambient temperature and the target temperature is too big, it might not be possible to reach the target temperature.*

Note: *If the temperature control function is turned off, the temperature in the fraction collector chamber will increase to a temperature higher than the ambient temperature.*

Note: *If the cooling unit is turned on for longer periods of time at higher humidity, there might be a buildup of ice inside the cooling unit. At higher humidity it is recommended to turn off the cooling off between runs and have the drawer open for ventilation.*

Tip: *The temperature in the fraction collector chamber can be viewed as a curve in the chromatogram.*

Scanning of cassettes

When the fraction collector drawer is closed automatic scanning is performed. There are two types of scanning procedures:

- ***Full scan:*** Scanning of cassette type codes to identify which cassette types are used, and scanning of rows and columns in deep well plates to identify which plate types are used (24, 48, or 96 wells). Full scan is performed only when the system is in state ***Ready***.
- ***Quick scan:*** Scanning of cassette type codes to identify which cassette types are used. Quick scan is performed during the run to ensure that correct cassettes are placed in the fraction collector.

Fractionation modes to avoid spillage

Two fractionation modes are available which avoid spillage between wells or tubes during fractionation:

- ***Accumulator:*** The accumulator is used to collect liquid during movement between wells, tubes or bottles. The liquid is then dispensed in the next well or tube. Fractionation with accumulator can be used at all flow rates.
- ***DropSync:*** When using ***DropSync*** the sensors in the dispenser head detect when a drop is released from the nozzle. The dispenser head moves to the next well or tube just after a drop is released. Fractionation with ***DropSync*** can be used at flow rates up to 2 ml/min. Solutions with low surface tension may require a lower flow.

Note: ***DropSync*** *is used in ÄKTA avant 25 only.*

Note: *If using the accumulator with buffers with high salt concentration, it is recommended to regularly use* ***Accumulator Wash*** *between or in methods.*

Fractionation arm positions

- ***Home position:*** The home position is used when the fraction collector is idle. The fractionation arm is positioned in the front of the interior of the fraction collector and the dispenser head is positioned over the waste funnel. This position is called ***Waste (Frac)*** in UNICORN.
- ***Frac cleaning position:*** The fraction collector cleaning position is used for convenient cleaning of the dispenser head. The fractionation arm is positioned in the front of the interior of the fractionation collector and the dispenser head is moved to the center of the fractionation arm.

3.10.2 Illustrations of the built-in fraction collector

Illustration of the built-in fraction collector exterior

The illustration below shows the main parts of the built-in fraction collector. A cassette tray with cassettes is placed in the fraction collector drawer.

Part	Description
1	Fractionation drawer
2	Fractionation window
3	Cassette tray with cassettes
4	Height exclusion bar
5	Fractionation drawer handle

Illustration of the built-in fraction collector interior

The illustration below shows the main parts of the fractionation chamber inside the fraction collector.

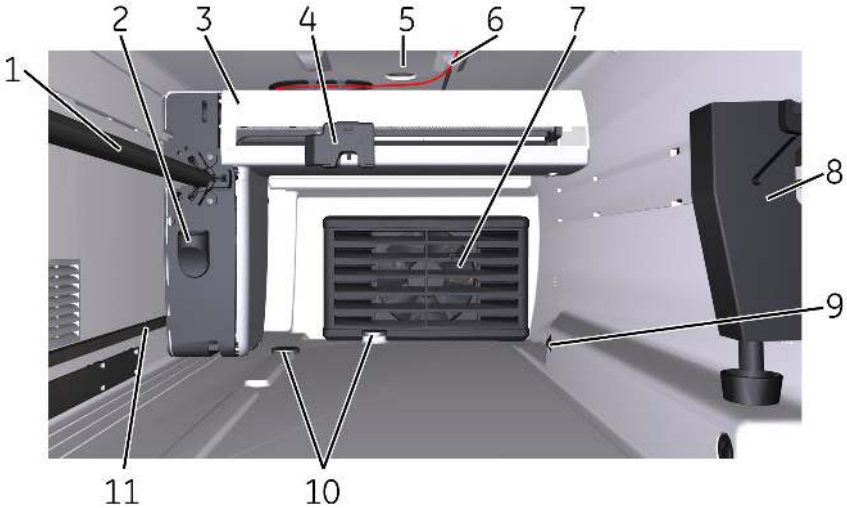

Part	Description
1	Fractionation arm main rail
2	Button cover
3	Fractionation arm
4	Dispenser head
5	Lamp (1 of 2)
6	Tubing from the Outlet valve
7	Cooling unit including circulation fan
8	Waste funnel
9	Tray aligning pins
10	Cassette tray positioning discs (2 of 3)
11	Fractionation arm guide rail

Illustration of the dispenser head

The illustration below shows the dispenser head of the fraction collector.

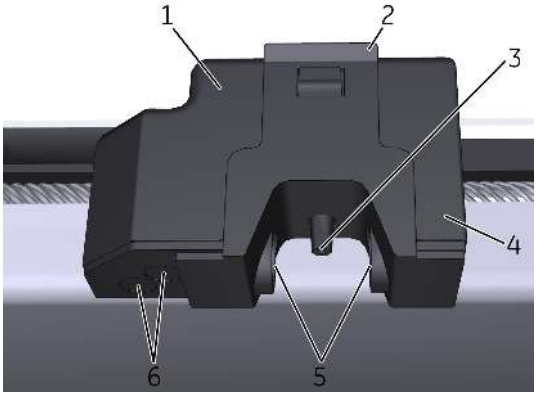

Part	Description
1	Dispenser head
2	Dispenser head cover
3	Nozzle
4	Accumulator (back part of Dispenser head)
5	DropSync sensor (only in ÄKTA avant 25)
6	Type code reader

3.10.3 Cassettes, cassette tray and racks

Introduction

Fractions can be collected in deep well plates and in tubes of different sizes. A number of cassettes and racks for different tubes and deep well plates are available. The cassettes are placed on a rack with six cassette positions. The cassette type codes are scanned by the cassette code reader to identify the cassette type.

Available cassettes, trays and racks

The following cassettes and racks are available:

- Cassette 3 ml tubes (for 40 tubes)
- Cassette 5 ml tubes (for 40 tubes)
- Cassette 8 ml tubes (for 24 tubes)
- Cassette 15 ml tubes (for 15 tubes)
- Cassette 50 ml tubes (for 6 tubes)
- Cassette for deep well plate (24, 48, 96 wells)
- Cassette tray (for six cassettes)
- Rack for 50 ml tubes (for 55 tubes)
- Rack for 250 ml bottles (for 18 bottles)

For information on dimension requirements for tubes and deep well plates to be used in the fraction collector, see *Fraction collector tubes and bottles, on page 91* and *Deep well plates, on page 92* respectively.

Illustrations of built-in fraction collector tray and racks

The illustrations below show the Cassette tray (for six cassettes), the Rack for 50 ml tubes and the Rack for 250 ml bottles.

The fronts of the tray and the racks are marked with the GE monogram.

In the cassette tray, the cassette positions are marked 1 to 6.

Cassette tray

Rack for 50 ml tubes

Rack for 250 ml bottles

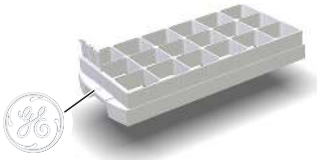

Note: *The tray and racks are inserted into the fraction collector with the GE monogram facing outwards.*

Note: *Do not use the cassette tray when a rack for tubes or bottles is placed in the fraction collector.*

Illustration of cassettes on the cassette tray

The illustration below shows cassettes placed on the cassette tray.

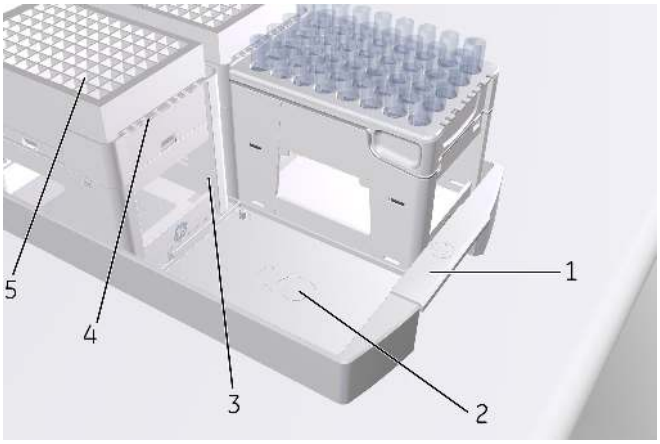

Part	Description
1	Cassette tray
2	Cassette position number
3	Cassette
4	Cassette type code
5	Tubes or deep well plates placed in a cassette

QuickRelease function

The cassettes for the smaller tube sizes (3, 5, 8, and 15 ml) have a built-in QuickRelease function. The QuickRelease function enables easy handling of tubes in the cassettes. With the QuickRelease device in lock position the tubes are fastened in the cassette and can easily be emptied. With the QuickRelease function in release position, the cassette can easily be loaded with tubes and used tubes can easily be discarded.

Step	Action
1	Load the cassette with tubes before fractionation: • Pull the QuickRelease device to the release position. • Load the cassette with tubes, and press the QuickRelease device to the locked position.
2	After fractionation, pull the QuickRelease device to the release position and remove the tubes containing the fractions you want.

Release position

Locked position

Step	Action
3	Empty and discard the remaining tubes: • Press the QuickRelease device to the lock position, and empty the remaining tubes. • Pull the QuickRelease device to the release position, and discard the tubes. 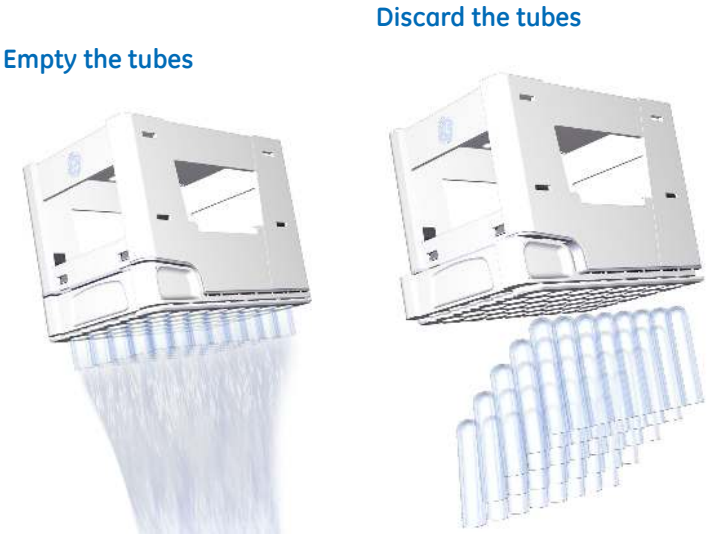

Fraction collector tubes and bottles

The tubes and bottles used in the built-in fraction collector must fulfill the requirements listed in the following table. Examples of manufacturers are also listed in the table.

Tube or bottle size (ml)	Diameter (mm)		Height (mm)		Examples of manufacturers
	Min.	Max.	Min.	Max.	
3	10.5	11.5	50	56	NUNC™
5	10.5	12	70	76	VWR™
8	12	13.3	96	102	BD™ Biosciences, VWR
15	16	17	114	120	BD Biosciences
50	28	30	110	116	BD Biosciences
250 ml bottle	L: 55 W: 55 [1]	L: 64.5 W: 64 [1]	-	121	Nalgene™, Kautex™

1 Length and width of the rectangular bottle base

Maximum flow rate

Fraction collection can be performed at different maximum flow rates depending on the size of the tubes and bottles that are used. The following table lists the maximum flow rates for the fraction collector tubes and bottles.

Tube or bottle size (ml)	Maximum flow rate (ml/min)
3	15
5	15
8	25
15	40
50	150
250 ml bottle	150

Deep well plates

Requirements

The deep well plates used in the Fraction collector of ÄKTA avant must fulfill the requirements listed in the table below.

Property	Specification
No. of wells	24, 48, or 96
Shape of wells	Square, not cylindrical
Well volume	10, 5, or 2 ml

Approved deep well plates

The plates listed in the table below are tested and approved by GE to be used with ÄKTA avant.

Plate type	Manufacturer	Part no.
96 deep well plate	GE	7701-5200 (Whatman™)
	BD Biosciences	353966
	Greiner Bio-One	780270
	Porvair Sciences	219009
	Seahorse Bioscience™	S30009
	Eppendorf™	951033405/ 0030 501.306
48 deep well plate	GE	7701-5500 (Whatman)
	Seahorse Bioscience	S30004
24 deep well plate	GE	7701-5102 (Whatman)
	Seahorse Bioscience	S30024

Maximum flow rate

Fraction collection can be performed at different maximum flow rates depending on what type of deep well plates that are used. The table below lists the maximum flow rates for the different plate types.

Plate type	Maximum flow rate (ml/min)
96 deep well plate	10
48 deep well plate	15
24 deep well plate	25

3.11 UV monitor

Introduction

This section describes the design and function of UV monitor **U9-M**. The module includes a monitor unit and a detector with a UV flow cell.

Function of the UV monitor

UV monitor **U9-M** measures the UV absorbance at a wavelength range of 190 to 700 nm.

The UV monitor is automatically calibrated every time the instrument is switched on.

A flip-mode enables measuring of UV/Vis absorbance at three wavelengths simultaneously during a run. The second and third wavelength can be turned off or on in method phase properties, by manual instructions or in system settings.

Note: *The resolution is decreased when more than one wavelength is used simultaneously due to lower sampling frequency per wavelength. Do not use more wavelengths than necessary.*

Location and illustration of UV monitor

The following illustration shows the location of the UV monitor and also an enlargement of the monitor unit and detector. In both ÄKTA avant 25 and ÄKTA avant 150 the monitor unit is labelled **U9-M** and the detector **U9-D**.

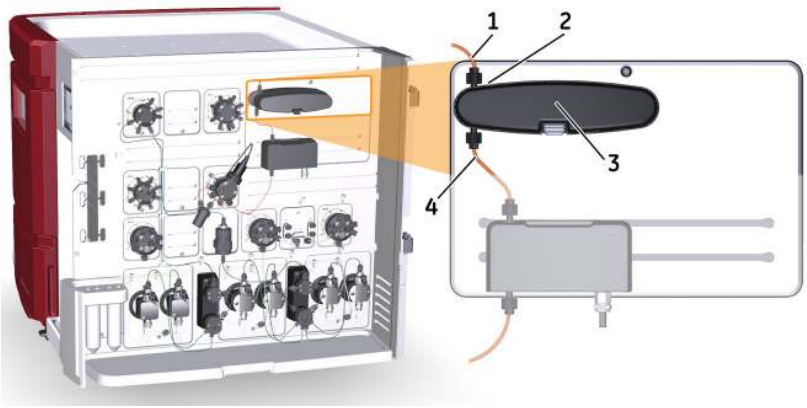

Part	Description	Part	Description
1	Inlet	3	UV detector
2	UV flow cell	4	Outlet

UV flow cells

NOTICE

UV and conductivity flow cells on the high pressure side. When placing UV and/or conductivity flow cells on the high pressure side of the column, the UV flow cell has a maximum pressure limit of 2 MPa (20 bar) and the conductivity flow cell has a maximum pressure limit of 5 MPa (50 bar).

UV flow cells are available with three different path lengths; 0.5 mm, 2 mm (default) and 10 mm.

Flow cells with shorter path lengths are suitable to use for high protein concentrations. Flow cells with longer path lengths are suitable to use for low protein concentrations.

Note: *If the UV flow cell with 10 mm path length is used, do not run at flow rates higher than 50 ml/min as this flow cell increases the back pressure and may result in a pressure higher than 2 MPa (20 bar).*

The real cell path length of the UV cell is automatically recognized by the monitor when a cell is fitted. The UV data is normalized to the nominal path length. This allows UV data from runs made with different UV flow cells (but with the same nominal path length) to be directly compared.

The UV monitor U9-M is automatically calibrated every time the instrument is switched on. The path lengths of the flow cells are factory calibrated and no further calibration is needed.

3.12 Conductivity monitor

Function of the Conductivity monitor

The Conductivity monitor continuously measures the conductivity of buffers and eluted proteins.

The Conductivity flow cell has two electrodes positioned in the flow path of the cell. An alternating voltage is applied between the electrodes and the resulting current is measured and used to calculate the conductivity of the eluent.

The conductivity is automatically calculated by multiplying the measured conductance by the cell constant of the flow cell. The cell constant is factory-calibrated on delivery but can be re-calibrated if needed, see *Section 7.7.3 Calibrate the Conductivity Monitor, on page 324*.

As variation in temperature influences conductivity readings, the conductivity flow cell is fitted with a temperature sensor that measures the temperature of the eluent. A temperature compensation factor can be set in ***System settings*** and is used to report the conductivity in relation to a set reference temperature.

Location and illustration of Conductivity monitor

The following illustration shows the location of the Conductivity monitor and also an enlargement of the monitor. In both ÄKTA avant 25 and ÄKTA avant 150 the monitor is labelled **C9**.

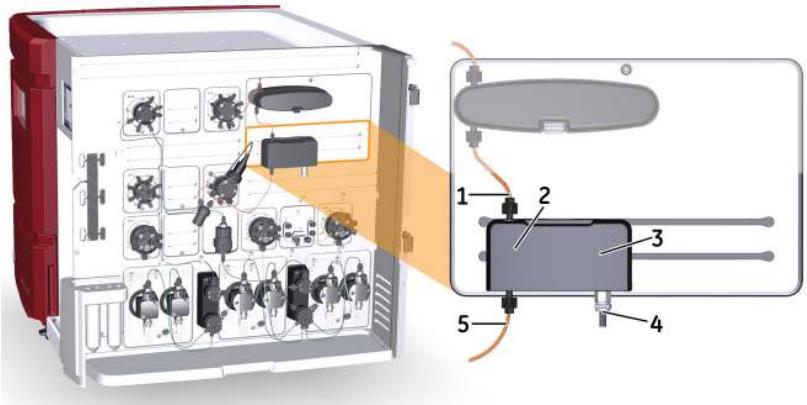

Part	Description	Part	Description
1	Inlet	2	Conductivity flow cell
3	Conductivity monitor	4	Conductivity monitor cable
5	Outlet		

4 Optional instrument modules

About this chapter

This chapter contains detailed instructions on the optional instrument modules that can be connected to the ÄKTA avant instrument. A brief description of how to install the modules is also provided.

In this chapter

This chapter contains the following sections

Section	See page
4.1 System extension overview	99
4.2 Installation of optional modules	100
4.3 Extra inlet valves	108
4.4 Second Column valve	112
4.5 Extra Outlet valves	115
4.6 External air sensors	118
4.7 Loop valve	122
4.8 Versatile valve	126
4.9 Fraction collector F9-R	128
4.10 Second Conductivity monitor	135
4.11 Second UV monitor	137
4.12 I/O-box	141
4.13 General system settings	151

4.1 System extension overview

Introduction

The ÄKTA avant instrument can easily be extended with additional valves, detectors and a second fraction collector. There are a large number of different hardware modules to choose from in order to customize the number of columns, inlets, outlets, detectors and ways to apply and collect samples. For a list of optional modules see *Description of optional modules, on page 24*.

System extension stages

Extension of the system consists of four main stages:

Stage	Description
1	Select modules and positions
2	Install the module(s)
3	Edit system properties
4	Edit system settings

4.2 Installation of optional modules

Introduction

Up to six extra modules can be installed in the system: three modules can be installed on the system wet side using the free module positions (module panels are installed in these positions at delivery), and three modules can be connected to the back of the instrument.

Note: *Do not remove any module panels and then leave the position empty. It will affect instrument function.*

To obtain an optional flow path, it is also possible to move the standard valves to other positions. The illustration below shows the free module positions, marked in orange.

The Extension box can be used to hold modules connected to the back of the instrument. See *Section 2.6.3 Extension box, on page 51* for more information.

Node ID

Most of the available optional modules are preconfigured to give the desired function. However, the function of a module or valve can be changed by changing its Node ID. Node ID is also used by the instrument to distinguish between several units of the same type.

Refer to *Section 9.15 Check and change the Node ID of a module, on page 510* for instructions on how to check and change the Node ID of a module.

Install a module in the instrument

The instruction below describes how to install the module hardware in the instrument.

Note: *The illustrations show the principle how to install an optional module. The position of the module on the instrument and the used type of module will depend on the module being installed.*

CAUTION

Disconnect power. Always switch off power to the ÄKTA avant instrument before replacing any of its components, unless stated otherwise in the user documentation.

Step	Action
1	Disconnect power from the instrument by switching off the instrument power switch.
2	Loosen the connectors and remove the tubing from the existing module. ***Note:*** *This step does not apply for a Module Panel.*
3	Loosen the module with a Torx T20 screwdriver.

Step	Action
4	Remove the module.
5	Disconnect the cable and secure it in the slit.
6	Connect the cable to the module to be installed.

Step	Action
7	Insert the module.
8	Fasten it with a Torx T20 screwdriver. 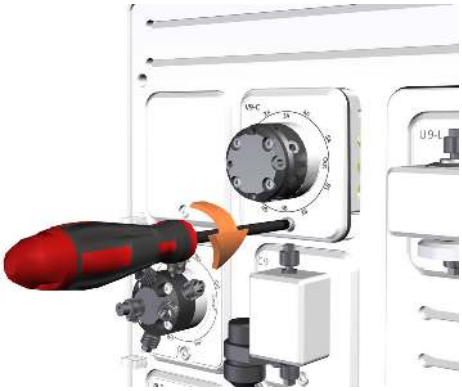

Note: *A warning message is displayed at start up if a module has been installed in the instrument but not added to the* ***System Properties*** *dialog box in UNICORN.*

ÄKTA avant connector plate

Modules not installed in the instrument cabinet are connected via a UniNet-9 cable at the back of the system. It is possible to connect up to three external modules.

The following illustration shows the connector plate with the UniNet-9 connectors located on the back of the ÄKTA avant instrument.

Part	Function
1	UniNet-9 connectors (one connector is occupied by the Conductivity monitor)
2	Network connector (Ethernet)
3	**Test** point for service.
4	Power input connector

NOTICE

Do not connect any module to the connector **Test** on the ÄKTA avant instrument.

Note: *Plug all unused UniNet-9 ports on the ÄKTA avant instrument with jumpers.*

Note: *The connector **Test** should be protected by a plastic lid. Do not plug the connector with a jumper.*

Constraints on optional modules

The table below indicates usage constraints for the different external modules.

External module	Constraints
I/O-box E9	I/O-box E9 has no constraints.
I/O-box E9, 2nd	I/O-box E9, 2nd requires I/O-box E9.
Fraction collector 2	Fraction collector 2 requires Fraction collector and can not be installed at the same time as Outlet valve 2nd or 3rd.
External air sensor	External air sensor has no constraints
Optional module mounted in Extension box	See respective section for each module.

Note: *To optimize signal quality, the total cable length connecting all external modules to the ÄKTA avant instrument should not exceed 10 m.*

Edit System Properties

When a new module has been installed, the system properties have to be updated in UNICORN. The system will restart automatically when the configuration has been changed in the ***System Properties*** dialog box and then the system can be reconnected.

There are four main types of modules (named components in UNICORN) to select from:

- Valves and pumps
- Monitors and sensors
- Fraction collectors
- Other (e.g., I/O-box)

More than one component of the same type is only available if the first has been selected. The selection made is reflected in which instructions and phase properties that are available.

The following instruction gives a general description of how to update the system properties in UNICORN.

Step	Action
1	• In the ***Administration*** module. On the ***Tools*** menu, click ***System Properties*** or click the ***System Properties*** button to open the dialog box. *Result*: The ***System Properties*** dialog box is displayed. • Select the system of interest in the ***System Properties*** dialog box. • Click ***Edit***. ***Note:*** *Only active systems can be edited.* *Result*: The ***Edit*** dialog box is displayed. 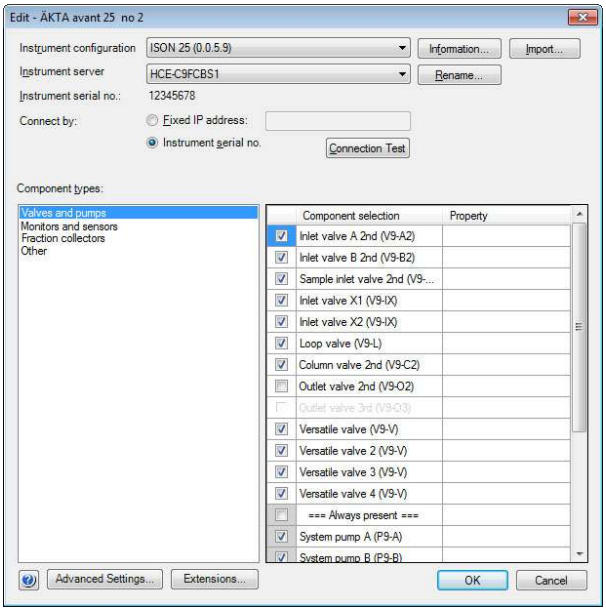
2	Select the component type of interest from the ***Component types*** list. *Result:* All available components are shown in the ***Component selection*** list. • Select the checkbox to select the added component. • When applicable, choose the appropriate ***Property***. ***Note:*** *Instrument modules are referred to as* ***Components*** *in UNICORN.*
3	Click the ***OK*** button to apply the changes.

Edit system settings

It may be necessary to edit the ***System Settings*** when the configuration of the system is changed. For example, if the change in configuration affects the delay volume following the UV monitor (or other monitor connected via the I/O-box) the appropriate system settings for ***Delay volumes*** have to be updated. This is to ensure that the fractions marked in the chromatogram corresponds to the actual collected fractions.

Other system settings might also need to be edited for some optional modules.

All system settings available for ÄKTA avant are found in *Section 9.7 System settings, on page 454*.

4.3 Extra inlet valves

Introduction

In the ÄKTA avant standard configuration, 7 inlets are available for each inlet valve. To increase the number of inlets, a second inlet valve can be installed that increases the number of inlets to 14 for one of the valves. This optional configuration can be convenient for example when a larger number of samples will be used.

There are also general inlet valves which can be used to increase the number of inlets to for example the Quaternary valve.

Note: *The general inlet valves are delivered without built-in air sensors.*

Location of ÄKTA avant inlet valves

Second Inlet valves (**V9-A2**, **V9-B2** or **V9H-A2**, **V9H-B2**) or second Sample inlet valve (**V9-S2** or **V9H-S2**) can be installed in the lower free position as illustrated below. To obtain an optional flow path, it is also possible to move the standard valves to other positions.

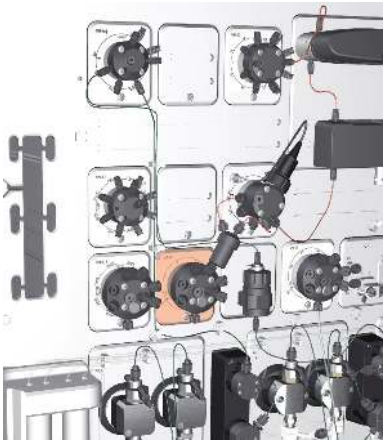

Flow paths in ÄKTA avant

Second Sample inlet valve

The illustration below shows an optional flow path when a second Sample inlet valve is installed. The flow is directed from the **Out** port of the second Sample inlet valve (**V9-S2** or **V9H-S2**) to the buffer port **BUFF** of the Sample inlet valve (**V9-IS** or **V9H-IS**) and leaves the valve through the **Out** port to the Sample pump. In the software, 14 sample inlets can now be selected.

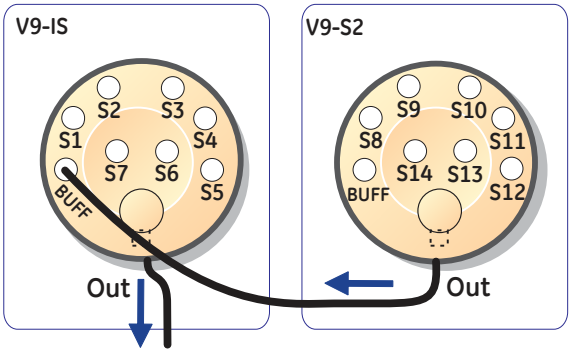

Second Inlet valve

The illustration below shows an optional flow path when a second Inlet valve is installed, connected to Inlet valve A. The flow is directed from the **Out** port of the Second Inlet valve (**V9-A2** or **V9H-A2**) to port **A7** of the Inlet valve (**V9-IA** or **V9H-IA**) and leaves the valve through the **Out** port to the System pump A. In the software, 14 A inlets can now be selected.

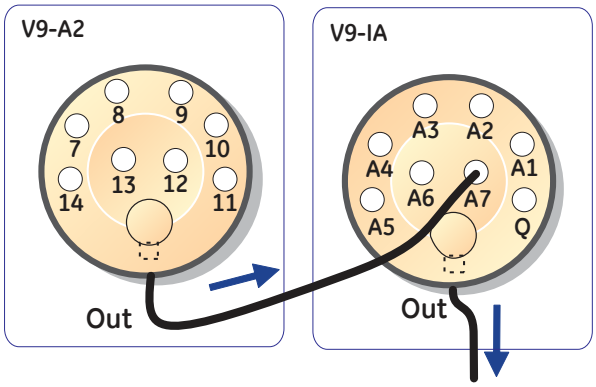

Connect tubing

- Connect tubing from port **7** of one of the standard inlet valves (Inlet valve A or Inlet valve B) to port **Out** of the second Inlet valve..

  and/or

- Connect tubing from port **BUFF** of the standard Sample inlet valve to port **Out** of the second Sample inlet valve.

The table below shows recommended tubing and connectors. For an illustration of tubing labels see *Tubing labels, on page 429*.

Connection between the extra Inlet valve and...	Tubing label	Tubing	Connector	Tubing length (mm)
Inlet valve A	**InA2**	For ÄKTA avant 25: FEP, o.d. 1/8", inner diameter (i.d.) 1.6 mm For ÄKTA avant 150: FEP, o.d. 3/16", i.d. 2.9 mm	For ÄKTA avant 25: Tubing connector, 5/16" with Ferrule (yellow), 1/8" For ÄKTA avant 150: Tubing connector, 5/16" + Ferrule (blue), 3/16"	250
Inlet valve B	**InB2**			350
Sample inlet valve	**InS2**			200

Note: *For runs with small volumes of sample, the sample inlet tubing can be changed to narrow inlet tubing, ETFE, o.d. 1/16", i.d. 0.75 mm (28-9572-17).*

Inlet valves X1 and X2

Inlet valve X1 and Inlet valve X2 are inlet valves that can be used to create different flow paths. They can be combined with any of the other inlet valves or be used on their own. The valves can be placed anywhere, depending on the desired purpose.

Note: *To create methods with the use of the valves, **Text Instruction** mode has to be selected in the **Method Editor**. The valves will be visible in the **Instruction Box** for **Flow path**.*

ÄKTA avant 25 product name	ÄKTA avant 25 instrument label	ÄKTA avant 150 product name	ÄKTA avant 150 instrument label
Inlet valve V9-X1	**V9-IX**	Inlet valve V9H-X1	**V9H-IX**
Inlet valve V9-X2	**V9-IX**	Inlet valve V9H-X2	**V9H-IX**

The Inlet valves X1 and X2 can for example be used to increase the number of inlets to the Quaternary valve.

For ÄKTA avant 25, the recommended tubing is FEP, o.d. 1/8", i.d. 1.6 mm with Tubing connector, 5/16" with Ferrule (yellow), 1/8".

For ÄKTA avant 150: the recommended tubing is FEP, o.d. 3/16", i.d. 2.9 mm with Tubing connector, 5/16" + Ferrule (blue), 3/16".

Tubing length depends on location.

System properties

Follow the instruction to update the system properties.

Step	Action
1	Open the system properties ***Edit*** dialog box.
2	In the ***Component types*** list, click ***Valves and pumps***
3	In the ***Component selection*** list, select the check boxes corresponding to the installed modules. Then click ***OK***.

System settings

There are no system settings available for the inlet valves.

4.4 Second Column valve

Introduction

When using the ÄKTA avant standard configuration with one column valve, 5 column positions are available. To increase the number of column positions to 10, an additional column valve can be installed in the instrument. One application is for evaluation of a number of different columns during method optimization.

Location and illustration

A recommended flow path is to move the Column valve (**V9-C** or **V9H-C**) to the free upper position (Fig A) and to install the second Column valve (**V9-C2** or **V9H-C2**) in the previous position of Column valve **V9-C** or **V9H-C** (Fig B).

A

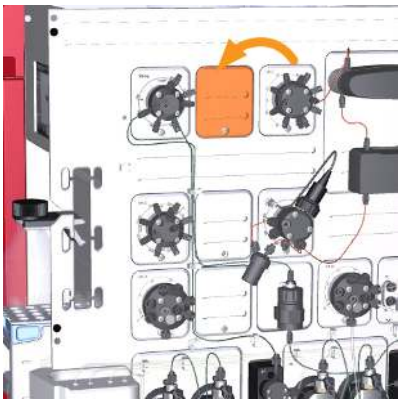

B

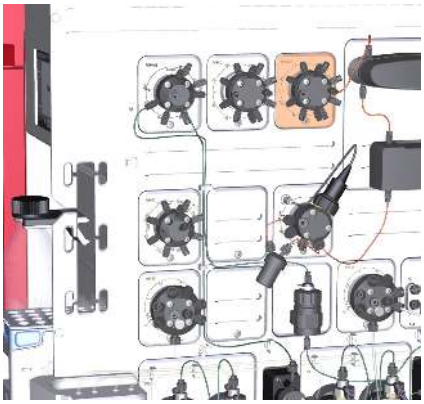

Flow path

The second Column valve (**V9-C2** or **V9H-C2**) is connected after the standard Column valve (**V9-C** or **V9H-C**). Port **Out** of the standard Column valve is connected with port **In** of the second Column valve. Ten columns can now be selected in UNICORN.

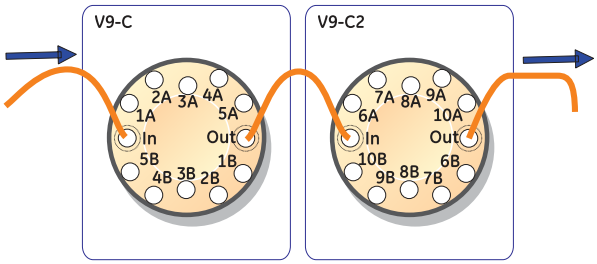

Note: *The standard Column valve (**V9-C** or **V9H-C**) must be connected before the second Column valve (**V9-C2** or **V9H-C2**). Otherwise, the pressure monitors will not function correctly.*

Connect tubing

For an illustration of standard tubing labels see *Tubing labels, on page 429*.

Step	Action
1	Remove the piece of standard tubing between the Injection valve (**V9-Inj** or **V9H-Inj**) and the standard Column valve (**V9-C** or **V9H-C**).
2	Connect tubing between the Injection valve, column valves and the UV monitor according to the following table.

Connection between...	Tubing label	Tubing	Connector	Tubing length (mm)
Injection valve and Column valve	**5C1** [1]	For ÄKTA avant 25: PEEK, o.d. 1/16", i.d. 0.50 mm For ÄKTA avant 150: PEEK, o.d. 1/16", i.d. 1.0 mm	For ÄKTA avant 25: Fingertight connector, 1/16" For ÄKTA avant 150: Fingertight connector, 1/16"	100
standard Column valve and second Column valve	**5C2** [1]			100
second Column valve and UV monitor	**6** [2]			160

1 Cut the spare piece of tubing delivered with the system to correct length.

2 The original connection between the standard Column valve and the UV monitor can be used.

System properties

Follow the instruction to update the system properties.

Step	Action
1	Open the system properties ***Edit*** dialog box.
2	In the ***Component types*** list, click ***Valves and pumps***.
3	Select the ***Column valve 2nd (V9-C2)*** or ***Column valve 2nd (V9H-C2)*** check box in the ***Component selection*** list. Then click ***OK***.

System settings

The built-in pressure sensors for Column valves **V9-C** and **V9H-C** have to be re-calibrated after installation. See *Section 7.7.2 Calibrate the pressure monitors, on page 320*.

A pre-column pressure alarm shall always be set to protect the column. See *Section 5.6 Set pressure alarms, on page 185* for how to protect columns.

4.5 Extra Outlet valves

Introduction

When using the standard configuration with one Outlet valve, 10 outlet positions are available. To increase the number of outlets, one or two extra Outlet valves can be connected, adding up to a total of 21 or 32 outlet positions. This optional configuration is convenient when collecting a number of large fractions outside the fraction collector.

Locations and illustrations

It is recommended to install the extra outlet valves in the middle and in the lower position. The illustration below shows the recommended positions.

Flow path

The tubing from the pH monitor is connected to the **In** port of the Outlet valve (**V9-O** or **V9H-O**). The **Out 10** port of the Outlet valve (**V9-O** or **V9H-O**) is connected to the **In** port of the second Outlet valve (**V9-O2** or **V9H-O2**). The **Out 21** port of the second Outlet valve is connected to the **In** port of the third Outlet valve.

The following illustration shows the flow path with two extra Outlet valves installed on ÄKTA avant 25.

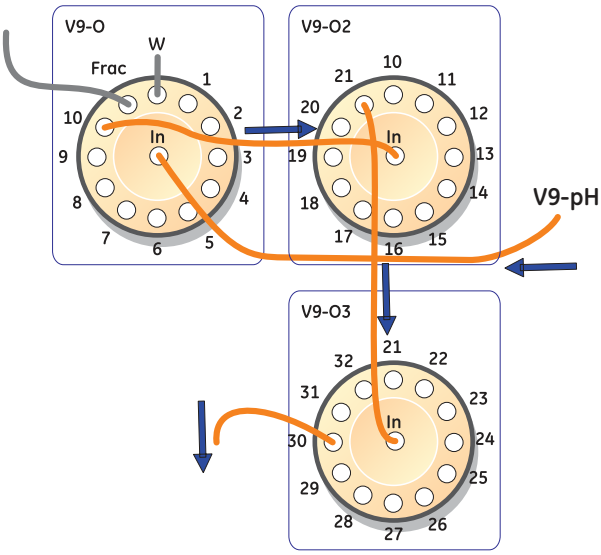

Note: *The second or third Outlet valve can not be installed together with the second Fraction collector **F9-R**.*

Connect tubing

The table below shows recommended connectors and tubing. For an illustration of standard tubing labels see *Tubing labels, on page 429*.

Connection between...	Tubing label	Tubing	Connector	Tubing length (mm)
standard Outlet valve and second Outlet valve	**10**[1]	For ÄKTA avant 25: PEEK, o.d. 1/16", i.d. 0.50 mm	For ÄKTA avant 25: Fingertight connector, 1/16"	220
second Outlet valve and third Outlet valve	**11**[1]	For ÄKTA avant 150: PEEK, o.d. 1/16", i.d. 1 mm	For ÄKTA avant 150: Fingertight connector, 1/16"	220

1 Cut the spare piece of tubing delivered with the system to correct length.

System properties

Follow the instruction to update the system properties.

Step	Action
1	Open the system properties ***Edit*** dialog box.
2	In the ***Component types*** list, click ***Valves and pumps***.
3	In the ***Component selection*** list, select the check boxes corresponding to the installed modules. Then click ***OK***.

System settings

If the valve is placed in the flow path between the UV monitor and the outlet valve, the delay volume must be set. See *Check or set delay volumes, on page 151*.

Note: *It is recommended not to alter the default values for restrictor and pH cell delay volumes when standard modules and standard tubing for flow restrictor are used.*

4.6 External air sensors

Introduction

Two external air sensors are available as options. The difference is their size and where they can be installed. ÄKTA avant supports installation of one external air sensor at a time.

L9-1.5 external air sensor

L9-1.5 has a inner diameter (i.d.) of 1.5 mm and is designed for 1.6 mm i.d. tubing at the low pressure side before the pumps. It is installed before the Sample inlet valve and is used to prevent air from entering the Sample inlet valve.

L9-1.2 external air sensor

L9-1.2 has a 1.2 mm i.d. and is designed for 1/16" tubing outer diameter at the high pressure side before the column. It is installed after the Injection valve and is used to prevent air from entering the Column valve.

The air sensors can be attached to the instrument using the rails. No module panels need to be removed.

The ***Run Data*** for air sensors shows the status of the air sensor. If an alarm is triggered and then acknowledged, the ***Run Data*** will be reset to ***No Air*** even if there still is air in the sensor. When the flow starts another alarm will go off if air is still present.

Location and illustration

The following illustration shows the recommended positions for the external air sensors.

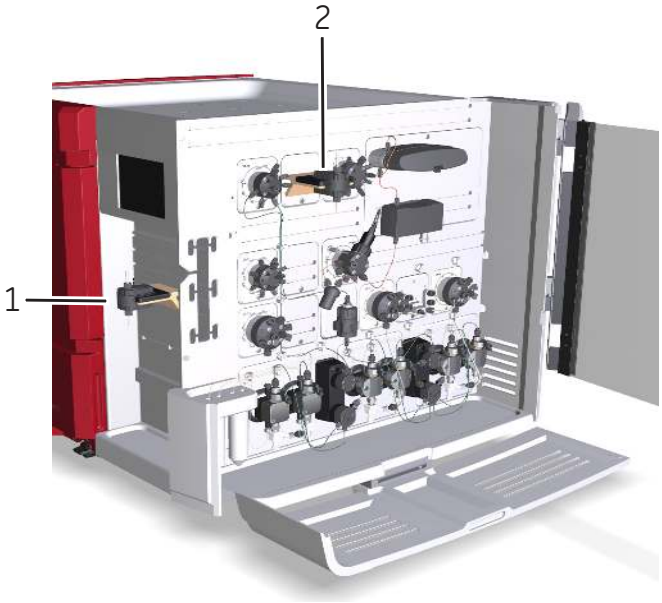

Part	Function
1	**L9-1.5** external air sensor before Sample inlet valve
2	**L9-1.2** external air sensor after Injection valve

Note: *Only one external air sensor can be installed at a time.*

Connect tubing

L9-1.5

Connection between...	Tubing label	Tubing	Connector	Tubing length (mm)
L9-1.5 and **V9-IS** or **V9H-IS**	**L**	FEP, o.d. 1/8", i.d. 1.6 mm	Tubing connector, 5/16" + Ferrule (yellow), 1/8"	200

L9-1.2

Connection between...	Tubing label	Tubing	Connector	Tubing length (mm)
V9-Inj or **V9H-Inj** and **L9-1.2**	**5L1** [1]	For ÄKTA avant 25: PEEK, o.d. 1/16", i.d. 0.50 mm For ÄKTA avant 150 : PEEK, o.d. 1/16", i.d. 1 mm	For ÄKTA avant 25: Fingertight connector, 1/16" For ÄKTA avant 150: Fingertight connector, 1/16"	100
L9-1.2 and **V9-C** or **V9H-C**	**5L2** [1]	For ÄKTA avant 25: PEEK, o.d. 1/16", i.d. 0.50 mm For ÄKTA avant 150: PEEK, o.d. 1/16", i.d. 1 mm	For ÄKTA avant 25: Fingertight connector, 1/16" For ÄKTA avant 150: Fingertight connector, 1/16"	100

1 Cut the spare piece of tubing delivered with the system to correct length.

System properties

Follow the instruction to update the system properties.

Step	Action
1	Open the system properties ***Edit*** dialog box.
2	In the ***Component types*** list, click ***Monitors and sensors***.
3	Select the ***External air sensor (L9)*** check box in the ***Component selection*** list.
4	In the ***Property*** list, click ***Before sample inlet*** or ***After injection valve*** depending on where the air sensor is placed. ***Note:*** *The available properties are the same, regardless of which type of air sensor that is used, L9-1.2 or L9-1.5.*
5	Click ***OK***.

System settings

The sensitivity of the external air sensor can be set.

Parameter	Air volume detected		Usage
	ÄKTA avant 25	ÄKTA avant 150	
Normal (default)	30 µl	100 µl	Detect empty buffer/sample vessels
High	10 µl	30 µl	Detect even small air bubbles

Note: *The sensitivity should be set to **Normal** when the air sensor is located before the Sample pump (**Before sample pump**). Due to higher pressure and risk of small air bubbles, the sensitivity should be set to **High** when the air sensor is located after the Injection valve (**After injection valve**).*

4.7 Loop valve

Function of the Loop valve

The Loop valve allows the user to connect several loops simultaneously to the instrument. It can for example be used for storing intermediate fractions in multi-step purifications, for storing samples to be used in scouting runs, or for storing eluents needed in low volumes. The valve also has a built-in by-pass function that enables by-passing all loops. The Loop valve is labeled **V9-L** or **V9H-L**.

Location and illustration of Loop valve

The illustration below shows the recommended location, together with a detailed view of Loop valve **V9-L**.

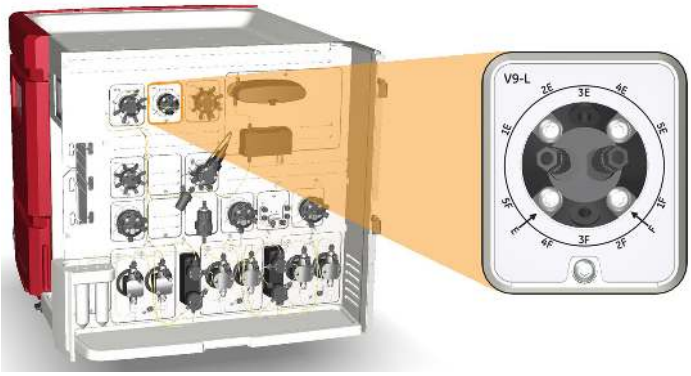

Ports and flow paths of the Loop valve

The illustration and tables below describe the ports and different flow paths through the Loop valve. In the **Position 4** example, the loop is connected to loop position 4 and the loop is being emptied.

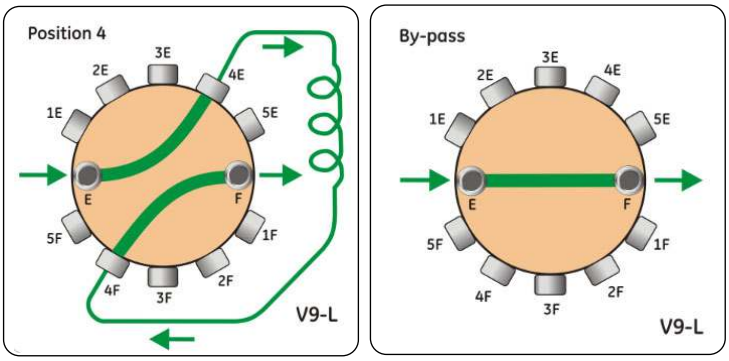

Port	Description
F	Port connected to the **LoopF** port of the Injection valve.
1F and **1E** to **5F** and **5E**	Ports for connection of loop 1 to loop 5.
E	Port connected to the **LoopE** port of the Injection valve.

Note: *Ports denoted by the letter F are used for filling the loop and ports denoted by the letter E are used for emptying the loop.*

Flow path	Description
Position ***1-5***	The flow direction depends on the Injection valve position.
By-pass	The flow by-passes the loop(s). ***By-pass*** is the default flow path.

Connect tubing

The table below shows recommended tubing and connectors. For an illustration of tubing labels see *Tubing labels, on page 429*.

Tubing label	Connection	Tubing		Connector	Tubing length (mm)
		ÄKTA avant 25	ÄKTA avant 150		
L1	Injection valve position **LoopF** to Loop valve position **F**	PEEK, o.d. 1/16", i.d. 0.50 mm	PEEK, o.d. 1/16", i.d. 1.0 mm	Fingertight connector, 1/16"	160
L2	Injection valve position **LoopE** to Loop valve position **E**	PEEK, o.d. 1/16", i.d. 0.50 mm	PEEK, o.d. 1/16", i.d. 1.0 mm	Fingertight connector, 1/16"	160

Connect a Loop valve

The Loop valve is connected to the Injection valve instead of a loop, as described below.

Step	Action
1	Connect port **E** on the Loop valve to port **LoopE** on the Injection valve.
2	Connect port **F** on the Loop valve to port **LoopF** on the Injection valve.
3	Connect one or many loops to the Loop valve. See *Section 5.7 Sample application, on page 187*. ***Note:*** *Always use the the first positions of the valve for the connected loops (e.g., if three loops will be used, use port **1F**-**3F** and the corresponding ports **1E**-**3E**) to avoid cross-contamination.*

Note: *It is possible to place the Loop valve in other positions in the flow path than the one described above. However, the volume used for washes will then be incorrect, just as the system configuration shown in the process picture.*

System properties

Follow the instruction to update the system properties.

Step	Action
1	Open the system properties ***Edit*** dialog box.
2	In the ***Component types*** list, click ***Valves and pumps***
3	Select the ***Loop valve (V9-L)*** or ***Loop valve (V9H-L)*** check box in the ***Component selection*** list. Then click ***OK***.

System settings

The flow rate for Loop wash can be set.

Instruction name	Description
Loop wash settings	Sets the flow rate used during ***Loop wash***. ***Note:*** *The flow rate should not exceed 10 ml/min if narrow inlet tubing (i.d. 0.75 mm) is used.*

4.8 Versatile valve

Function of the Versatile valve

The Versatile valve is a 4-port, 4-position valve, which can be used to add extra features to the flow path. For example, the valve can be used to connect external equipment to the flow path during parts of a run. The versatile valve is labeled **V9-V** or **V9H-V**.

It is possible to install up to four versatile valves simultaneously in ÄKTA avant. The configuration is defined by the module's Node ID. The Node ID is set by positioning the arrows of the two rotating switches at the back of the valve, see *Section 9.15 Check and change the Node ID of a module, on page 510*.

The valve can be installed in any free module position. It is also possible to install the valve in an Extension box. See *Section 2.6.3 Extension box, on page 51*.

Ports and flow paths of the Versatile valve

The following illustration and table describe the different ports of and flow paths through the Versatile valve. The valve has four ports (**1**-**4**).

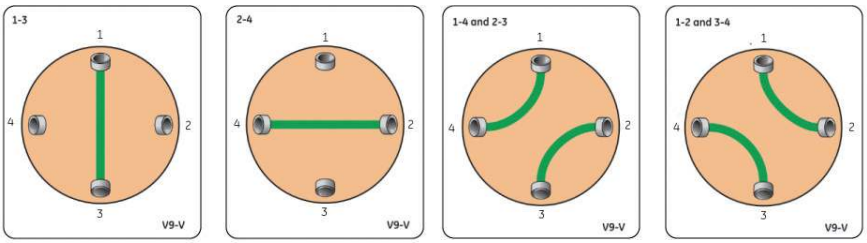

The Versatile valve has four available sets of flow paths; two where a single flow channel is used and two where the flow can be directed through two different channels simultaneously.

Flow path	Description
1-3	A single flow channel where the flow is directed between port **1** and port **3**.
2-4	A single flow channel where the flow is directed between port **2** and port **4**.

Flow path	Description
1-4 and 2-3	Two simultaneously used flow channels where the flow is directed between port **1** and port **4** and between port **2** and port **3**.
1-2 and 3-4	Two simultaneously used flow channels where the flow is directed between port **1** and port **2** and between port **3** and port **4**.

System properties

Follow the instruction to update the system properties.

Step	Action
1	Open the system properties ***Edit*** dialog box.
2	In the ***Component types*** list, click ***Valves and pumps***.
3	In the ***Component selection*** list, select the check boxes corresponding to the installed modules. Then click ***OK***.

System settings

If the valve is placed in the flow path between the UV monitor and the outlet valve, the delay volume must be set. See *Check or set delay volumes, on page 151*.

4.9 Fraction collector F9-R

Introduction

The external Fraction collector **F9-R** is installed as the second fraction collector in the ÄKTA avant system. It is used to expand the fractionation capabilities of the ÄKTA avant or used to fractionate volatile solutions for example in reversed phase separations.

Set Node ID

The Node ID of the external Fraction collector **F9-R** must be set to **1** in order to be used in the in the ÄKTA avant system. The Node ID is set by positioning the arrow of the rotating switch at the back of the fraction collector. See *Connector panel illustration, on page 130* and *Section 9.15 Check and change the Node ID of a module, on page 510*.

Function

The external fraction collector can be used for:

- Fixed volume fractionation
- Peak fractionation
- Combined fixed volume fractionation and peak fractionation
- Collecting fractions in reversed phase separations using organic solvents

Fraction collector **F9-R** has the following function for reducing sample spill during fractionation:

- DropSync

Front view illustration

The illustration below shows the main parts of the Fraction collector.

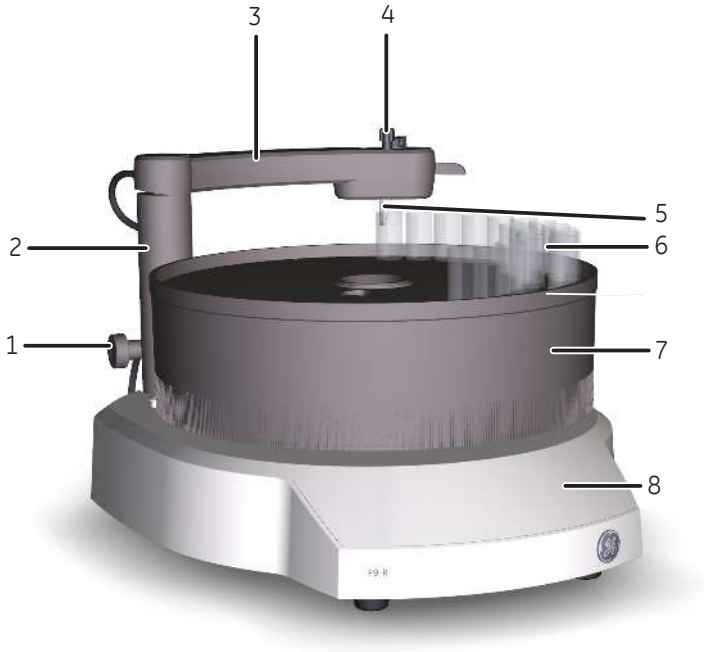

Part	Function
1	Lock knob
2	Stationary part of delivery arm
3	Delivery arm
4	Tubing connector
5	Tube sensor
6	Collection tubes
7	Tube rack
8	Base unit

Connector panel illustration

The illustration below shows the main parts of the connector panel on the fraction collector.

Part	Function
1	Node ID switch
2	UniNet-9 F-type connector (for communication and power supply)

Available tubes

For Fraction collector F9-R the fractions are collected in tubes of different sizes.

Tubes with the following diameter can be used with Fraction collector F9-R:

- 12 mm
- 18 mm
- 30 mm

The tubes can have a tube length between 50 to 180 mm.

Illustration of the Fraction collector F9-R tube rack

Each tube rack is made up of a combination of a Bowl, Tube support, Tube guide and Tube holder. For more information on the assembly of the tube rack, see *Assembly instructions, on page 209*. For information on which Tube rack to use, see *Tube rack inserts, on page 208*.

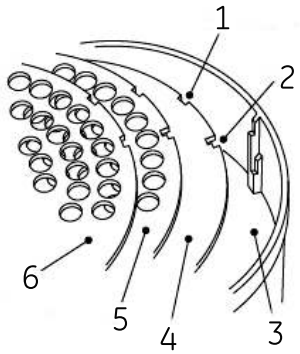

Part	Function
1	Single cutout
2	L-shaped cutout
3	Bowl
4	Tube support
5	Tube guide
6	Tube holder

Note: *Note that the tube guide has both single and L-shaped cutouts, while the tube holder only has single cutouts. See Single and L-shaped cutouts, on page 208 for more information.*

Standard tubing dimensions

The table below shows recommended standard tubing dimensions to connect Fraction collector F9-R.

System	Tubing length (mm)	Tubing diameter (mm)
ÄKTA avant 25	500	0.50
ÄKTA avant 150	500	1.00

Note: *Cut the tubing according to the table above from the spare tubing delivered with the ÄKTA avant instrument.*

Connect tubing to the ÄKTA avant instrument

Follow the instructions in the table to connect the tubing from the fraction collector to the ÄKTA avant instrument.

Step	Action
1	Lift out the tubing holder (4) from the delivery arm (1).

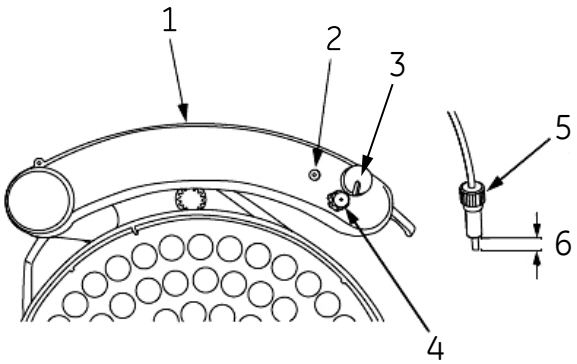

2	Loosen the nut of the tubing holder. Do not remove the tubing holder nut (5) from the tubing holder.
3	Insert the tubing through the tubing holder.
4	Place the tubing holder with the tubing over the tube adjustment cavity (2) of the delivery arm. Push the tubing down against the bottom of the tube adjustment cavity, and then fingertighten the tubing holder nut. This ensures the correct length of the exposed tubing end (6).

Step	Action
5	Re-install the tubing holder in the delivery arm.
6	Connect the tubing from the fraction collector to port **Out 10** on the Outlet valve.
7	Adjust the delay volume setting in UNICORN to the volume of the tubing, see *Set the delay volume in UNICORN, on page 501* for more details.

System properties

Follow the instruction to update the system properties.

Step	Action
1	Open the system properties ***Edit*** dialog box.
2	In the ***Component types*** list, click ***Fraction collectors***.
3	Select the ***Fraction collector 2 (F9-R)*** check box in the ***Component selection*** list. Then click ***OK***.

Note: *The **Fraction collector** check box must be selected for the **Fraction collector 2 (F9-R)** check box to be available.*

Note: *the **Fraction collector 2 (F9-R)** check box is not available if the second or third Outlet valve is installed.*

System settings

If non-standard tubing is used between the outlet valve and the fraction collector, the delay volume must be set. See *Check or set delay volumes, on page 151*. Fraction settings and numbering mode can also be set.

Instruction name	Description
Fractionation settings frac 2	***DropSync*** on or off. It is recommended to use this setting for flow rates below 2 ml/min. Higher flow rates can however be used, depending on the properties (e.g. surface tension) of the liquid.
Fractionation numbering mode frac 2	Determines whether fraction number for the fraction collector 2 is reset at the end of a method or not. ***Note:*** *The default setting is* ***Reset****.*
Peak fractionation parameters	***Peak fractionation parameters*** sets the detection parameters for peak collection, i.e. it determines when a peak starts and ends. This information is used by the instructions ***Peak fractionation***, ***Peak fractionation frac 2*** and ***Peak frac in outlet valve*** in order to start/end the peak collection.

4.10 Second Conductivity monitor

Introduction

It is possible to use two conductivity monitors. The second Conductivity monitor could for example be placed before the column for extended gradient control or on a sample inlet line for control of ionic strength in the sample.

Location

The recommended position of the second Conductivity monitor is dependent on column size or where the Sample inlet valve is placed. The nearest empty module position should be used. It is possible to install the module in an Extension box. See *Section 2.6.3 Extension box, on page 51*.

NOTICE

UV and conductivity flow cells on the high pressure side. When placing UV and/or conductivity flow cells on the high pressure side of the column, the UV flow cell has a maximum pressure limit of 2 MPa (20 bar) and the conductivity flow cell has a maximum pressure limit of 5 MPa (50 bar).

Connect tubing

When connecting a second Conductivity monitor to ÄKTA avant use the tubing dimensions that are most suitable for the chosen location and application.

System properties

Follow the instruction to update the system properties.

Step	Action
1	Open the system properties ***Edit*** dialog.
2	In the ***Component types*** list, click ***Monitors and sensors***.
3	Select the ***Conductivity monitor 2nd (C9)*** check box in the ***Component selection*** list. Then click ***OK***.

System settings

If the monitor is placed in the flow path between the UV monitor and the outlet valve, the delay volume must be set. See *Check or set delay volumes, on page 151*.

4.11 Second UV monitor

Introduction

It is possible to use up to two UV monitors simultaneously, a UV monitor **U9-L** can be installed alongside the standard UV monitor **U9-M**. The second UV monitor could for example be used to enable the user to cover a larger dynamic range in UV absorbance measurements by using different cell lengths. The two monitors should then be placed as close as possible to each other. The second monitor could also be used to monitor the absorbance of incoming feed and is then placed in the flow path just before the column valve.

Function of UV monitor U9-L

The UV monitor **U9-L** continuously measures the UV absorbance at the fixed wavelength of 280 nm.

It is not possible to vary the wavelength, or turn on or off the **U9-L** monitor. This is therefore not shown in the ***Phase Properties*** pane in ***Method Editor***. However, in a pre-defined method the second UV monitor will be auto zeroed at the same time as the **U9-M** monitor.

Illustration of UV monitor U9-L

The following illustration show a detailed view of the monitor and detector.

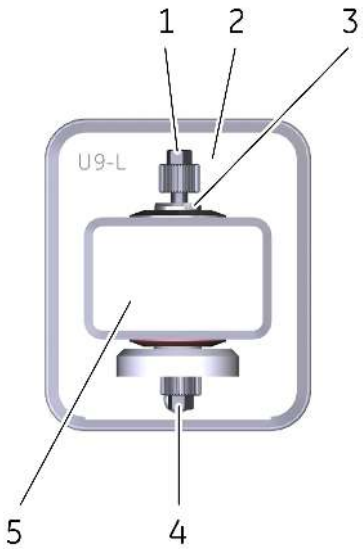

Part	Description
1	Inlet
2	UV monitor **U9-L**
3	UV flow cell. Two different path lengths are available: 2 mm (default) and 5 mm
4	Outlet
5	UV detector

Location of UV monitor U9-L

Depending on the application, the second UV monitor can be placed at different positions in the flow path, for example close to the first UV monitor or before the Column valve. Use the nearest empty module position or an Extension box to hold the second UV monitor **U9-L**. See *Section 2.6.3 Extension box, on page 51*.

The second UV monitor can be located anywhere in the flow path and is therefore shown in the ***Process Picture*** in UNICORN as a component without a fixed place. This means that it is possible to place the second UV monitor **U9-L** before the first UV monitor in the flow path.

NOTICE

UV and conductivity flow cells on the high pressure side. When placing UV and/or conductivity flow cells on the high pressure side of the column, the UV flow cell has a maximum pressure limit of 2 MPa (20 bar) and the conductivity flow cell has a maximum pressure limit of 5 MPa (50 bar).

Using two UV monitors

It is possible to use two UV monitors in ÄKTA avant. UV monitor **U9-M** will be the first UV monitor and UV monitor **U9-L** will be the second.

Note: *When using two UV monitors, the signal from the first UV monitor is by default used for peak fractionation. This can be changed by editing the text instruction* ***Fraction Collection:Peak fractionation parameters:Signal source*** *and choosing* ***UV 2nd*** *as* ***Signal source****.*

Note: *When using two UV monitors with different cell lengths to increase the UV absorption dynamic range, the signal from UV monitor* ***U9-L*** *comes from the real cell length and has to be calibrated for exact calculations. The signal from UV monitor* ***U9-M*** *is automatically calibrated to nominal cell length.*

System properties

Follow the instruction to update the system properties.

Step	Action
1	Open the system properties ***Edit*** dialog box.
2	In the ***Component types*** list, click ***Monitors and sensors***.
3	Select the ***UV monitor 2nd (U9-L)*** check box in the ***Component selection*** list. Then click ***OK***.

System settings

If the UV monitor **U9-L** is placed between the UV monitor **U9-M** and the outlet valve , or if the UV monitor **U9-L** is the peak fractionation controlling UV monitor the delay volume has to be updated. See *Check or set delay volumes, on page 151*.

The UV absorption signal from the UV monitor **U9-L** is correlated to the real cell length. If it is important to have absorption signals correlated to the nominal cell length a calibration should be done.

4.12 I/O-box

About this section

This section provides an overview of the function, connectors and signals of the I/O-box **E9**.

In this section

This section contains the following subsections:

Section	See page
4.12.1 Overview of the I/O-box	142
4.12.2 Analog connector and signals	144
4.12.3 Digital connector and signals	146
4.12.4 Connect external equipment to the I/O-box	148

4.12.1 Overview of the I/O-box

Function of the I/O-box

The I/O-box **E9** is used to interface other equipment in order to measure parameters such as refractive index, light scattering and fluorescence. See *Requirements on connected equipment, on page 148* for information on requirements of the equipment that can be connected to ÄKTA avant. The I/O-box can control external equipment by a digital output signal, as well as detecting the state of them by digital inputs. It is also possible to send out internal detector signals to external equipment.

Using two I/O-boxes

It is possible to install up to two I/O-boxes when using ÄKTA avant. If two I/O-boxes are to be used, the second I/O-box has to be configured as I/O-box E9, 2nd. The configuration is defined by the Node ID of the I/O-box. The Node ID is set by positioning the arrow of two rotating switches at the back of the I/O-box, see *Connectors, on page 143* and *Section 9.15 Check and change the Node ID of a module, on page 510*.

Location

The most common placement of the I/O-box, with the adhesive feet attached, is on the laboratory bench on the right-hand side of the instrument main wet surface, close to the UniNet ports. It is an advantage to have the external equipment that is going to be connected close to the I/O-box on the same side of the instrument. The I/O box can also be placed on a Rail extension rod, see *Rail extension, on page 49*.

Connectors

Part	Description
Analog in/out	Signal connector for analog input and output signals.
UniNet-9	Connector used to connect the I/O-box to the ÄKTA avant instrument.
Status	Status indicator for service purposes.
Node ID	Switches used to configure **I/O-box E9** as I/O-box E9 or I/O-box E9, 2nd.
Digital in/out	Signal connector for digital input and output signals.

4.12.2 Analog connector and signals

Analog connector pins

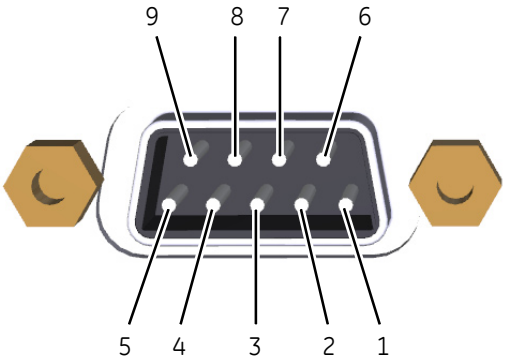

Part	Function
1	Analog in signal 1 +
2	Analog in signal 1 - (or signal ground)
3	Shield, analog in (both ports)
4	Analog in signal 2 +
5	Analog in signal 2 - (or signal ground)
6	Calibration pin for service purposes Analog out signal (1.9 V) ***Note:*** *Do not use for other purposes.*
7	Analog out signal 1
8	Signal ground, analog out (both ports)
9	Analog out signal 2

Analog signals

All analog input and output signals are confined to the same **Analog in/out** connector.

Analog input signals

There are two analog input channels from which analog input signals can be used for peak detection, or data collection in UNICORN. It is possible to auto-zero the input signals, which means that the current value will be displayed as 0 V in UNICORN. This can be done individually for the two analog input channels. The auto-zero value is saved between runs and power-offs. The auto-zero value can be reset.

Parameter	Description
Input signal range	-2000 to 2000 mV

Analog output signals

There are two analog output channels from which analog output signals and system parameters, that is, UV, cond, conc B, temperature and pH, are transferred to the external connected equipment, for example, light scattering detectors or plotters.

Parameter	Description
Output signal range	-1000 to 1000 mV
Default output	The user defines the default output level for the selected signal.
Full scale output	The user sets the desired output signal value of, e.g., mAU, % or mS, which will corresponds to the full scale output voltage 1000 mV.
Negative full scale output	The corresponding negative full scale output value is set automatically. For example, if the full scale output is set to 2000 mAU, a UV value of 500 mAU will give an output voltage of 250 mV, and -100 mAU will give -50 mV output voltage. A signal value of 0 mAU, 0% or 0 mS will always give an output voltage of 0 mV.
Fix point	Zero is always a fix point. A desired output signal of, i.e., 0 mAU, 0% or 0 mS corresponds to an output voltage of 0 mV. At power-on, an output signal of 0 mV is transferred to the connected equipment, until the output signal range values are set.

Note: *No warning will be displayed in UNICORN if the analog output signal exceeds the set full scale output value or is less than the set negative full scale output value.*

4.12.3 Digital connector and signals

Digital connector pins

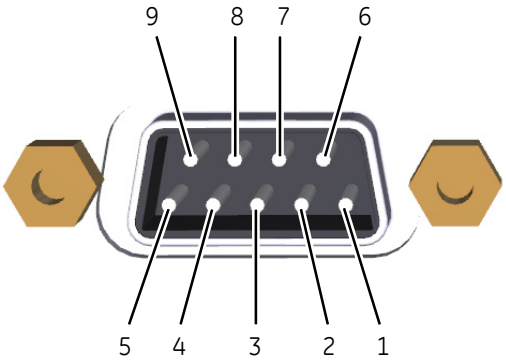

Part	Function
1	Digital in signal 1
2	Digital in signal 2
3	Digital in signal 3
4	Digital in signal 4
5	Signal ground
6	Digital out signal 1
7	Digital out signal 2
8	Digital out signal 3
9	Digital out signal 4

Digital signals

All digital input and output signals will be confined to the same D-sub connector and have a common ground. The four input signals will be scanned synchronously, and the outputs will be set synchronously.

Digital input signals

The digital in-signal can be used to monitor external equipment by registering, for example, error signals or event marks. An event mark can be used as a trigger for watches. The measured digital signals can be shown as a curve in UNICORN. The unit will handle both open/closed circuit and TTL-type voltage signals. An open circuit is interpreted as logical 1 and a closed circuit as logical 0.

Note: *A closed circuit is always closed against signal ground.*

Input connection	UNICORN interpretation
Open circuit	Logical 1
Applied voltage 3.5 to 5.0 V	
Closed circuit	Logical 0
Applied voltage 0 to 0.8 V	

Digital output signals

The digital output signal can be used to control external equipment that can receive digital signals, such as pumps or fraction collectors. The digital output signals define an open or closed circuit, where a logical 1 will result in an open circuit and a logical 0 will give a closed circuit. The default level, 1 or 0, is set by the user. The level can be changed by instructions either manually, in ***System Settings*** or by a method. It is possible to send pulses from the current level, with a pulse length of 0.1 s to 10 s.

Note: *A closed circuit is always closed against signal ground.*

4.12.4 Connect external equipment to the I/O-box

Requirements on connected equipment

The physical requirements for the connected equipment is described in the following tables. All connected equipment must have a common grounding.

Analog input

Parameter	Value
Channels	2
Range	±2000 mV
Input impedance	1 MΩ
Accuracy	±(0.1% + 0.2 mV)

Analog output

Parameter	Value
Channels	2
Range	±1000 mV
Input impedance	100 kΩ
Accuracy	±(0.3% + 1 mV)

Digital input

Parameter	Value
Channels	4
Compatibility	TTL, open/closed circuit

Digital output

Parameter	Value
Channels	4
Compatibility	Open/closed circuit

Required material

The following material is required:

- Flat-blade screwdriver, 2 mm
- Shielded cable with 9 conductors, 4 to 8 mm diameter
- Wire stripping tool

Instruction

Follow the instructions to connect one or two external cables to the supplied D-sub connectors.

Step	Action
1	Open the connector housing by removing housing screw and unlatch the housing top shell using a flat-blade screwdriver.
2	Locate the connection block mounted on the PCB board. The screw terminals has numbers corresponding to the connector contacts. 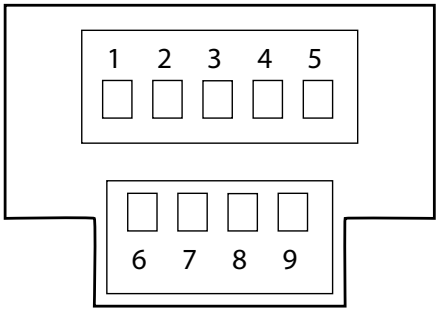
3	Strip the signal cable. • Strip-off 50 mm of the shield insulator. • Strip-off 4 mm of the single conductor insulation.
4	Loosen the strain relief clamp and insert the cable with the shield under the strain relief clamp. Fasten the strain relief clamp over the cable shield. ***Tip:*** *The connection block can be rotated inside the housing in order to position the screw terminals for left side or right side cable entry.*
5	Insert and fasten the single conductors in the screw terminals.
6	Close the housing top shell with the latch and screw the housing together.

System properties

Follow the instruction to update the system properties.

Step	Action
1	Open the system properties ***Edit*** dialog box.
2	In the ***Component types*** list, click ***Other***.
3	Select the ***I/O-box (E9)*** or ***I/O-box 2 (E9)*** check box in the ***Component selection*** list. Then click ***OK***.

System settings

Default values for digital out ports, noise reduction and configuration of analog out ports can be set.

Instruction name	Description
Digital out X	Sets the value of the signal sent out by digital port number X to either 0 or 1. The default value is 1.
Noise reduction analog in X	Filters the noise in the analog signal in port number X.
Alarm analog in X	Enables or disables the alarm for the analog signal in port number X. When enabled, it sets the alarm limits for the analog signal. If the alarm is enabled and the analog signal falls outside the set limits, an alarm will be triggered and the method will be paused.
Alarm digital in X	Enables or disables the alarm for the signal in digital port number X. The alarm can be triggered by either of the signal values, 0 or 1. If the alarm is enabled and the condition set in 'Value' occurs, an alarm will be triggered and the method will be paused.
Configure analog out X	Enables the user to send one of the pre-defined signals (UV signal, conductivity, temperature, pH or concentration of eluent B) to the analog out port number X, and also to set the range of that signal.

Note: *The delay volume has to be updated if an external component is added to the flow path.*

4.13 General system settings

Check or set delay volumes

When a module has been installed after the UV monitor in the flow path, the delay volume has to be adjusted in the ***System Setting*** dialog box in UNICORN, to make sure that the collected fractions correspond to the fractions indicated in the chromatogram.

Delay volumes can be set for the options ***Detector-Frac***, ***Detector-Outlet valve***, ***Restrictor volume***, and ***pH cell volume***. The delay volume has to be set for all displayed options.

Delay volumes for modules and standard tubing configurations are found in *Section 9.12 Delay volumes, on page 500*.

Follow the instructions to check/set the delay volumes:

Step	Action
1	In the ***System Control*** module, click ***Settings*** on the ***System*** menu. *Result:* The ***System Settings*** dialog box opens.
2	In the ***System Settings*** dialog box, select ***Fraction collection:Delay volumes*** 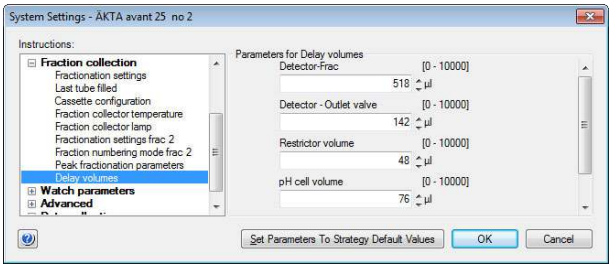
3	Enter new values in the ***Detector-Frac***, ***Detector-Outet valve***, ***Restrictor volume***, and ***pH cell volume*** fields if necessary Click ***OK***.

Lock and unlock the instrument display

Follow the instruction below to lock or unlock the ***Pause*** and ***Continue*** buttons of the instrument display from UNICORN.

Step	Action
1	In the ***System Control*** module, click ***Settings*** on the ***System*** menu. *Result:* The ***System Settings*** dialog box opens.

Step	Action
2	In the ***System Settings*** dialog box: • Select ***Advanced:Instrument display***. • Click ***Locked*** or ***Unlocked***. • Click ***OK***. 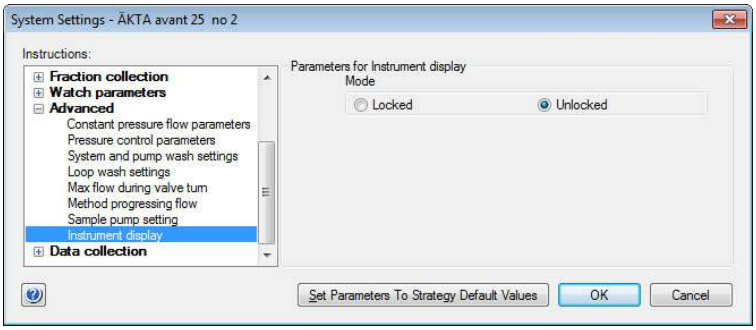

5 Operation

About this chapter

This chapter describes the steps involved when operating ÄKTA avant.

In this chapter

This chapter contains the following sections:

Section	See page
5.1 Before you prepare the system	154
5.2 Prepare the flow path	155
5.3 Start UNICORN and connect to the system	160
5.4 Prime inlets and purge pump heads	163
5.5 Connect a column	180
5.6 Set pressure alarms	185
5.7 Sample application	187
5.8 Fractionation	200
5.9 Create a method and perform a run	222

5.1 Before you prepare the system

Introduction

It is important to prepare the standard system in accordance with the settings in the method to be run. Before preparing the system, check the settings in the ***Method Editor*** and make sure that all accessories to be used are available.

Checklist

Make sure to prepare the system in accordance with the settings in the method to be run. Make sure that you understand:

- which valve ports to use for inlets and outlets
- which column type to use
- which column position to use
- which buffers and samples to prepare
- which sample application technique to use
- that the pH electrode is connected and calibrated, if applicable
- which cassettes with corresponding deep well plates and/or tubes to use in the Fraction collector, if applicable

5.2 Prepare the flow path

Introduction

This section describes the preparation of inlet tubing, outlet tubing, waste tubing and mixer. For an illustration of the standard typical flow path, see *Section 2.4 Liquid flow path, on page 33*.

Select Mixer chamber

To obtain a homogeneous buffer composition, it is important to use a Mixer chamber suitable for the flow rate of the method. The tables below show what Mixer chambers to use in ÄKTA avant 25 and ÄKTA avant 150 at different flow rates.

For information on how to install a Mixer chamber, refer to *Section 7.8.2 Replace the Mixer, on page 335*.

Note: *If the liquids are difficult to mix, use a larger Mixer chamber to achieve optimal mixing. However, note that a larger Mixer chamber distorts and delays the gradient.*

ÄKTA avant 25

Three different Mixer chambers are delivered with ÄKTA avant 25. Their volumes are: 0.6 ml, 1.4 ml (mounted at delivery) and 5 ml.

Mixer chamber volume (ml)	Flow rate (ml/min), Binary gradient	Flow rate (ml/min), Quaternary and BufferPro gradients
0.6	0.25 to 5	1 to 2 [1]
1.4	0.5 to 15	1 to 6
5	2 to 25	6 to 25

1 Technically it is possible to run BufferPro and Quaternary gradients below 1 ml/min, but gradient formation starts to become slow.

CAUTION

Risk of explosion. Do not use Mixer chamber 15 ml with an ÄKTA avant 25 system configuration. The maximum pressure for Mixer chamber 15 ml is 5 MPa (50 bar).

ÄKTA avant 150

Three different Mixer chambers are delivered with ÄKTA avant 150. Their volumes are: 1.4 ml, 5 ml (mounted at delivery), and 15 ml.

Mixer chamber volume (ml)	Flow rate (ml/min), Binary gradient	Flow rate (ml/min), Quaternary and BufferPro gradients
1.4	0.5 to 15	N/A
5	2 to 25	2 to 10
15	5 to 150	10 to 40

Inlet tubing size for ÄKTA avant 150 in BufferPro and quaternary gradients

When running BufferPro or quaternary gradients with ÄKTA avant 150 at flow rates below 10 ml/min, it is possible to optimize performance by changing the pieces of tubing marked **InA** and **InB** from standard tubing dimension i.d. 2.9 mm, o.d. 3/16" to tubing dimension i.d. 1.6 mm, o.d. 1/8" (delivered with the instrument).

Note: *Remember to change back to standard tubing size for higher flow rates.*

Select UV flow cells

Flow cells with shorter path lengths are suitable to use for high protein concentrations. Flow cells with longer path lengths are suitable to use for low protein concentrations.

UV flow cells for UV monitor U9-M

UV flow cells are available with three different path lengths; 0.5 mm, 2 mm (default) and 10 mm.

The real cell path length of the UV cell is automatically recognized by the monitor when a cell is fitted. The UV data is normalized to the nominal path length. This allows UV data from runs made with different UV flow cells (but with the same nominal path length) to be directly compared.

UV flow cells for UV monitor U9-L

UV flow cells for UV monitor **U9-L** are available with two different path lengths; 2 mm (default) and 5 mm. When replacing a UV flow cell, the path length must be set in the ***System Control*** module if concentration calculations will be done in the ***Evaluation*** module. Use the nominal flow cell length if the UV flow cell is replaced but not calibrated. See *Update the cell path length, on page 331* to set the flow cell path length.

The path length of the UV flow cell might differ from the nominal length, which leads to inexact results in the calculation of protein concentration in the eluate. To achieve normalized absorbance, the path length of the UV flow cell must be calibrated and the calculated flow cell path length set manually. See *Calibration of the second UV monitor flow cell length, on page 328*. This allows UV data from runs made with different UV flow cells (but with the same nominal path length) to be compared directly.

Prepare the inlet tubing

Connect inlet tubing to the inlet ports that are to be used, and place all inlet tubing that is to be used during the method run in the correct buffers.

Note: *When using high viscosity buffers or samples in combination with high flow rates it is recommended to change to tubing with larger inner diameter or shorten the length of the tubing.*

Prepare the outlet tubing

Connect outlet tubing to the outlet ports of Outlet valve that are to be used. If the external Fraction collector F9-R is to be used, make sure that the tubing is connected as described in *Connect tubing to the ÄKTA avant instrument, on page 132*, and prepare the fraction collector. Otherwise, place the outlet tubing in suitable tubes or flasks.

Prepare the waste tubing

All waste tubing is found on the rear of the instrument.

Part	Description
1	Waste tubing from the Injection valve, the pH valve and the Outlet valve (**W**, **W1**, **W2** and **W3**).
2	Waste tubing from the Fraction collector and the Buffer tray.

Instructions

The following steps describe how to prepare the waste tubing.

Step	Action
1	Place the four pieces of waste tubing from the Injection valve, the pH valve and the Outlet valve (**W**, **W1**, **W2** and **W3**) in a vessel placed below the bench.

NOTICE

The maximum level of the waste vessel for the waste tubing from the valves must be lower than 30 cm above the lab bench.

2	Place the three pieces of waste tubing from the Fraction collector and the Buffer tray in a waste vessel placed below the bench.

NOTICE

The maximum level of the waste vessel for the waste tubing from the Fraction collector and the Buffer tray must be lower than the bench height.

Step	Action
3	Cut the waste tubing from the Fraction collector and the Buffer tray to appropriate length. It is important that the tubing is not bent and will not be submerged in liquid during the run. ***Note:*** *If the tubing is too short, replace it with new tubing. Do not lengthen the tubing as this might cause obstruction of the tubing and flooding in the Frac chamber.*

CAUTION

Make sure that the waste vessels will hold all the produced volume of the run. For ÄKTA avant 25, a suitable waste vessel should typically have a volume of 2 to 10 liters. For ÄKTA avant 150, a waste vessel should have a volume of 40 liters.

Plug unused valve ports

It is recommended to plug all unused valve ports with stop plugs before starting a run. See *Section 9.3 Tubing and connectors, on page 429* for information about connectors.

5.3 Start UNICORN and connect to the system

Introduction

This section describes how to start and log on to UNICORN and how to connect the instrument to UNICORN.

Start UNICORN and log on

Follow the instructions to start UNICORN and log on to the program. A valid e-license must be available for the workstation. See UNICORN Administration and Technical Manual for more information about e-licenses.

Step	Action
1	Double-click the UNICORN icon on the desktop. *Result*: The ***Log On*** dialog box opens. ***Note:*** *If there is no connection to the database it is still possible to log on to UNICORN and control a running system. The **Log On** dialog box will give the option to start **System Control** without a database. Click **Start System Control** to proceed to the next **Log On** dialog box.*

Step	Action
2	In the ***Log On*** dialog box: • Click a user name in the ***User Name*** list and • enter the password in the ***Password*** field. ***Note:*** *It is also possible to select the **Use Windows Authentication** checkbox and enter a network ID in the **User Name** box.* • select which UNICORN modules to start. • click ***OK***. *Result*: The selected UNICORN modules open.

Connect to system

Follow the instructions to connect the instrument to UNICORN.

Step	Action
1	In the ***System Control*** module, • Click the ***Connect to Systems*** button, *or* • click ***Connect to Systems*** on the ***System*** menu. *Result:* The ***Connect to Systems*** dialog box opens. 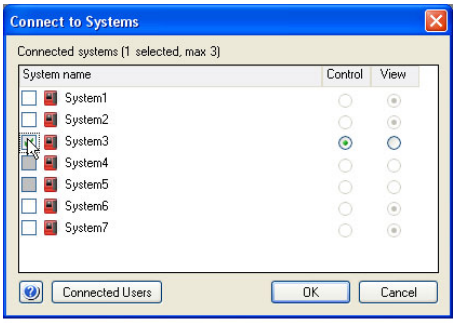
2	In the ***Connect to systems*** dialog box: • Select the checkbox in front of the system name. • To control the selected system, click ***Control***. • Click ***OK***. ***Note:*** *Instruments that are turned off or disconnected from the network appear dimmed and cannot be connected.* ***Tip:*** *To view the users currently connected to systems, either in control or view mode, click the* ***Connected Users*** *button.*

5.4 Prime inlets and purge pump heads

About this section

Before usage of a pump, it is important to:

- Prime the inlets (fill the buffer inlets with liquid).
- Purge the pump (remove air from the pump heads).

This section describes how to prime inlets and purge the pump heads of the system pumps and the sample pump.

Note: *Note that the procedures described in this section may have to be adapted if your system configuration differs from the one described in this manual.*

In this section

This section contains the following subsections:

Section	See page
5.4.1 Prime buffer inlets and purge system pumps	164
5.4.2 Prime sample inlets and purge Sample Pump	171
5.4.3 Prime Q inlets	176

5.4.1 Prime buffer inlets and purge system pumps

Overview

The procedure consists of the following stages:

Stage	Description
1	Prime all inlet tubing to be used during the run.
2	Validate priming of inlet tubing.
3	Purge System Pump B if pressure signal indicates air bubbles.
4	Validate purge of System Pump B.
5	Purge System Pump A if pressure signal indicates air bubbles.
6	Validate purge of System Pump A.
7	End the run.

Note: *To increase life length of the pump sealing rings, make sure that the pump rinsing system is filled with fresh rinsing solution.*

Tip: *The procedures for purging the pump heads and priming the inlets using the* ***Process Picture****, are described in the following topic. It is also possible to perform the procedures from the* ***Manual instructions*** *dialog box.*

Prime inlet tubing

Follow the instructions to fill all A and B inlet tubing to be used in the run with appropriate buffer/solution.

Step	Action
1	Make sure that all inlet tubing that is to be used during the method run is placed in the correct buffer.
2	Open the ***System Control*** module.

Step	Action
3	In the ***Process Picture***: • Click the inlet valve icons. (Click both the ***Inlet A*** and ***Inlet B*** icons, one at a time, if both inlets are to be primed.) • Click the position of the inlet to be filled. Fill the positions in reverse alphabetical order and start with the highest number. For example, if all the seven inlets in Inlet Valve B are to be filled, click them in the following order: B7, B6 . . . B1, assuming that B1 is the starting buffer. *Result:* The inlet valve switches to the selected port.
4	Connect a 25 to 30 ml syringe to the purge valve of one of the pump heads of System Pump B. Make sure that the syringe fits tightly into the purge connector. 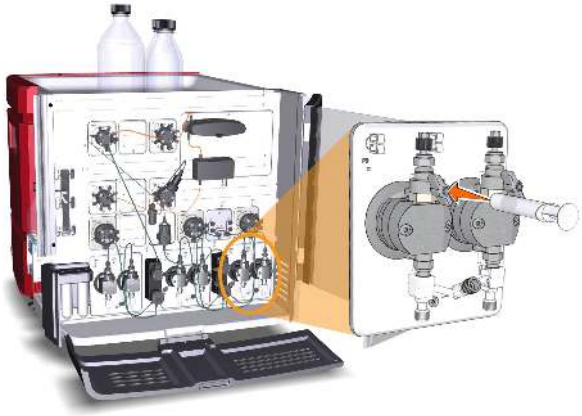
5	Open the purge valve by turning it counter-clockwise about three quarters of a turn. Draw liquid slowly into the syringe until the liquid reaches the pump.
6	Close the purge valve by turning it clockwise. Disconnect the syringe and discard its contents.
7	Repeat steps 3 to 6 for each piece of inlet tubing that is to be used during the run. In the final inlet position, draw liquid into the syringe through both purge valves.

Step	Action
8	Check that there is no air left in the pump by following the instructions in *Validate prime or purge of System Pump A or B or Sample Pump, on page 170*. If air bubbles are indicated, follow the instructions in *Purge System Pump B, on page 166*

Purge System Pump B

If the priming was done thoroughly and the final buffer was drawn all the way into the syringe and the validation of the priming showed that there was no air left in the pump it is not necessary to purge System Pump B.

However, if the pressure signal indicated air bubbles left in the pump, follow these instructions to purge both pump heads of System Pump B:

Step	Action
1	Make sure that the piece of waste tubing connected to the injection valve port **W1** is placed in a waste vessel.
2	In the ***Process Picture***: • Click the ***Injection valve*** icon and then click ***System pump waste***. *Result:* The injection valve switches to waste position. This is necessary to achieve a low back pressure during the purge procedure.

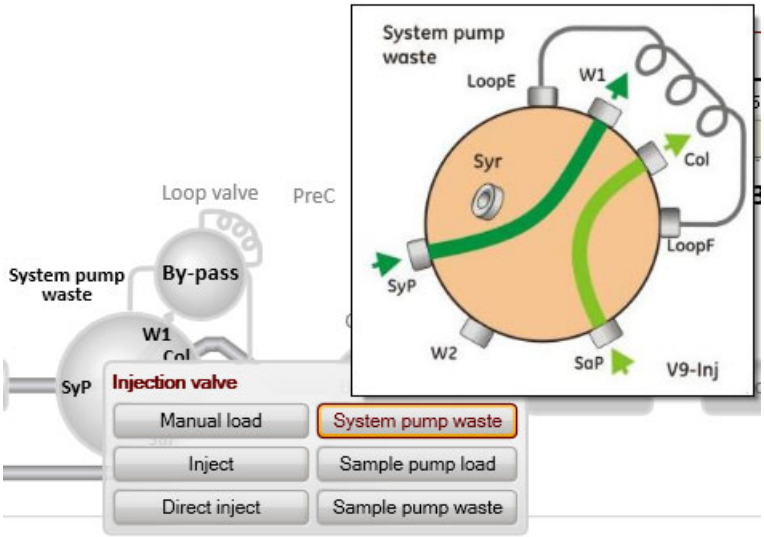

Step	Action
3	In the ***Process Picture***: • Click the ***Inlet valve B*** icon. • Click the position of one of the inlets that will be used at the beginning of the run. 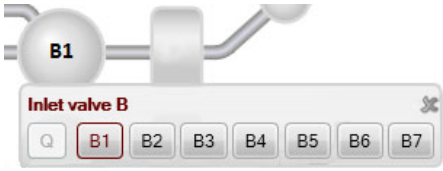 *Result:* The inlet valve switches to the selected port.
4	In the ***Process Picture***: • Click the ***System pumps*** icon. • Set ***Conc % B*** to 100% B and click ***Set % B***. 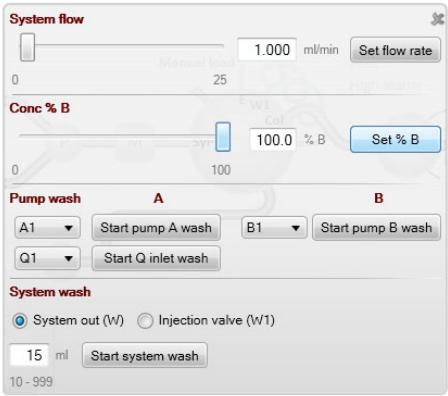 • Set the ***System flow*** to 1.0 ml/min for ÄKTA avant 25 or 5.0 ml/min for ÄKTA avant 150. • Click ***Set flow rate***. *Result:* Only System Pump B is active, and a system flow through injection valve waste starts.

Step	Action
5	Connect a 25 to 30 ml syringe to the purge valve of the left pump head of System Pump B. Make sure that the syringe fits tightly into the purge connector. 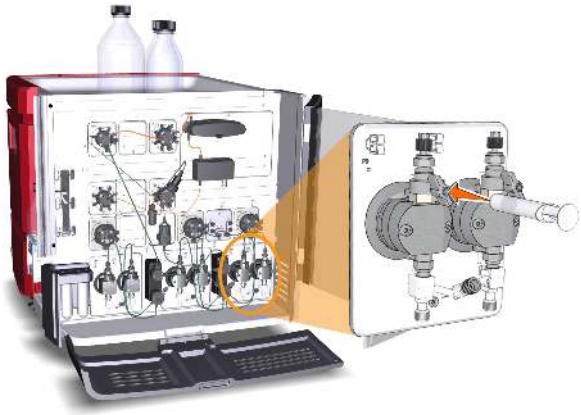
6	Open the purge valve by turning it counter-clockwise about three quarters of a turn. Draw 5 to 10 ml of liquid slowly into the syringe with a rate of about 1 ml/s.
7	Close the purge valve by turning it clockwise. Disconnect the syringe and discard its contents.
8	Connect the syringe to the purge valve on the right pump head of System Pump B, and repeat steps 6 to 8. Keep the system flow running. 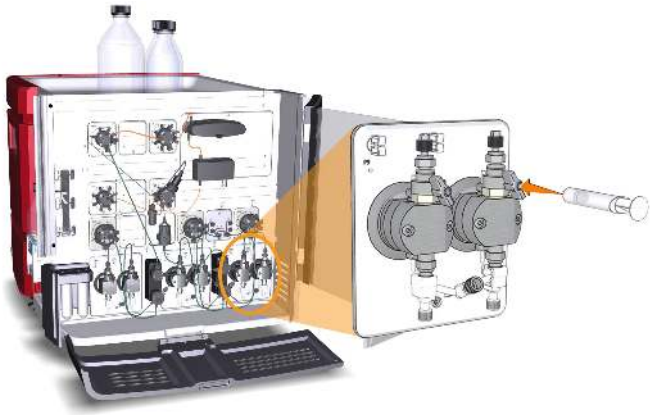
9	Check that there is no air left in the pump by following the instructions in *Validate prime or purge of System Pump A or B or Sample Pump, on page 170*.

Purge System Pump A

Purge both pump heads of System Pump A by following the same procedure as in *Purge System Pump B, on page 166*, but replace step 3 and 4 with the following:

Step	Action
3	In the ***Process Picture***: • Click the ***Inlet valve A*** icon. • Click the position of one of the inlets that will be used at the beginning of the run. *Result:* The inlet valve switches to the selected port.
4	In the ***Process Picture***: • Click the ***System pumps*** icon. • Set ***Conc % B*** to 0% B and click ***Set % B***. 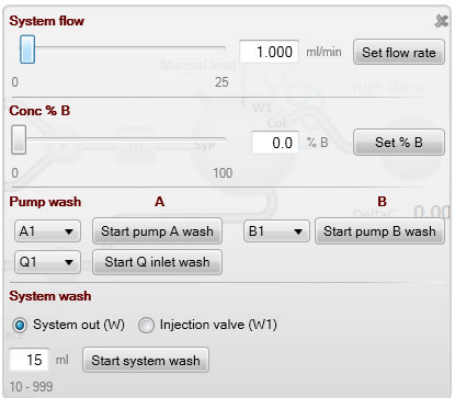 *Result:* Only System Pump A is active.

Validate prime or purge of System Pump A or B or Sample Pump

Follow these instructions to check that there is no air left in the pump after performing a prime or a purge.

Step	Action
1	In the ***Process Picture***: • Click on the ***Injection valve*** and select ***Manual load***. *Result:* The injection valve switches to manual load position. 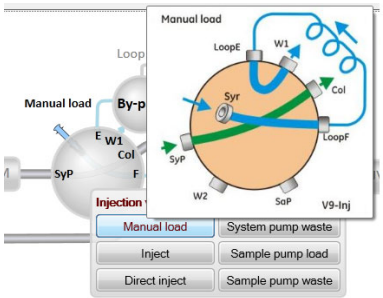
2	Make sure that the pump flow is on.
3	In the ***Chromatogram*** pane: • Check the ***PreC pressure*** curve. • If the ***PreC pressure*** do not stabilize within a few minutes there may be air left in the pump. Purge the pump once more then see *Section 8.6 Troubleshooting: Pumps, on page 394*.

End the run

Click the ***End*** button in the ***System Control*** toolbar to end the run.

5.4.2 Prime sample inlets and purge Sample Pump

Overview

The procedure consists of the following stages:

Stage	Description
1	Prime all sample inlet tubing to be used during the run.
2	Validate priming of inlet tubing.
3	Purge the sample pump if pressure signal indicates air bubbles.
4	Validate purge of the samle pump.
5	End the run.

Note: *To increase life length of the pump sealing rings, make sure that the pump rinsing system is filled with fresh rinsing solution.*

Prime sample inlets

Follow the instructions below to fill all sample inlet tubing, to be used in the run, with appropriate buffer or sample solution.

Step	Action
1	Make sure that all sample inlet tubing that is to be used during the method run is immersed in the correct samples or buffer.
2	Make sure that the waste tubing connected to injection valve port **W2** is immersed in a waste vessel.
3	Open the ***System Control*** module.

Step	Action
4	In the ***Process Picture*** • Click the ***Sample inlet valve*** icon. • Select the position of the inlet to be filled. Start at the inlet position with the highest number and end at the position with the lowest number or the buffer position (assuming that the first sample to run is connected to inlet 1 etc.). *Result:*The sample inlet valve switches to the selected port.
5	Connect a 25 to 30 ml syringe to one of the purge valves of the pump heads in the sample pump. Make sure that the syringe fits tightly into the purge connector. 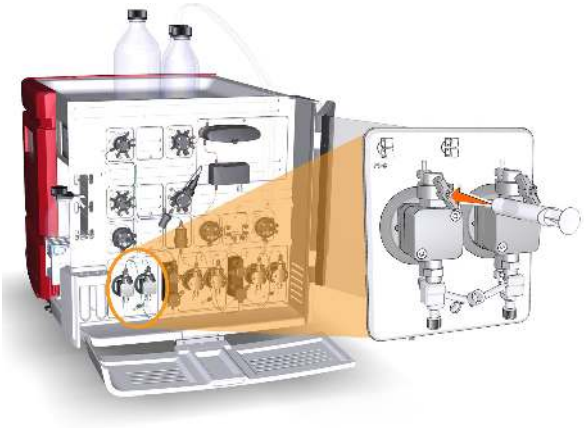
6	Open the purge valve by turning it counter-clockwise about three-quarters of a turn. Draw slowly with the syringe until the sample just passes the Sample inlet valve.
7	Close the purge valve by turning it clockwise. Disconnect the syringe and discard its contents.
8	Repeat steps 4 to 7 for each sample inlet that is to be used in the method run. The final sample or the buffer from the buffer position should be drawn all the way through both pump heads into the syringe.

Step	Action
9	Check that there is no air left in the pump by following the instructions in *Validate prime or purge of System Pump A or B or Sample Pump, on page 170*. If air bubbles are indicated, follow the instructions in *Purge Sample Pump, on page 173*.

Purge Sample Pump

If the priming was done thoroughly and the final buffer was drawn all the way into the syringe and the validation of the priming showed that there was no air left in the pump it is not necessary to purge the sample pump.

However, if the pressure signal indicated air bubbles left in the pump, follow the instruction below to purge both the pump heads of the sample pump.

Step	Action
1	Make sure that all sample inlet tubing that is to be used during the method run is immersed in the correct buffers.
2	Make sure that the waste tubing connected to injection valve port **W2** is immersed in a waste vessel.
3	Open the ***System Control*** module.
4	In the ***Process Picture***: • Click the ***Injection valve*** icon, and then click ***Sample pump waste***. 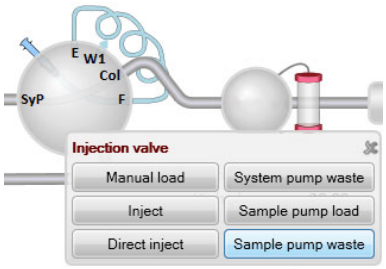 *Result:* The injection valve switches to waste position. This is necessary to achieve a low back pressure during the purge procedure.

Step	Action
5	In the ***Process Picture***: • Click the ***Sample inlet*** icon, then click ***Buffer***. • Click the ***Sample pump*** icon: Set the ***Sample flow*** to 1.0 ml/min for ÄKTA avant 25 or 5.0 ml/min for ÄKTA avant 150. 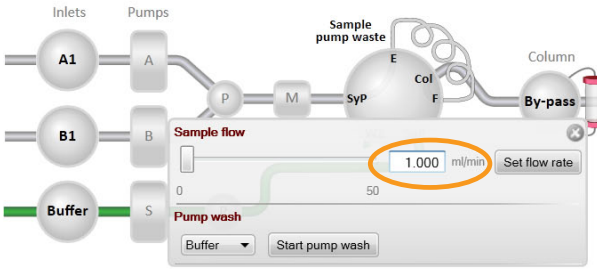 • Click ***Set flow rate***. *Result:* The sample pump flow starts.
6	Connect a 25 to 30 ml syringe to the left purge valve of the sample pump. Make sure that the syringe fits tightly into the purge connector. 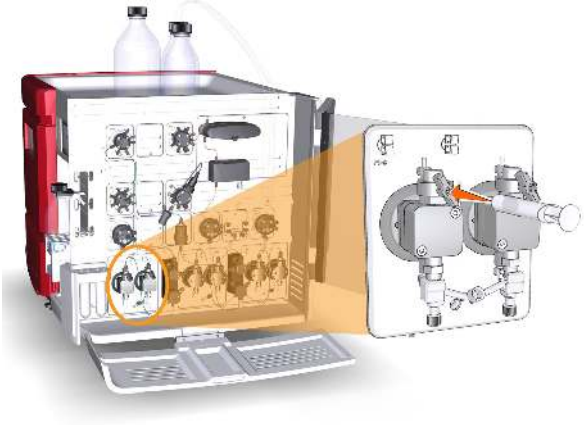
7	Open the purge valve by turning it counter-clockwise about three-quarters of a turn. Draw 5 to 10 ml of liquid slowly into the syringe with a rate of about 1 ml/s.
8	Close the purge valve by turning it clockwise. Disconnect the syringe and discard its contents.

Step	Action
9	Connect the syringe to the right purge valve on the sample pump, and repeat step 6 to 8. 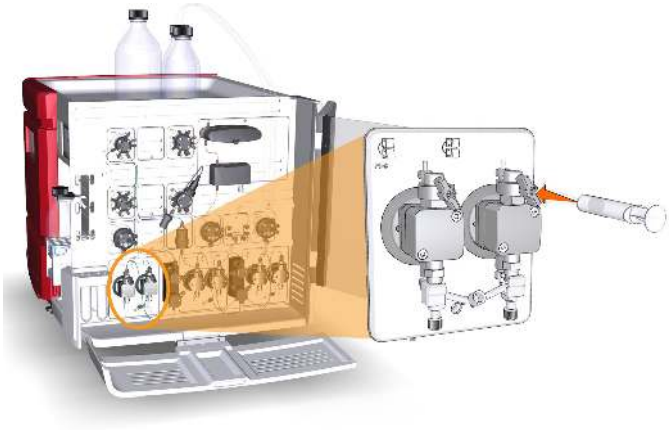
10	Check that there is no air left in the pump by following the instructions in *Validate prime or purge of System Pump A or B or Sample Pump, on page 170*.

End the run

Click the ***End*** button in the ***System Control*** toolbar to end the run.

5.4.3 Prime Q inlets

Overview

The procedure consists of the following stages:

Stage	Description
1	Prime all Q inlet tubing.
2	Validate priming of Q inlet tubing.
3	Purge Quaternary Valve and the system pumps if pressure signal indicates air bubbles.
4	Validate purge of Quarternary Valve and system pumps.
5	End the run.

Prime the Q inlets

Follow the instructions to prime the Q inlets.

Step	Action
1	Make sure that the pieces of inlet tubing marked **A1**, **B1** and **Q1-Q4** are immersed in the correct buffers. The **A1** and **B1** positions are used for pump synchronization and these lines should already be primed.
2	In the ***Manual instructions*** dialog box: • Select ***Pumps and pressures:Quaternary start concentrations***. • Set ***Start concentration Q1*** to 100%. Make sure that the other start concentrations are set to 0%. 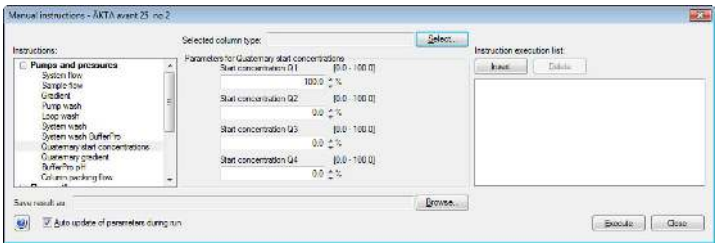 • Select ***Pumps and pressures:System flow*** and set ***Flow rate*** to 0.01 ml/min.

Step	Action
3	Connect a 25 to 30 ml syringe to one of the purge valves of either of the system pumps. Make sure that the syringe fits tightly into the purge connector. 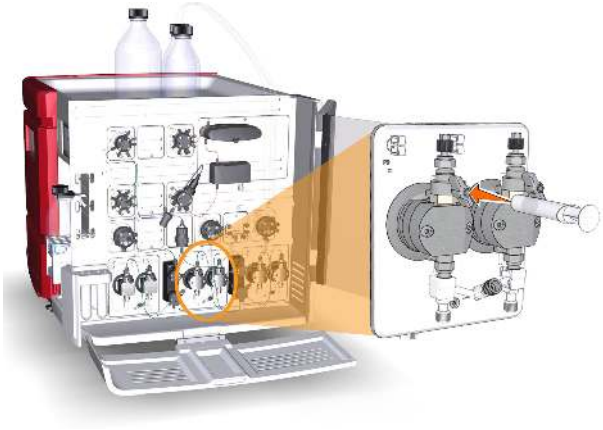
4	Open the purge valve by turning it counterclockwise about 3 quarters of a turn. Draw 10 ml of liquid into the syringe. Check that the **Q1** inlet is filled with liquid.
5	Close the purge valve by turning it clockwise. Disconnect the syringe and discard its contents.
6	Repeat steps 2 to 5 for **Q2**, **Q3** and **Q4** respectively by setting the respective ***Quaternary start concentration*** to 100%. ***Tip:*** *The inlet tubing that is immersed in distilled water should be the last piece of inlet tubing to be primed.* ***Tip:*** *If you will perform a BufferPro run, end with either **Q1** or **Q2**.*
7	Check that there is no air left in the pump by following the instructions in *Validate prime or purge of System Pump A or B or Sample Pump, on page 170*. If air bubbles are indicated, follow the instructions in *Purge Quaternary Valve and the system pumps, on page 178*.

Purge Quaternary Valve and the system pumps

If the priming was done thoroughly and the final buffer was drawn all the way into the syringe and the validation of the priming showed that there was no air left in the pump it is not necessary to purge Quaternary Valve and the system pumps.

However, if the pressure signal indicated air bubbles left in the valve or the pump, follow these instructions to purge Quaternary Valve, System Pump A and System Pump B. Note that both pump heads of each system pump have to be purged.

Step	Action
1	In the ***Manual instructions*** dialog box: • Select ***Pumps and pressures:Pump wash***, and click ***All*** in the ***BufferPro / Q inlets*** list. 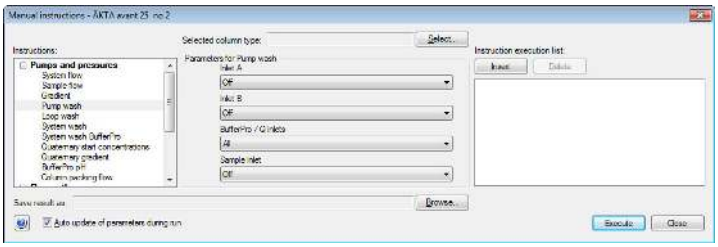 *Result:* A simultaneous pump wash of all the Q inlets is started. This will remove air from Quaternary Valve.
2	Wait until the pump wash is completed. • Select ***Pumps and pressures:Quaternary start concentrations***. • Set ***Start concentration Q1*** to 100%. Make sure that the other start concentrations are set to 0%.
3	Select ***Pumps and pressures:System flow*** and set ***Flow rate*** to 0.01 ml/min.

Step	Action
4	Connect a 25 to 30 ml syringe to the left purge valve of the selected system pump. Make sure that the syringe fits tightly into the purge connector. 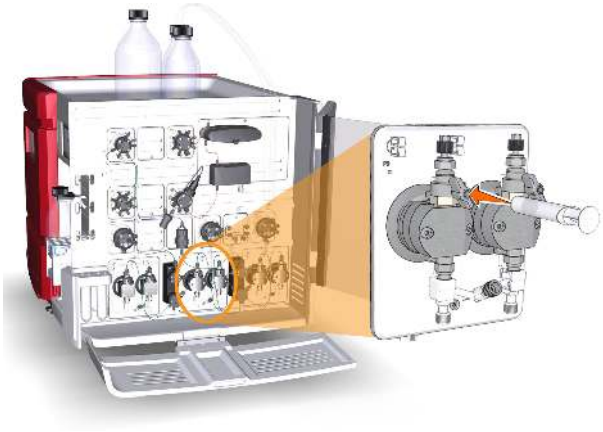
5	Open the purge valve by turning it counterclockwise about 3 quarters of a turn. Draw 10 ml of liquid slowly into the syringe with a rate of about 1 ml per second.
6	Close the purge valve by turning it clockwise. Disconnect the syringe and discard its contents.
7	Repeat steps 3 to 5 for the other three purge valves of the system pumps to get rid of air in all pump heads. Keep the system flow running during this procedure.
8	Check that there is no air left in the pump by following the instructions in *Validate prime or purge of System Pump A or B or Sample Pump, on page 170*.

End the run

Click the ***End*** button in the ***System Control*** toolbar to end the run.

5.5 Connect a column

Introduction

This section describes how to connect a column to the instrument using a column holder and without introducing air into the flow path. Several types of column holders are available for the ÄKTA avant instrumen, see *Section 2.6 Accessories, on page 41*.

WARNING

Before connecting a column, read the instructions for use of the column. To avoid exposing the column to excessive pressure, make sure that the pressure limit is set to the specified maximum pressure for the column.

Methods automatically include pressure alarms based on the specifications of the chosen column type. However, when running manual runs you have to set the pressure limits yourself. Also, to protect the column media, special settings are needed. See *Section 5.6 Set pressure alarms, on page 185* for more information on pressure alarms.

Note: *Do not overtighten when connecting columns. Overtightening might rupture the connectors or squeeze the tubing and thereby result in high back pressure.*

Attach a column holder and connect a column

Follow the instructions to connect a column to the instrument. Always use a column holder. The column is connected to two opposite parts of the column valve, using appropriate tubing and connectors.

Step	Action
1	Attach an appropriate column holder to the rail on the instrument.

2	Attach the column to the column holder.

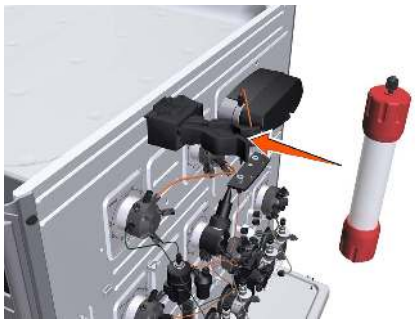

Step	Action
3	Connect a suitable tubing to a column valve port, for example port **1A** if column position 1 was chosen in the method to be run.

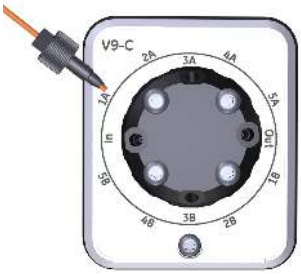

4 In the ***Process Picture***:

- Click the ***Column valve*** icon.
- Click, e.g., ***Position 1*** and ***Down flow***.

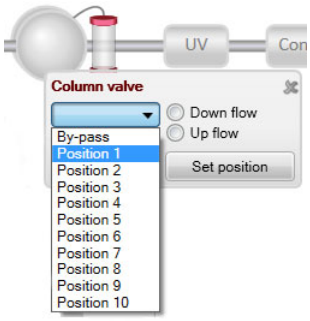

- Click **Set position**

Result: The column valve switches to position ***1***.

Step	Action
5	In the ***Process Picture***: • Click the ***System pumps*** icon. • Enter a low ***System flow*** (e.g., 0.2 ml/min). • Click ***Set flow rate***. 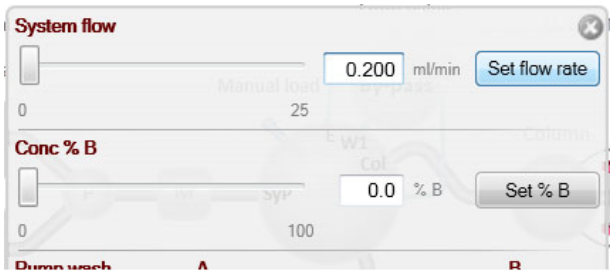 *Result:* A system flow of 0.2 ml/min starts.
6	When buffer leaves the tubing on port **1A** (if port **1A** was chosen in the method to be run) in a continuous mode and the top part of the column is filled with buffer, connect the tubing to the top of the column.

Step	Action
7	Connect a piece of tubing to the bottom of the column.
8	When buffer leaves the tubing at the bottom of the column in a continuous mode, connect this piece of tubing to the column valve. Use the port opposite to the one already connected to the column, in this example port **2B**.
9	Click the ***End*** button in the ***System Control*** toolbar to end the run.

Register columns

See UNICORN Method Manual for information on how to register columns in UNICORN

5.6 Set pressure alarms

Introduction

The columns can be protected by two different types of pressure alarms:

- The pre-column pressure alarm protects the column hardware.
- The delta-column pressure alarm protects the column media.

The column valves **V9-C** and **V9H-C** have built-in pressure sensors that automatically measure the pre-column and delta-column pressure.

See the instructions in the next topic to set the pressure alarm for the column to be used in the run and, if applicable, to set the parameters for the tubing dimensions.

Note: *Remember to lower the system pressure alarm and sample pressure alarm if the optional UV Monitor **U9-L** and/or the optional second Conductivity Monitor **C9** is used on the high pressure side in the system (before the column[s]).*

NOTICE

UV and conductivity flow cells on the high pressure side. When placing UV and/or conductivity flow cells on the high pressure side of the column, the UV flow cell has a maximum pressure limit of 2 MPa (20 bar) and the conductivity flow cell has a maximum pressure limit of 5 MPa (50 bar).

Pre-column pressure alarms

It is important that the pre-column pressure alarm is set during all runs where a column is used. The pressure alarm can be set in: the method to be run, the ***System Settings*** dialog box, or during a manual run.

Pre-column pressure alarm limits are automatically set in the method when a column from the column list is selected in the method. Refer to UNICORN Method Manual for more information on pressure alarms.

Set pressure alarms

Pressure alarm limits may be set manually in ***System Control***. The example below describes how to set the high pressure limit for the column. Other alarms are set in a corresponding way.

Step	Action
1	In the ***System Control*** module, on the ***Manual*** menu, click ***Execute Manual Instructions*** . *Result:* The ***Manual instructions*** dialog box opens.
2	In the ***Instructions*** box, select ***Alarms:Alarm pre column pressure***. 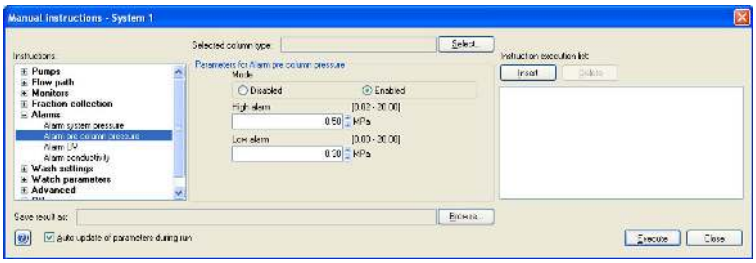
3	Click ***Enabled*** in the ***Mode*** field.
4	• Enter the high pressure limit in the ***High alarm*** box. • Click ***Execute***.

Note: *For more information on pressure alarms, including the* ***Low Alarm*** *parameter, see* *Section 9.7.4 System settings - Pumps and pressures, on page 459*.

5.7 Sample application

Introduction

This section describes the different sample application techniques that can be used with ÄKTA avant. The table below shows the alternatives for sample application available in the ***Sample application*** phase of a method.

Sample application	Via	Compatible loops
Inject sample directly onto column	• Sample pump • Sample pump and air sensor	• Not applicable
Inject sample from loop	• Syringe • Sample pump	• Sample loop • Superloop, 10 ml • Superloop, 50 ml • Superloop, 150 ml

Note: *In order to avoid sample carry-over when switching techniques for loading samples, wash the valve with buffer between the loading of two different samples. For example, when switching from loading sample in the loop to loading sample directly onto the column with the valve in* ***Direct inject*** *position.*

When using a pump for sample application, it is important to prime inlets and purge the pump before using the pump to load the sample. See further instructions in *Section 5.4.2 Prime sample inlets and purge Sample Pump, on page 171*.

When loading sample using an external air sensor, the sensor should be installed according to *Adapter for air sensor, on page 47*.

In this section

This section contains the following subsections:

Section	See page
5.7.1 Sample application using direct injection into the column	189
5.7.2 Sample application using a Superloop	192
5.7.3 Sample application using a sample loop	197

5.7.1 Sample application using direct injection into the column

Introduction

There are two ways to load sample directly onto a column:

- a fixed volume is loaded, or
- all the sample is loaded.

Minimize sample loss

To minimize sample loss during direct injection of sample onto the column, sample remaining in the flow path will be pushed onto the column with buffer from the inlet valve. This step is called ***Finalize sample injection*** in the text instructions of the sample application phase of the method to be used. Refer to *Section 5.9 Create a method and perform a run, on page 222* for more information on methods and phases.

When preparing to inject...	Then...
a fixed volume of sample	• manually prime the sample inlet tubing with sample, see *Prime sample inlets, on page 171*. • in the ***Method editor***, make the following selections for the ***Sample Application*** phase of the method to be run: - select ***Inject sample directly onto column***, - select ***Inject fixed sample volume*** and set the volume to be injected. • make sure that the flow path from the sample inlet valve up to the injection valve will be filled with an appropriate buffer: - make sure that the buffer inlet tubing of the inlet valve is immersed in buffer, and - enable the function ***Wash sample flow path with buffer*** in the ***Sample application*** phase.

When preparing to inject...	Then...
all the sample	• in the ***Method editor***, make the following selections for the ***Sample Application*** phase of the method to be run: - select ***Inject sample directly onto column***, and - select ***Inject all sample using air sensor***. • manually prime the sample inlet tubing with sample or buffer, see *Prime sample inlets, on page 171*, and make sure that the tubing is immersed in sample before starting the run. • make sure that the flow path from the sample inlet valve up to the injection valve is filled with sample or an appropriate buffer and that the buffer inlet tubing is immersed in buffer.

Maximize precision and accuracy

To achieve full precision and accuracy when a volume of sample is injected directly onto the column, make the following selections in the ***Sample Application*** phase of the method to be run (refer to *Section 5.9 Create a method and perform a run, on page 222* for more information on methods and phases):

- select ***Inject sample directly onto the column***,

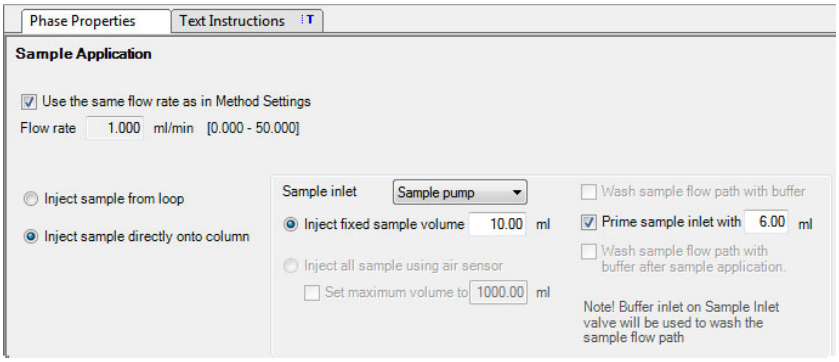

- select ***Inject fixed sample volume*** and set the volume to be injected,
- enable the function ***Prime sample inlet with*** and set the volume to be used for priming.

  Result: the step ***Finalize sample injection*** is automatically deactivated in order to maximize precision and accuracy. See *Minimize sample loss, on page 189* for more information.

  Note: *If manual priming of the flow path up to the injection valve is preferred, enable* ***Prime sample inlet with*** *but set the volume to 0 ml.*

5.7.2 Sample application using a Superloop

Introduction

A Superloop allows injection of large sample volumes onto the column. A Superloop can also be used for multiple injections, for example in a scouting experiment when the same application conditions are required. Superloop models are available in 10 ml, 50 ml and 150 ml sizes.

A superloop can be connected to either the Injection valve or the Loop valve. When using the Loop valve, up to five loops can be connected simultaneously.

Note: *After loading a Superloop, always plug the **Syr** port on the Injection valve with a Stop plug. With a Superloop connected to the valve, an over-pressure may be created during injection.*

Prepare the Superloop

To avoid injecting air into the system flow path, the Superloop should be prefilled with buffer manually, before fitting the Superloop to the system.

Note: *Read the instruction for the Superloop to be used.*

Connect the Superloop

The following steps describe how to connect the Superloop to the Injection valve or to the Loop valve.

Step	Action
1	Attach the Superloop to the instrument using a Column holder.
2	Connect a piece of tubing from the *top* of the Superloop to: • port **LoopE** on the Injection valve or • an **E** port, e.g., **1E**, on the Loop valve

Step	Action
3	Connect a piece of tubing from the *bottom* of the Superloop to: • port **LoopF** on the Injection valve or • the **F** port corresponding to the connected **E** port, e.g., **1F**, on the Loop valve

Fill the Superloop using a syringe

Follow the instruction below to fill the Superloop using a syringe.

Step	Action
1	Check if the system is in state ***Ready***. • If yes: The Injection valve is in position ***Manual Load*** per default. Continue to step 3. • If no: Continue to step 2 to position the valve.

Step	Action
2	In the ***Process Picture***: • Click the ***Injection valve*** and select ***Manual Load***. 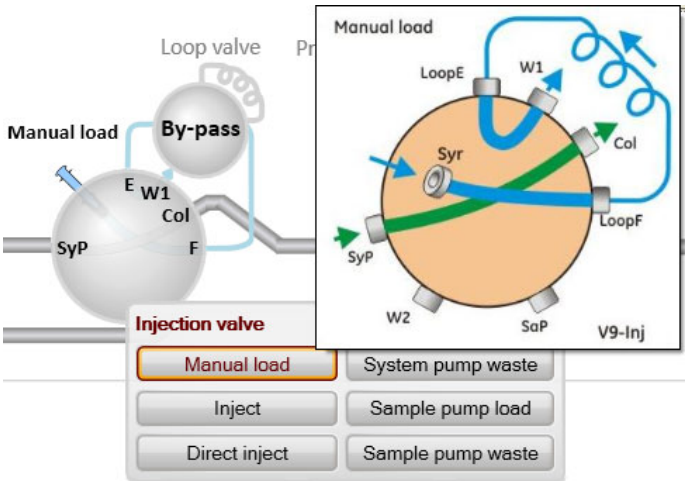 *Result:* The Injection valve switches to ***Manual Load*** position.
3	If the loop is connected to: • the Injection valve, continue to step 5. • the Loop valve, continue to step 4.
4	In the ***Process Picture***: • Click the ***Loop valve***. • Select the position the loop is connected to, for example ***Position 1***. 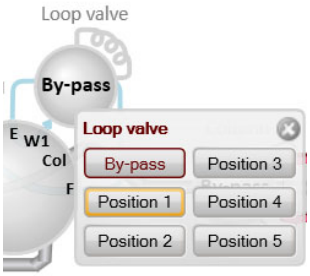 *Result:* The Loop valve switches to the selected position.
5	Fill a syringe with sample.
6	Connect the syringe to Injection valve port **Syr**.

Step	Action
7	Load sample into the Superloop by emptying the syringe into the Injection valve.
8	Disconnect the syringe and plug the **Syr** port with a Stop plug.

Fill the Superloop using the Sample pump

Follow the instruction below to fill the Superloop using the Sample pump.

NOTICE

Glass tube splinter. Make sure to set the sample pressure below the max pressure of the Superloop before executing a flow in the Manual instructions dialog box when the Superloop is connected.

Tip: *The Superloop can also be filled as part of a method run, as set in the **Sample Application** phase in the **Method Editor**. For multiple injections, it may be more convenient to fill the Superloop once, as described in the instruction below.*

Step	Action
1	In the ***Manual instructions*** dialog box: • Select ***Flow path:Injection valve***. • Select ***Sample pump load*** from the ***Position*** drop-down list. • Click ***Execute*** *Result:* The Injection valve switches to ***Sample pump load*** position.
2	Make sure that the sample inlet tubing from the sample vessel is connected to the Sample inlet valve.
3	In the ***Manual instructions*** dialog box: • Select ***Alarms:Alarm sample pressure***. • Set ***Mode*** as ***Enabled***. • Set a ***High alarm*** level that is below the maximum pressure of the Superloop. • Click ***Execute***

Step	Action
4	In the ***Manual instructions*** dialog box: • Select ***Pumps and pressures:Sample flow***. • Set ***Flow rate*** to an appropriate value for the Superloop size, in this example 10 ml/min. 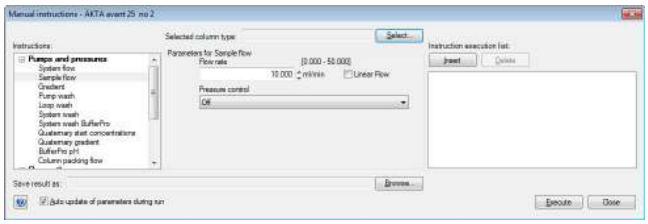 • Click ***Execute*** *Result:* A sample flow starts, in this example of 10 ml/min.
5	When the Superloop is filled with as much volume as is needed, click the ***End*** icon in the ***System Control*** toolbar to end the run.
6	Plug the **Syr** port on the Injection valve with a Stop plug.

5.7.3 Sample application using a sample loop

Introduction

A sample loop is recommended for injection of smaller sample volumes onto the column.

A sample loop can be connected to either the Injection valve or the Loop valve. When using the Loop valve, up to five loops can be connected simultaneously.

Note: *Sample loop is called capillary loop in UNICORN.*

How to fill a sample loop

Follow the instructions to fill the sample loop with sample.

Step	Action
1	Connect a suitable sample loop to Injection valve ports **LoopF** (fill) and **LoopE** (empty).
2	Fill a syringe with sample.
3	Connect the syringe to the Injection valve port **Syr**.

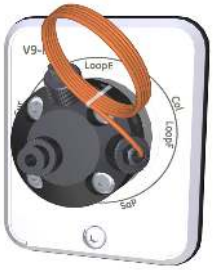

Step	Action
4	In the ***Process Picture***: • Click on the ***Injection valve*** and select ***Manual load***. 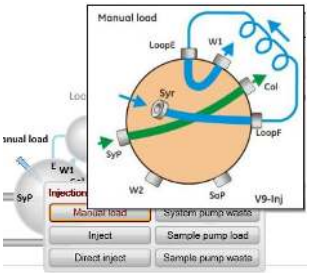 *Result:* Injection valve is set to manual load.
5	If the loop is connected to: • the Injection valve, continue to step 7. • the Loop valve, continue to step 6.
6	In the ***Process Picture***: • Click the ***Loop valve***. • Select the position the loop is connected to, for example ***Position 1***. 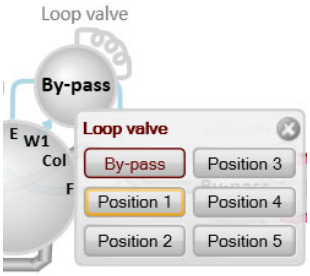 *Result:* The Loop valve switches to the selected position.
7	Load sample into the sample loop. To avoid sample loss due to siphoning, leave the syringe in the port until the sample has been injected onto the column during the run.

Tip: *It is recommended to overfill the loop to make sure that the loop is completely filled. Excess of sample will leave the valve through port **W1**.*

Tip: *By default a union Luer female to 1/16" male is used for connection of the sample syringe to the injection valve. For loading of smaller volumes with higher precision there is an alternative accessory, Fill port INV-907 (18-1127-66) or the complete kit Injection Valve Kit (18-1110-89).*

Fill the sample loop using the Sample pump

Most often the sample loop is filled using a syringe. However, to fill it using the sample pump, follow the instructions for filling the Superloop, see *Section 5.7.2 Sample application using a Superloop, on page 192*.

Note:

- *It is not necessary to set the Alarm Sample Pressure when filling a sample loop.*
- *It is recommended to overload the loop to make sure that the loop is completely filled.*
- *Set **Flow rate** to an appropriate value for the loop size.*
- *After loading, plug the **Syr** port on the Injection valve with a Stop plug.*

Empty the loop

General considerations

During the method run, the sample is automatically injected onto the column. The loop is emptied and washed out using buffer from the system pumps. The total buffer volume to be used for emptying and washing the loop is set in the Method Editor.

Using a sample loop connected to Loop valve V9-L or V9H-L

For maximum reproducibility, use complete loop fill when loading the loop, that is, overfill the loop with a sample volume of up to 3-5 times the volume of the loop. For minimum sample loss, use partial loop fill, that is, fill only up to 50% of the loop volume. Empty the loop with 3-5 times the volume of the loop.

Volume used to empty a loop connected to Loop valve V9-L or V9H-L

To minimize the risk for carry over and to make sure that the complete sample volume reaches the column, the loop should be emptied with an excess of buffer. The tubing between the Loop valve port **E** and the Injection valve port **LoopE** holds a small volume. If the loop is emptied with a volume equal to, or less than the loop volume this needs to be taken into account. It is also important to use a low flow rate to ensure that the correct volume is added to the column when injecting a small volume.

Note: *Partially emptying the loops that are attached to Loop valve V9-L or V9H-L can increase the risk for carry over from one loop position to the next.*

5.8 Fractionation

Introduction

The built-in fraction collector and the optional Fraction collector **F9-R** collect fractions from ÄKTA avant purification runs. The built-in fraction collector has integrated cooling. The fraction collectors are connected to ÄKTA avant and controlled by UNICORN. The fraction collectors can be automatically controlled in a method run or manually controlled.

In this section

This section contains the following subsections:

Section	See page
5.8.1 Prepare the built-in fraction collector	201
5.8.2 Prepare Fraction collector F9-R	207
5.8.3 Fractionation overview	215

5.8.1 Prepare the built-in fraction collector

Introduction

This section describes how to prepare the built-in fraction collector. For information regarding the types of deep well plates, tubes and cassettes, see *Section 3.10.3 Cassettes, cassette tray and racks, on page 87*.

WARNING

Fraction collector. Do **not** fractionate flammable liquids in the built-in fraction collector. When running RPC methods, collect fractions through the outlet valve or the optional external Fraction collector **F9-R**.

Prepare the built-in fraction collector

Before starting to prepare the built-in fraction collector, check the fractionation settings in the method to be run. Perform the steps described below according to the settings in the method.

- Insert the cassette tray or a rack for tubes or bottles.
- Change the ***System Settings*** in UNICORN to set the fractionation mode and other settings for fraction collection.

How to insert a tray or a rack is shown in the following topic.

For information on how to change the ***System Settings*** before a run, see UNICORN System Control Manual. The available ***System Settings*** are described in *Section 9.7.7 System settings - Fraction collection, on page 463*.

Prepare and insert the cassette tray

Follow the instructions to prepare the fraction collector before a run.

Cassettes and cassette tray

Step	Action
1	If you are to use cassettes with the QuickRelease function, first open the cassettes.

2	Place the tubes and deep well plates in the cassettes. Make sure that the deep well plates are rotated so that the well marked **A1** is positioned above the **A1** marking on the cassette.

Step	Action
3	Close the cassettes that have the QuickRelease function.

4	Place the cassettes on the cassette tray. Make sure that the cassette type code (see the illustration) faces the front of the tray marked with the GE monogram.

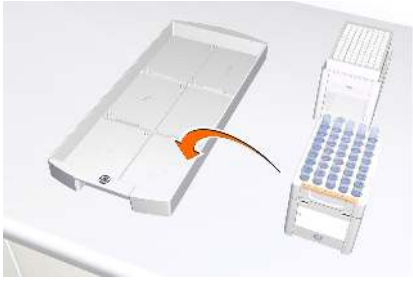

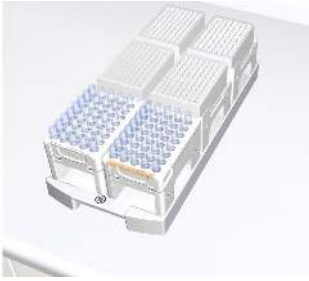

5	Open the fraction collector drawer by pressing the handle upwards, and pulling out the drawer.

Step	Action
6	Place the cassette tray on the tray support of the fraction collector drawer. Make sure that the front of the tray (marked with the GE monogram) faces the front of the drawer and is hooked onto the two pins.

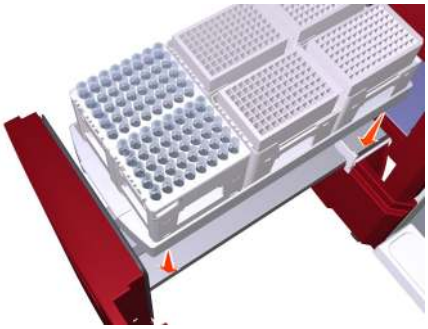

7	Close the drawer. Make sure that it snaps into closed position. *Result:* After the door has been closed, the fraction collector performs a Full scan of the cassette type code of each cassette to identify the cassette types, see *Cassette and tray identification, on page 205*.

Rack for 50 ml tubes and rack for 250 ml bottles

Step	Action
1	Place 50 ml tubes or 250 ml bottles in the corresponding rack.
2	Open the fraction collector drawer by pressing the handle upwards, and pulling out the drawer.

Step	Action
3	Place the rack on the tray support of the fraction collector drawer. Make sure that the front of the rack (marked with the GE monogram) faces the front of the drawer and is hooked onto the two pins.

Note:

The cassette tray shall not be used when the rack for 50 ml tubes or the rack for 250 ml bottles is placed in the fractionation collector drawer.

4	Close the drawer. Make sure that it snaps into closed position.

Cassette and tray identification

When the door of the fraction collector is closed automatic scanning is performed. There are two types of scanning procedures:

- ***Full scan***: Scanning of cassette type codes to determine which types of cassettes are used, and scanning of rows and columns in deep well plates to identify which types of plates are used (24, 48, or 96 wells). Full scan is performed only when the system is in state ***Ready***.
- ***Quick scan***: Scanning of cassette type codes to determine which type of cassettes are used. Quick scan is performed during the run to ensure that correct cassettes are placed in the fraction collector.

WARNING

Moving parts in fraction collector. Do not open the fraction collector drawer when the fraction collector is active. If you need to access the fraction collector, press ***Pause***, and make sure that the movement has stopped before opening the drawer.

View fraction collector content

To view the content of the Fraction collector, open the ***System control*** module. On the ***View*** menu, click ***Fraction Collector Content***.

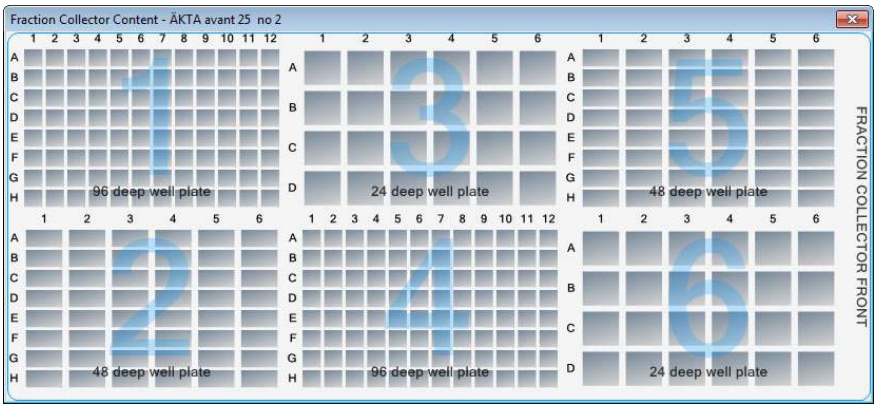

5.8.2 Prepare Fraction collector F9-R

Introduction

This subsection describes how to prepare and assemble Fraction collector F9-R before a run.

Fraction collector F9-R can be connected to ÄKTA avant and controlled by UNICORN. The fraction collector can be automatically controlled in a method run or manually controlled.

Prepare the fraction collector

Before starting to prepare the Fraction collector **F9-R**, check the fractionation settings in the method to be run. Perform the steps described below according to the settings in the method.

- Assemble the Tube rack
- Insert collection tubes
- Adjust the Delivery arm
- Update ***System Settings*** in UNICORN

Illustration of the tube rack

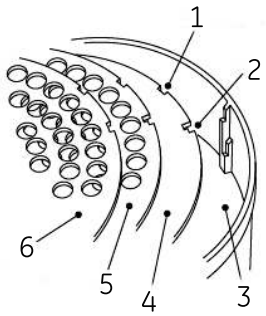

Part	Function
1	Single cutout
2	L-shaped cutout
3	Bowl
4	Tube support
5	Tube guide
6	Tube holder

Note: *Note that the tube guide has both single and L-shaped cutouts, while the tube holder only has single cutouts.*

Tube rack inserts

The Fraction collector F9-R is delivered with the 18 mm tube rack mounted. Each tube rack is made up of a combination of a bowl, tube support, tube guide and tube holder. Change the tube holder and the tube guide to collect fractions in 12 mm tubes or 30 mm tubes. The 12 mm tube rack is delivered with Fraction collector F9-R and the 30 mm tube rack is available as an accessory. The table below describes inserts and corresponding fraction collection tubes.

Inserts	Maximum number of tubes	Tube diameter	Tube length
12 mm Tube holder 12 mm Tube guide	175	12 mm	50 to 180 mm
18 mm Tube holder 18 mm Tube guide	95	18 mm	50 to 180 mm
30 mm Tube holder 30 mm Tube guide	40	30 mm	50 to 180 mm

Single and L-shaped cutouts

When assembling a tube rack, different cutouts are used for the various inserts depending on the length of the collection tubes. Which cutouts to use are summarized in the tables below.

12 mm and 18 mm tube rack inserts

Inserts	50 to 85 mm tubes	85 to 180 mm tubes
Tube support	L-shaped cutout	Not required
Tube guide	Single cutout	L-shaped cutout
Tube holder	Single cutout	Single cutout

30 mm tube rack inserts

Inserts	30 to 50 mm tubes [1]	50 to 85 mm tubes	85 to 180 mm tubes
Tube support	Single cutout	L-shaped cutout	Not required

Inserts	30 to 50 mm tubes [1]	50 to 85 mm tubes	85 to 180 mm tubes
Tube guide	Single cutout	Single cutout	L-shaped cutout
Tube holder	Single cutout	Single cutout	Single cutout

1 For 30 to 50 mm tubes, first insert the tube guide from the 18 mm rack using the single cutout, before inserting the tube support for the 30 mm rack.

Assembly instructions

Follow the instructions to assemble the tube rack.

Step	Action
1	Insert the tube support (4), if required, into the bowl (3). The circular marks on the tube support should face down.
2	Insert the tube guide (5) with the tube position numbers upwards. The tube guide should rest about 1 cm above the tube support.

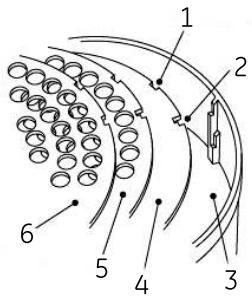

Note:

When assembling a tube rack, single cutouts (1) and L-shaped cutouts (2), are used for various inserts depending on the length of the collection tubes. See *Single and L-shaped cutouts, on page 208* *for detailed information.*

Step	Action
3	Insert the tube holder (6) with the tube position numbers upwards: Check that tube position 1 (7) is directly above tube position 1 (7) of the tube guide. 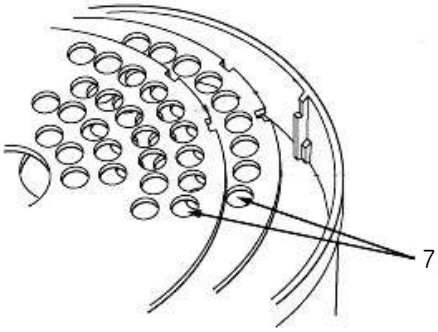
4	• Push the flexible bowl out at each rib and snap the tube holder under the top lip of the rib (8). 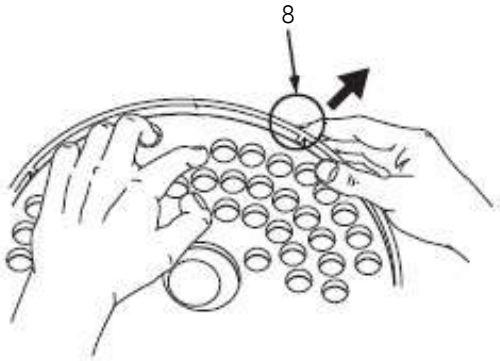 ***Note:*** *Do not force the tube holder into place as this may damage the lip.* • Check that the surface of the tube holder is level.
5	Gently move the delivery arm (10) out to the outer stop.

Step	Action
6	Place the tube rack (9) over the central spindle (11) and pull the spring loaded drive sleeve (12) out so the tube rack comes to rest.

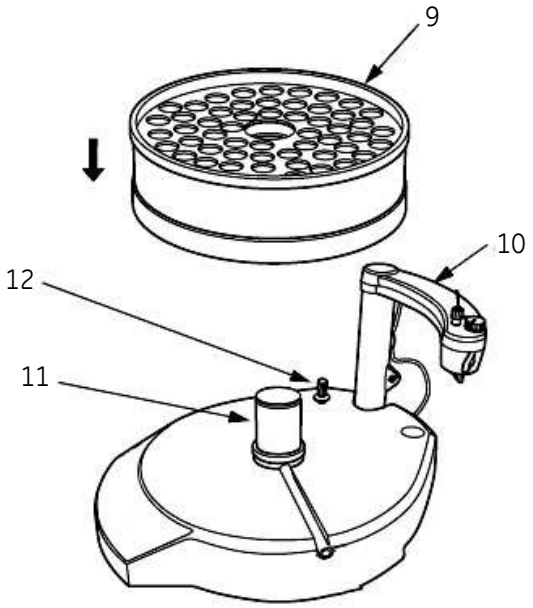

Insert collection tubes

Insert a sufficient number of collection tubes in to the tube rack, starting at position 1, pushing each one down as far as they will go. All the tubes must be of the same length and diameter and there should be no spaces in the sequence.

Adjust the delivery arm

Follow the instructions to adjust the height of the delivery arm.

NOTICE

Never lift Fraction collector **F9-R** by the delivery arm. This may damage the fraction collector.

Step	Action
1	Lift and then lower the delivery arm (1), and allow it to move in so the tube sensor (2) touches the collection tubes of the outer track.

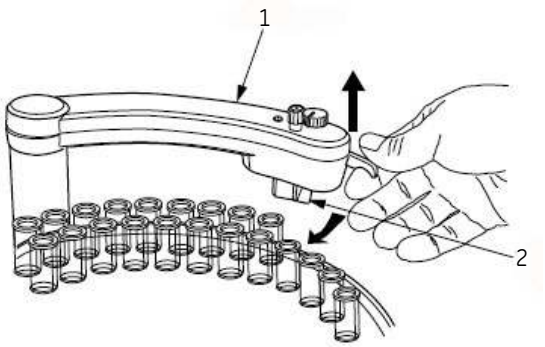

2	Loosen the lock knob (3)

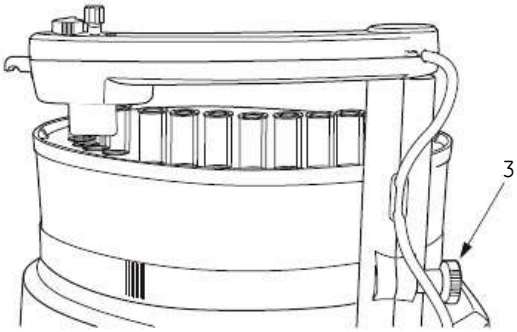

Step	Action
3	• Adjust the height so that the horizontal mark (5) on the tube sensor (6) is at the same level as the top of the flat collection tubes and approximately 2 mm over the top of the flanged collection tubes (4). 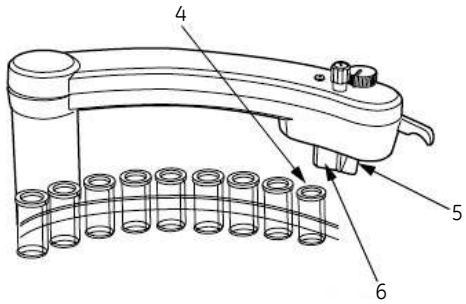 • Lock the delivery arm at this height with the lock knob.
4	Check that the tube sensor (9) is in the correct position for the tubes used (10). The eluent tubing (7) should be above the center of the collection tube. 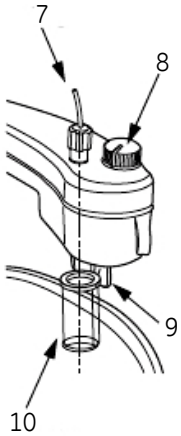
5	Use the sensor control (8) to position the tube holder over the center of the collection tube.

Connect tubing

Make sure that the tubing to the fraction collector is properly connected. See *Connect tubing to the ÄKTA avant instrument, on page 132*.

Sensor control

The sensor control can be switched between the two positions "small tubes" and "large tubes", indicated in the illustration below.

The position for large tubes is used for tubes of approximately 18 mm i.d. and larger. The position for small tubes is used for tubes smaller than 18 mm i.d. Note that this is a rough approximation. Always check that the eluent tubing is centered above the collection tube.

5.8.3 Fractionation overview

Fractionation types

The following table lists the types of fractionation that the fraction collectors can be used for.

Type	Description
Fixed volume fractionation	During fixed volume fractionation the fraction collector continuously switches tubes according to the set volume throughout the entire fractionation. This type of fractionation is also known as straight fractionation.
Peak fractionation	Peak fractionation can be used to further increase the purity of the collected protein peaks and minimize the number of tubes used. The monitor signal is used to determine when to switch the tubes. See *Section 9.7.8 System settings - Watch parameters, on page 466* for information about different watch options.
Combined fixed volume fractionation and peak fractionation	The two fractionation types listed above can be used in combination. Combination of fixed volume and peak fractionation allows fractions collected by fixed volume fractionation and fractions collected by peak fractionation to be directed to different collection tubes.

To be able to analyze different parts of the peak, the fraction size during elution is usually set to a value smaller than the expected peak volume.

Illustration

The following illustration show examples of fractionation using fixed volume fractionation and fractionation using peak fractionation.

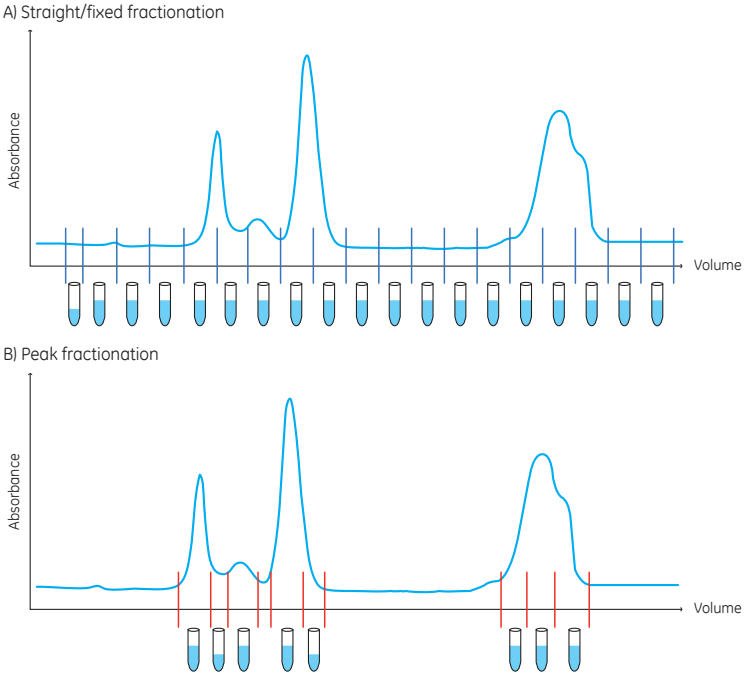

Delay volume

The delay volume settings are used to make sure that the fractions collected during fractionation, using the outlet valve or the fraction collector, correspond to the fractions indicated in the chromatogram. The delay volume is the volume between the UV monitor, and the fraction collector or outlet that is used, see the following illustration.

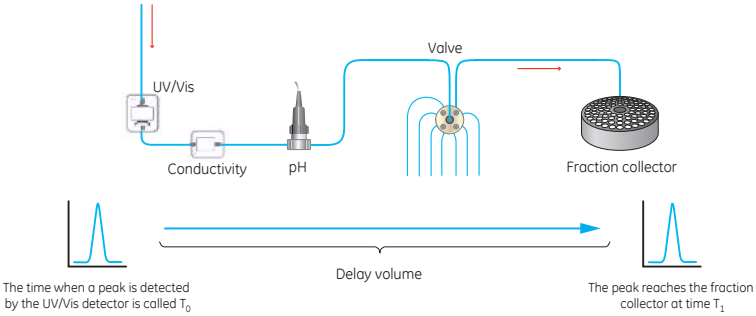

As the delay volume is affected by the length and diameter of the tubing, it should be set according to the tubing and modules used, see *Section 9.12 Delay volumes, on page 500*.

Illustration of fraction marking using fixed volume fractionation with Fraction collector F9-R

The illustration below shows the fractions collected, and the numerical marking of fractions, when fixed volume (straight) fractionation is used with Fraction collector **F9-R**.

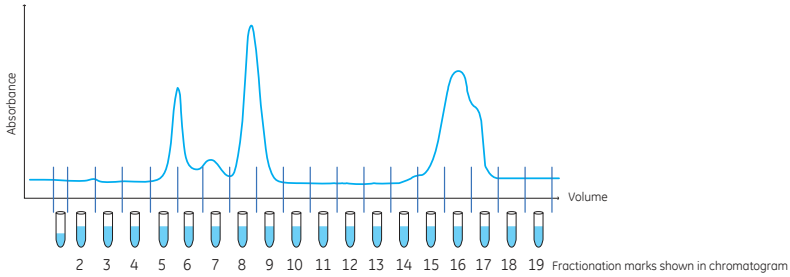

When fixed volume fractionation is used the delay volume is collected at the beginning of fractionation.

Fraction collector F9-R saves the delay volume in the first tube (fraction 1), see the previous example illustration. Delay volumes are not indicated with a numerical fraction mark on the chromatogram.

Note: *The built-in fraction collector does not save the delay volume, instead the delay volume is disposed of in the waste funnel.*

Note: *The fractions collected by Fraction collector **F9-R**, are indicated by the prefix 2: (i.e. fractions, **2:2**, **2:3** etc.).*

Illustration of fractions and fraction marking using peak fractionation with Fraction collector F9-R

The following illustration shows the fractions collected, and the numerical marking of fractions, when peak fractionation is used with Fraction collector F9-R.

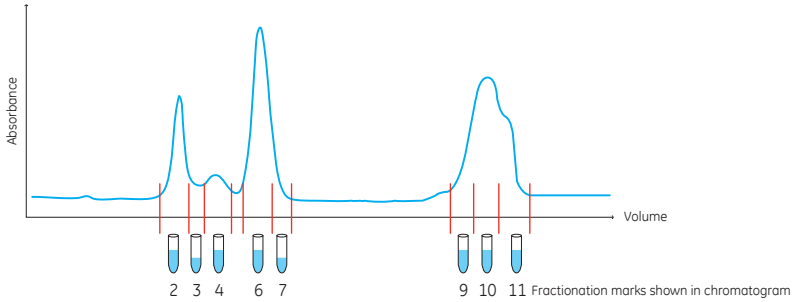

When peak fractionation is used, Fraction collector F9-R collects the delay volumes in the fractions preceeding each peak. In the chromatogram above, delay volumes are collected in tubes corresponding to fraction 1, 5 and 8. The numerical fraction marks for the delay volume fractions are not indicated on the chromatogram.

Note: *The built-in fraction collector does not save the delay volume, instead the delay volume is disposed of in the waste funnel.*

Note: *The fractions collected by Fraction collector **F9-R**, are indicated by the prefix 2: (i.e. fractions, **2:2**, **2:3** etc.).*

Fractionation modes for built-in fraction collector

There are three fractionation modes for the built-in Fraction collector, ***Automatic***, ***Accumulator*** and ***DropSync***. Spillage between collection vessels during a run is avoided with all three fractionation modes.

- ***Automatic***: The fraction collector uses the DropSync mode for flow rates up to 2 ml/min and automatically switches to Accumulator mode for higher flow rates.
- ***Accumulator***: Liquid is collected during movement between tubes or wells. The liquid is then dispensed in the next well or tube. Fractionation with accumulator can be used at all flow rates.
- ***DropSync***: When using DropSync , the sensors in the Dispenser head detect when a drop is released from the nozzle. The dispenser head moves to the next well or tube just after a drop is released. Fractionation with DropSync can be used at flow rates up to 2 ml/min. Solutions with low surface tension may require a lower flow.

Fractionation settings for Fraction collector F9-R

There are two fractionation settings for Fraction collector **F9-R**, ***DropSync off*** or ***DropSync on*** .

Dropsync off: No synchronization of collection.

DropSync on: When using ***DropSync*** the sensors in the tube sensor detect when a drop is released. The tube rack moves and positions the next tube under the tube sensor just after a drop is released. Fractionation with ***DropSync*** can be used at flow rates up to 2 ml/min. For water and solutions with higher surface tension, a higher flow rate can be used. Volatile solutions and solutions with low surface tension may require a lower flow.

Missing tubes or plates in built-in fraction collector

When automatic cassette configuration is selected in the system settings the fraction collector automatically detects which types of cassettes and plates that are present. The fraction collector will however not detect if tubes or bottles are missing in the cassettes. Make sure that the cassettes to be used are occupied by appropriate types and numbers of tubes or bottles before starting a run.

It is not possible to change the cassette configuration during a run. When the system state is set to ***Pause*** it is possible to take out cassettes or plates from the fraction collector only if they are replaced by cassettes or plates of the same type and are placed in the same positions.

The action of the system when the last tube in the fraction collector is filled is set in the instruction ***Last tube filled*** in the system settings. The flow can be directed to waste or to any of the outlets or the run can be paused. If the action is set to ***Pause***, the system automatically pauses when the last tube is filled and prompts the user to replace the filled tubes.

Missing tubes in Fraction collector F9-R

If a tube is missing, Fraction collector **F9-R** will continue the fractionation on the tube row located closer to the center of the fraction collector. The fractionation marks in the chromatogram will then not reflect the tubes in which the sample is collected.

If the fraction collector runs out of tubes, the delivery arm moves to the fraction collector center position while ÄKTA avant pauses and displays an error message.

Peak broadening

The width of peaks at the fraction collector is influenced by the properties of the column and the dimensions of tubing connecting the components and the components themselves. Initial sample volume affects the peak width in gel filtration (GF) chromatography. A sample zone is broadened during passage through a GF column so that the sample is diluted and the resolution decreases with increasing sample volume. Sample volume does not however affect the resolution in adsorption chromatography techniques such as affinity chromatography (AC), ion exchange chromatography (IEX), and hydrophobic interaction chromatography (HIC). The effect of peak broadening in the system from sample injection to peak detection (including dilution on the column) is apparent in the chromatogram from the UV monitor, but broadening from the UV monitor to fraction collection is not visible in the chromatogram. With small analytical columns the peak broadening between the UV monitor and the fraction collector will be obvious.

5.9 Create a method and perform a run

About this section

This section provides an overview of how to create a method in UNICORN and how to perform manual and method runs on ÄKTA avant.

It also contains advice on things to be considered during and after a run.

In this section

This section contains the following subsections.

Section	See page
5.9.1 Create a method	223
5.9.2 Perform a run	227
5.9.3 Monitor the run	230
5.9.4 After run procedures	233

5.9.1 Create a method

Introduction

The predefined methods are built up using phases, where each phase corresponds to a step in a chromatography run with a number of properties associated with that phase.

See UNICORN Method Manual for more information about method structure, definitions and concepts of methods in UNICORN.

Note: *UNICORN methods are always created specifically for a designated system and thus also for a specific system type. However, it is often useful to convert a method that was originally created for a system of one type, for use with a system of another type. For example it is possible to convert a method created for ÄKTA avant 25 to ÄKTA avant 150. See UNICORN Method Manual.*

Predefined methods

There are several predefined methods to choose from. All the predefined methods are listed in the following topics.

The predefined methods available for each system are defined by the Instrument Configuration. See *Section 9.6 Predefined methods and phases, on page 444* for more information about each method.

Purification methods

- Affinity Chromatography (AC)
- Anion Exchange Chromatography (AIEX)
- Cation Exchange Chromatography (CIEX)
- Chromatofocusing (CF)
- Desalting
- Gel filtration (GF)
- Hydrophobic Interaction Chromatography (HIC)
- Manual Loop Fill
- Reversed Phase Chromatography (RPC)

Maintenance methods

- Column CIP
- Column Performance Test
- Column Preparation

- Intelligent Packing (ÄKTA avant 150 only)
- System CIP
- System Preparation

Main steps when defining a new method

The main steps when defining a method are:

1 Create/open a method
   - Create a ***Predefined*** method (including a set of phases that may be edited)

     or
   - Open an existing method that can be edited and saved with a new name or overwritten
2 Build/edit the ***Method Outline*** and/or edit the ***Phase Properties*** for the appropriate phases
3 Save the method

Create a new method

Follow the instructions to create a chromatographic method based on a predefined method.

Step	Action
1	Open the ***Method Editor*** module and click the ***New Method*** button. *Result:* The ***New Method*** dialog box opens.

Step	Action
2	In the ***System*** list, select your system. Click ***Predefined Method*** and in the ***Predefined Method*** list select your predefined method. Click ***OK***. *Result:* The phases included in the chosen method is shown in the ***Method Outline*** pane, and the default settings for each of the phases is shown in the ***Phase Properties*** pane.

See UNICORN Method Manual for more information about methods and method creation in UNICORN.

Note: *Sample loop is called capillary loop in UNICORN.*

Text Instruction mode

In most cases methods can be edited using the ***Phase Properties*** pane in the ***Method Editor*** module. However, modules without a recommended position are not supported by ***Phase Properties*** and have to be edited in the ***Text Instruction*** mode.

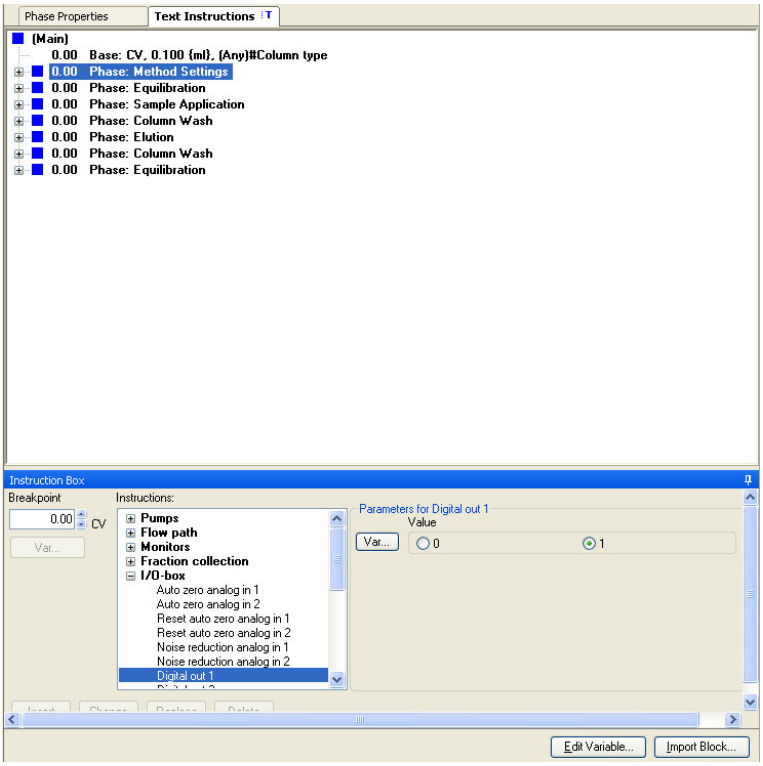

The following modules require that the method is created using the ***Text Instruction*** mode:

- Inlet valve IX

  Note: *It is necessary to use instructions for both Inlet valve IX (**V9-IX** or **V9H-IX**) and the other inlet valve.*

- Versatile valve **V9-V** or **V9H-V**
- I/O-box **E9**
- UV monitor **U9-L**, 2nd

  Note: *The UV monitor **U9-L**, 2nd is auto zeroed at the same time as UV monitor **U9-M** in predefined methods. All other UV monitor **U9-L**, 2nd instructions need to be edited in the **Text Instruction** mode.*

5.9.2 Perform a run

Checklist

Make sure that the system is correctly prepared. Check that:

- The system is prepared according to *Section 5.1 Before you prepare the system, on page 154*.
- A suitable column has been selected for the application. Consider target protein and pressure range.
- The buffer inlet tubing is immersed in correct buffer vessels. Consider solution identity and volume.

  Note: *Inlet **A1** and **B1** must always be immersed in buffer or water. When the System pumps are synchronized, the Inlet valves are positioned to **A1** and **B1** for a short moment. If the Sample pump is to be used, inlet **Buff** must be immersed in buffer or water.*

- The waste tubing is immersed into appropriate waste vessels. Consider vessel size and vessel material.
- No tubing is twisted and the flow path is free from leakage.
- Check the pump piston rinsing system. Check that liquid is coming out of the outlet tubing and that each tube contains at least 25 ml. If not, add liquid. Evaporation can decrease volumes. To fill and prime the system, see *Section 7.3.1 Change pump rinsing solution, on page 270*.

CAUTION

Close doors. To minimize the risk of exposure to hazardous chemicals and pressurized liquids, always close the foldable door and the pump cover before starting a run.

WARNING

High pressure. The product operates under high pressure. Wear protective glasses and other required Personal Protective Equipment (PPE) at all times.

Choose and start a method

The following instruction describes how to open a method and start a run.

Step	Action
1	Open the ***System Control*** module and click the ***Open Method Navigator*** button. *Result:* The ***Method Navigator*** pane opens. 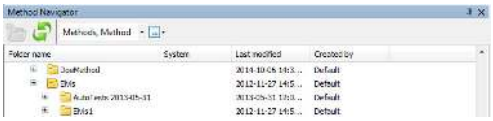
2	Select the method to run, and click the ***Run*** button. *Result:* The ***Start Protocol*** dialog box opens.
3	Step through the displayed pages in the ***Start Protocol***, add requested input and make appropriate changes if necessary. Click ***Next***.
4	Click ***Start*** on the last page of the ***Start Protocol***. *Result*: • If column logging was chosen during installation of UNICORN and a column type was selected when the method was created, the ***Select Columns*** dialog box opens. For further information on column handling, please refer to UNICORN Method Manual and UNICORN System Control Manual. • If column logging was *not* chosen during installation of UNICORN and/or *no* column type was selected when the method was created, the run starts directly.

Perform a manual run

Manual runs can be convenient for procedures such as filling tubing with buffer or packing a column with media.

Step	Action
1	On the ***Manual*** menu, click ***Execute Manual Instructions***.
2	Select instruction group and instruction.
3	Select or enter parameter values.

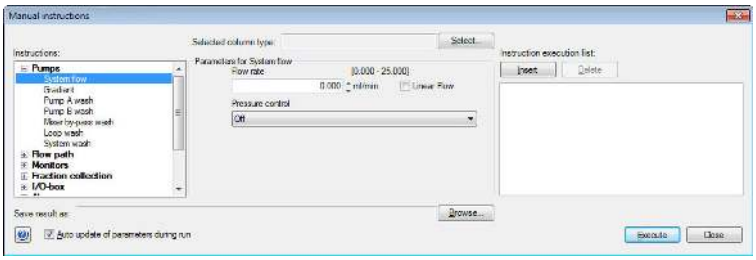

4	Click ***Insert*** to have several instructions performed at the same breakpoint. ***Note:*** *Manual runs are only stored temporarily. However, you can choose to store them permanently in a selected directory. To save results in a chosen directory, click **Browse** before the run is started.* ***Note:*** *If a method run is started during a manual run, the results from the manual run are not stored.*
5	To perform the instructions, click ***Execute***.

Tip: *Manual runs can also be controlled from the **Process Picture**.*

5.9.3 Monitor the run

Introduction

You may follow the on-going method run in the ***System Control*** module. The current system status is shown in the ***System state*** panel in the ***Run Data*** pane. For example, it may state ***Run***, ***Wash*** or ***Hold***. The same information is also shown in the instrument display.

- Selected curves are shown in the ***Chromatogram*** pane.
- All registered actions during the run are displayed in the ***Run Log*** pane.
- The current flow path is shown in the ***Process Picture*** pane.

For details on the ***System Control*** interface, see UNICORN System Control Manual.

Monitor the run

To interrupt a method during a run you may click the ***Hold***, ***Pause*** or ***End*** buttons in ***System Control***. A held or paused method run can be resumed by clicking the ***Continue*** button. See the following table.

If you want to...	then...
temporarily hold the method, with current flow rate and valve positions sustained	click the button.
temporarily pause the method, and stop all pumps	click the button.
resume, for example, a held or paused method run.	click the button. ***Note:*** *An ended method cannot be resumed.*
permanently end the run	click the button.

Note: *When ending a method run in advance, it is possible to save the partial result.*

Process Picture

The ***Process Picture*** displays the current flow path, run parameters and real-time data from monitors during a run. It also allows manual interactions with the system.

Tubing colors indicate flow path states, as shown in the following illustration and described in the following table.

Modules without a fixed place in the system are shown in a panel below the process picture (modules are called components in the process picture).

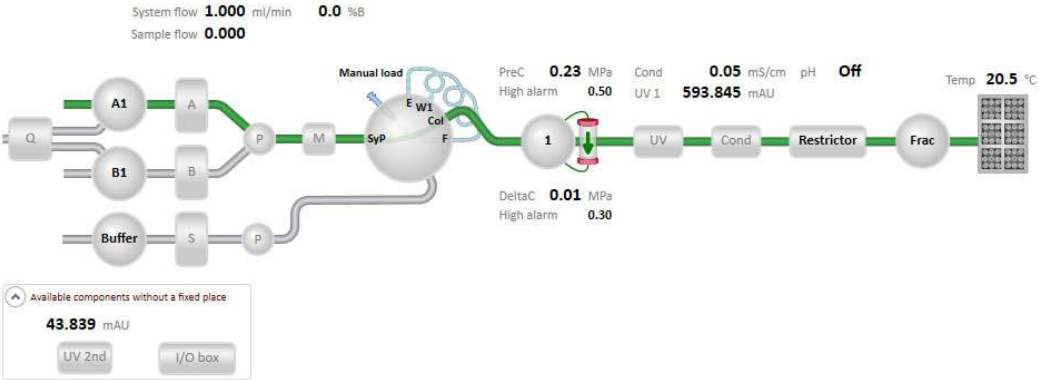

Color	Indication
Green	Open flow path with flow.
Grey	Closed flow path or an open path without flow.
Blue	Syringe port in loop open for manual injection.

Actions in the Process Picture pane

It is possible to interact with the ***Process Picture*** pane.

- To open a related instruction, click the component icon. The example below shows the pop-up toolbar for the ***Injection valve*** icon. Instructions can be given from the pop-up toolbar of each component icon.

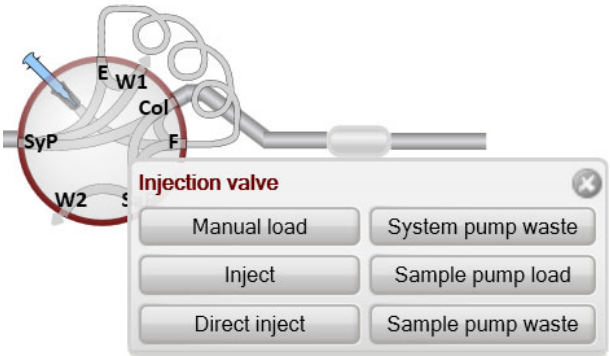

- To display a detailed picture with explanations, for example for a valve, right-click the component icon and click ***Detailed picture***.

5.9.4 After run procedures

Introduction

This section describes how to clean the instrument and columns after a chromatographic run, and how to prepare the system for storage.

The instrument and the columns should be cleaned between the runs. This will prevent, for example, sample contamination, protein precipitation and column clogging. If the instrument is not going to be used for a couple of days or longer, the instrument, columns and the pH flow cell should be filled with storage solution. For further information about cleaning and maintenance procedures, see *Chapter 7 Maintenance, on page 259*.

Tip: *To clean and fill the instrument and columns with storage solution, use the* ***System CIP*** *and* ***Column CIP*** *methods. Either as separate, predefined methods or as phases included in a chromatographic method.*

WARNING

Corrosive chemicals during maintenance. If the system or column is cleaned with a strong base or acid, flush with water afterwards and wash with a weak neutral buffer solution in the last step or phase.

System cleaning

After a method run is completed, perform the following:

- Rinse the instrument with one or several cleaning solution(s) (e.g., NaOH, buffer solution or distilled water) using the ***System CIP*** method.
- If applicable, empty the fraction collector.
- Clean all spills on the instrument and on the bench using a moist tissue.
- Empty the waste vessel.
- Clean the manual injection port of the injection valve, see *Clean the manual injection port of the injection valve, on page 291* for detailed instructions.
- If applicable, clean the pH electrode manually and make sure to leave it in an appropriate buffer. See *Section 7.6.6 Storage of the pH electrode, on page 302* for detailed instructions.

System storage

If the instrument is not going to be used for a couple of days or longer, also perform the following:

- Fill the system and inlets with storage solution (e.g., 20% ethanol) using the ***System CIP*** method.

Column cleaning

After a method run is completed, perform the following:

- Clean the column with one or several cleaning solution(s) using the ***Column CIP*** method.

Column storage

If the column is not going to be used for a couple of days or longer, also perform the following:

- Fill the column with storage solution (e.g., 20% ethanol) using the ***Column CIP*** method.

pH electrode storage

If pH monitoring will not be used for a week or longer, perform one of the following actions:

- Inject new storage solution into the pH flow cell.
- Replace the pH electrode with the dummy electrode that is installed in the pH valve on delivery.

In the following situations, in order to increase the lifetime of the pH electrode, use the ***By-pass*** position and store the electrode in storage solution inside the pH flow cell:

- pH monitoring is not needed during the run.
- Organic solutions are used.
- Extremely acidic or extremely basic solutions are used.

For further information on how to prepare the pH electrode for storage, refer to *Section 7.6.6 Storage of the pH electrode, on page 302*.

Log off or exit UNICORN

Follow the instructions to log off or exit UNICORN. This can be performed from any of the UNICORN modules.

If you want to...	then...
log off UNICORN	on the ***File*** menu, click ***Log off***. 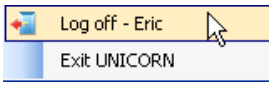 *Result*: All open UNICORN modules close and the ***Log On*** dialog box opens.
exit UNICORN	on the ***File*** menu, click ***Exit UNICORN***. 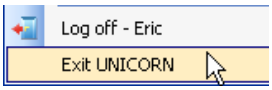 *Result*: All open UNICORN modules close.

Note: *If an edited method or result is open and not saved when you try to exit or log off UNICORN, you will see a warning. Click **Yes** to save, **No** to exit without saving, or **Cancel** to stay logged on.*

Shut down the instrument

Switch off the instrument by pressing the **Power** switch to the **O** position.

6 Performance tests

About this chapter

Performance tests should be run after installation to check the function of the ÄKTA avant system. Performance tests can also be used at any time to check the condition of the system, for example, after a prolonged stop. This chapter describes how to prepare, run, and evaluate the available performance tests.

In this chapter

This chapter contains the following sections:

Section	See page
6.1 General performance test actions	237
6.2 Air sensor tests	240
6.3 Built-in Fraction collector test	242
6.4 Fraction collector F9-R test	247
6.5 Quaternary valve test	250
6.6 System test	253
6.7 UV monitor U9-L test	257

6.1 General performance test actions

Introduction

Some actions are identical for all performance tests. These actions are described in this section.

Start the performance tests

Follow the instructions to start a performance test.

Step	Action
1	In the ***System Control*** module, on the ***System*** menu, click ***Performance Test and Report***. *Result:* The ***System Performance Test and Report*** dialog box opens.
2	In the ***System Performance Test and Report*** dialog box, click one of the following tests: **Test** ***Air sensors test*** ***Fraction Collector test, Built in frac*** ***Fraction Collector test, F9-R*** ***Quaternary valve test*** ***System test*** ***UV test, U9-L***
3	Click ***Run Performance Method***. *Result:* The ***Start Protocol*** of the selected test opens.
4	Click ***Next*** in the ***Start Protocol*** dialog box to open the next dialog box. The dialog boxes are described in the table *Overview of the Start Protocol dialog, on page 238*.
5	In the last dialog box of the ***Start Protocol***:***Result name and location***, click ***Start***. *Result:* The selected test starts.

Overview of the Start Protocol dialog

The following table describes the pages of the Start Protocol.

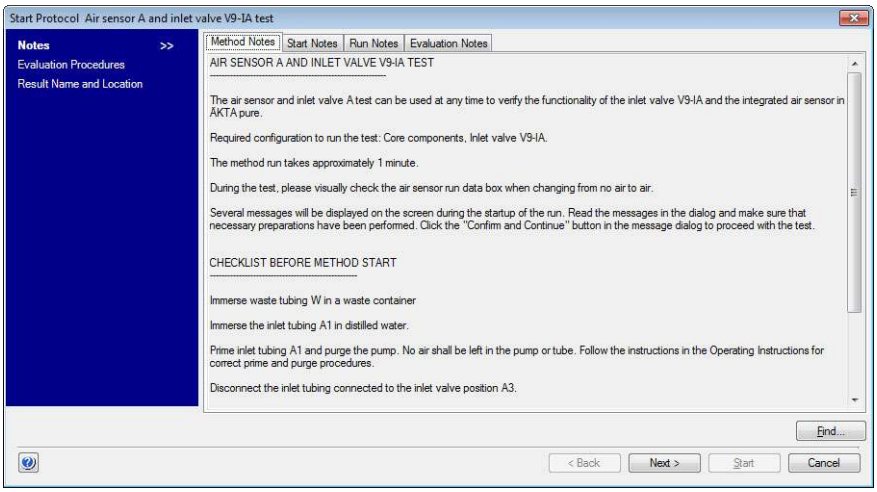

Page	Description
Notes	Displays the ***Method Notes*** of the method. The ***Method Notes*** contains a method description and instructions on how to run the method. This dialog box also allows the user to enter ***Start Notes***.
Evaluation Procedures	Allows the user to select to save the report to file (recommended) and/or to print the report.
Result Name and Location	Allows the user to change result name and result location.

During the run

A ***Message*** dialog box opens during the run. Read the messages in the dialog, and make sure that necessary preparations have been performed.

- Click ***Confirm and Continue*** in the ***Message*** dialog box to change system state from ***System Pause*** to ***Run*** and proceed with the test.
- Alternatively, click ***Confirm*** in the ***Message*** dialog box and click the ***Continue*** button on the Instrument display.

Automatic evaluation

The system automatically generates a report when the test is finished. The report can be printed in two ways:

- It is recommended to select ***Save the report to file*** in the ***Evaluation Procedures*** page of the ***Start Protocol*** dialog box when starting the test. The report is saved in the folder `Temp` in your UNICORN installation folder. For example `C:\Program Files\GE Healthcare\UNICORN\UNICORN 7.0\Temp`.
- If the option ***Print report*** was selected in the ***Evaluation Procedures*** page of the ***Start Protocol*** dialog box when starting the test, the report is also automatically printed on the system printer. Refer to UNICORN Administration and Technical Manual for information on how to install a printer.

Print the report and check the status of the tests. For each of the tests the report states "`The test passed`" or "`The test failed`".

Note: *The fraction collector test is evaluated manually and no report is generated.*

6.2 Air sensor tests

Method description

The Air sensors A, B, and S are integrated in Inlet valve A, Inlet valve B, and Sample inlet valve. The Air sensors test checks if the air sensors detect air. The method run takes approximately 5 minutes.

Required material

The following material is required:

- Syringe, 25 ml
- Distilled water

Prepare the Air sensors test

Follow the instruction to prepare the system before method start.

Step	Action
1	Immerse the pieces of inlet tubing marked **A1**, **B1**, and the piece of sample inlet tubing marked **Buff** in distilled water.
2	Prime the inlets **A1**, **B1**, and the sample inlet **Buff**, and purge the pumps. See *Section 5.4.1 Prime buffer inlets and purge system pumps, on page 164* and *Section 5.4.2 Prime sample inlets and purge Sample Pump, on page 171*.
3	Disconnect the inlet tubing connected to the inlet valve positions **A4**, **B4** and **S4**. During the test method air is introduced into the inlet valves through these inlet ports to test the function of the air sensors.

Run and evaluate the test

Follow the instructions described in *Section 6.1 General performance test actions, on page 237* to start, run and automatically evaluate the performance test.

Possible causes of a failed test

The following table describes possible causes of a failed test. When possible sources of error have been checked and taken care of, run the test once again.

Cause	Action
Faulty air sensor	For further information, see *Inlet valves, on page 379*.
Incorrect preparation of tubing	Make sure that the tubing was correctly prepared, see *Prepare the Air sensors test, on page 240*.

6.3 Built-in Fraction collector test

Method description

The Fraction collector test checks the functionality of the Fraction collector. For ÄKTA avant 25, fractionation of 2 ml is performed in three sequential wells in each of two 96 deep well plates. For ÄKTA avant 150, fractionation of 20 ml is performed in three sequential tubes placed in each of two Cassettes for 50 ml tubes.

The method run takes approximately 10 minutes.

Note: *The fraction collector test is evaluated manually and no report is generated.*

Required material

The following materials are required:

- Distilled water
- Syringe, 25 to 30 ml
- For ÄKTA avant 25:
  - Two Cassettes for deep well plates
  - Two 96 deep well plates
- For ÄKTA avant 150:
  - Two Racks for 50 ml tubes
  - Twelve 50 ml tubes

Prepare the Fraction collector test

Follow the instruction to prepare the system before method start.

Step	Action
1	Immerse the piece of inlet tubing marked A1 in distilled water.
2	Prime inlet **A1** and purge System pump A. See *Section 5.4.1 Prime buffer inlets and purge system pumps, on page 164*.
3	Place the deep well plates or tubes in the Cassettes. Make sure that the deep well plates are rotated so that the well marked **A1** is positioned above the **A1** marking on the Cassette.

Step	Action
4	Place the Cassettes on the Cassette tray, one on Cassette position 1 and one on Cassette position 6. Make sure that the Cassette type codes (see illustration below) faces the front of the tray marked with the GE logo. No other Cassetes must be present in the Fraction collector during the run. 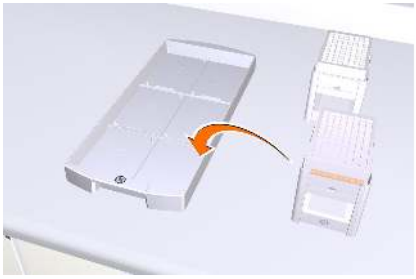 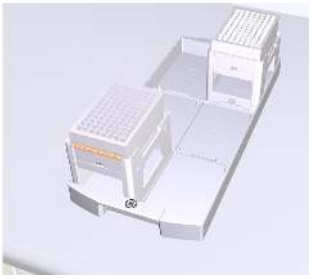
5	Open the Frac drawer by pressing the handle upwards, and pulling out the drawer.

Step	Action
6	Place the Cassette tray on the Tray support of the Frac drawer. Make sure that the front of the tray (marked with the GE logo) faces the front of the drawer. 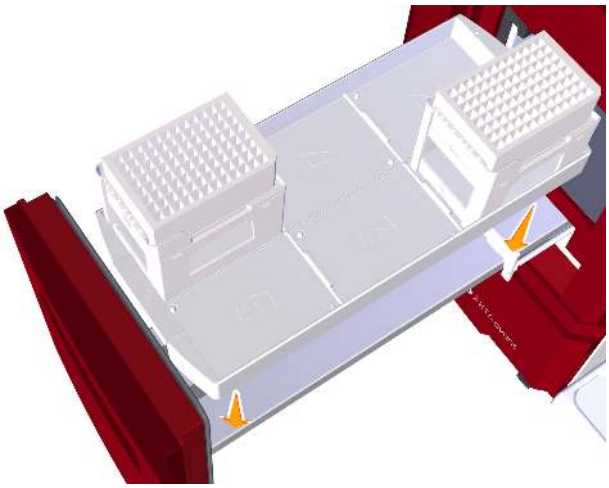
7	Close the Frac drawer. Make sure that it snaps into closed position.
8	In the ***System Control*** module, on the ***View*** menu, click ***Fraction collection content***. In the ***Fraction collector content*** dialog box, check that the automatic scanning procedures have been performed to show correct tube and cassette positions.
9	In the ***System Control*** module, on the ***System***menu, click ***Settings***. *Result:* The ***System Settings*** dialog box opens.
10	In the ***System Settings*** dialog box: • Select ***Fraction collector:Fractionation settings***. • For ÄKTA avant 25: In the ***Fractionation mode*** drop-down list, click ***Accumulator***. • In the ***Fractionation order*** drop-down list, click ***Row-by-row***. • Click ***OK***.

Run the test

Follow the instructions described in *Section 6.1 General performance test actions, on page 237* to start and run the performance test.

During the test run

Visually check that the fraction collector wash is performed.

Evaluate the test

To evaluate the result, do the following:

- Check that the fractionation marks in the chromatogram correspond to the filled wells and tubes and that there is minimal spillage. For further information on delay volumes and fractionation marks, see *Delay volume, on page 217*.

ÄKTA avant 25

- Check that correct volumes, 2 ml per well, are collected in wells **1A1** to **1A4** and **6A1** to **6A4**.

ÄKTA avant 150

- Check that correct volumes, 20 ml per tube, are collected in tubes **1A1** to **1A4** and **6A1** to **6A4**.

Possible causes of a failed test

The following table describes possible causes of a failed test. When possible sources of error have been checked and taken care of, run the test once again.

Cause	Action
Wrong volumes collected in the wells or tubes, and disturbances on the system pressure curves: - Air trapped in System pump A - Faulty System pump A	Air in pumps: Make sure to prime inlet tubing **A1** and purge System pump A before method start, see *Section 5.4.1 Prime buffer inlets and purge system pumps, on page 164*. Faulty pump: See *Section 8.6 Troubleshooting: Pumps, on page 394*.
Liquid is collected in the wrong wells or tubes: - Incorrect fractionation settings	Check the fractionation settings in the ***System Settings*** dialog box.
Liquid is collected in wrong Cassette: - Incorrect preparation of the Fraction collector	Make sure that only two Cassettes are placed on the Cassette tray, and that the Cassettes are positioned on the cassette positions 1 and 6.
Fractionation interrupted: - Impurities on the Dispenser head of the Fraction collector	Clean the Fraction collector. See *Section 7.6.4 Clean built-in fraction collector, on page 298*.
Incorrect preparation of buffer and tubing	Make sure that the system was correctly prepared, see *Prepare the Fraction collector test, on page 242*.

6.4 Fraction collector F9-R test

Method description

The Fraction collector F9-R test checks the functionality of **Fraction collector F9-R**.

The method run takes approximately 3 minutes.

Note: *The fraction collector test is evaluated manually and no report is generated.*

Required configuration

A correctly installed Outlet valve, and a correctly installed **Fraction collector F9-R** are required to run the test.

Required material

The following materials are required:

- Distilled water
- Syringe, 25 to 30 ml
- 7 tubes, 2 ml or larger, for collecting the fractions.

Prepare the Fraction collector F9-R test

Follow the instructions to prepare the system before method start.

Step	Action
1	Make sure that the Fraction collector F9-R is connected to port **Out 10** on Outlet valve **V9-O** or **V9H-O**
2	Direct outlet tubing **W** to a waste container.
3	Place inlet tubing **A1** into distilled water.
4	Prime inlet **A1** and purge System pump A. See *Section 5.4.1 Prime buffer inlets and purge system pumps, on page 164*.
5	Place 7 tubes in the Fraction collector, in positions 1 to 7.
6	In the ***System Control*** module, on the ***System*** menu, click **Settings** *Result:* The ***System Settings*** dialog box opens.

Step	Action
7	In the ***System Settings*** dialog box: • Select ***Fraction collection:Fractionation settings frac 2***. • In the ***Drop sync*** field, click ***On***. • Click ***OK***.

Run and evaluate the test

Follow the instructions described in *Section 6.1 General performance test actions, on page 237* to start and run the performance test. See the following topic for instructions on how to evaluate the fraction collector test.

Evaluate the result

Check that the correct volumes have been collected in the tubes. The tubes should contain the following:

- Tube **1**: The delay volume
- Tube **2**, **3** and **4**: 2 ml
- Tube **5** and **6**: 1 ml

Also, check that the fractionation marks in the chromatogram correspond to the filled tubes and that spillage is kept to a minimum.

For further information on delay volumes and fractionation marks, see *Delay volume, on page 217*.

Possible causes of a failed test

The table below describes possible causes of a failed test. When possible sources of error have been checked and corrected, repeat the test.

Cause	Action
Incorrect volumes collected in the tubes, and disturbances of system pressure curves: • Air trapped in System pump A • Faulty System pump A	Air in pumps: Make sure to prime inlet tubing **A1** and purge System pump A before method start, see *Section 5.4.1 Prime buffer inlets and purge system pumps, on page 164*. Faulty pump: See *Section 8.6 Troubleshooting: Pumps, on page 394*.
Liquid collected in wrong tubes:	Make sure the fraction collector delivery arm is positioned above tube number **1** before starting the test.
Incorrect preparation of buffer and tubing	Make sure that the system was correctly prepared, see *Prepare the Fraction collector F9-R test, on page 247*.

6.5 Quaternary valve test

Method description

The Q valve test checks the functionality of the Quaternary valve. Correct gradient formation is tested by producing a series of gradient steps. The method run takes approximately 30 minutes for ÄKTA avant 25 and 70 minutes for ÄKTA avant 150.

Required material

The following material is required:

- 1% acetone in distilled water
- Distilled water
- Capillary loop **Ref 1**
- Syringe, 25 to 30 ml
- For ÄKTA avant 25: Mixer, 1.4 ml
- For ÄKTA avant 150: Mixer, 5 ml

Prepare the Q valve test

Follow the instructions to prepare the system before method start.

Step	Action
1	Immerse the pieces of inlet tubing marked **Q1** and **Q3** in 1% acetone in distilled water.
2	Immerse the pieces of inlet tubing marked **Q2** and **Q4** in distilled water.
3	Connect the capillary loop marked **Ref 1** between Column valve ports **1A** and **1B** to generate a back pressure.
4	For ÄKTA avant 25: Make sure that the Mixer with a chamber volume of 1.4 ml is installed. For ÄKTA avant 150: Make sure that the Mixer with a chamber volume of 5 ml is installed. For information on how to change Mixer, see *Section 7.8.2 Replace the Mixer, on page 335*.
5	Prime all Q inlets and purge the System pumps. See *Section 5.4.3 Prime Q inlets, on page 176*.

Run and evaluate the test

Follow the instructions described in *Section 6.1 General performance test actions, on page 237* to start, run and automatically evaluate the performance test.

Illustration of chromatogram

The illustration below shows a chromatogram from a Quaternary valve test. The gradient steps are marked in the illustration.

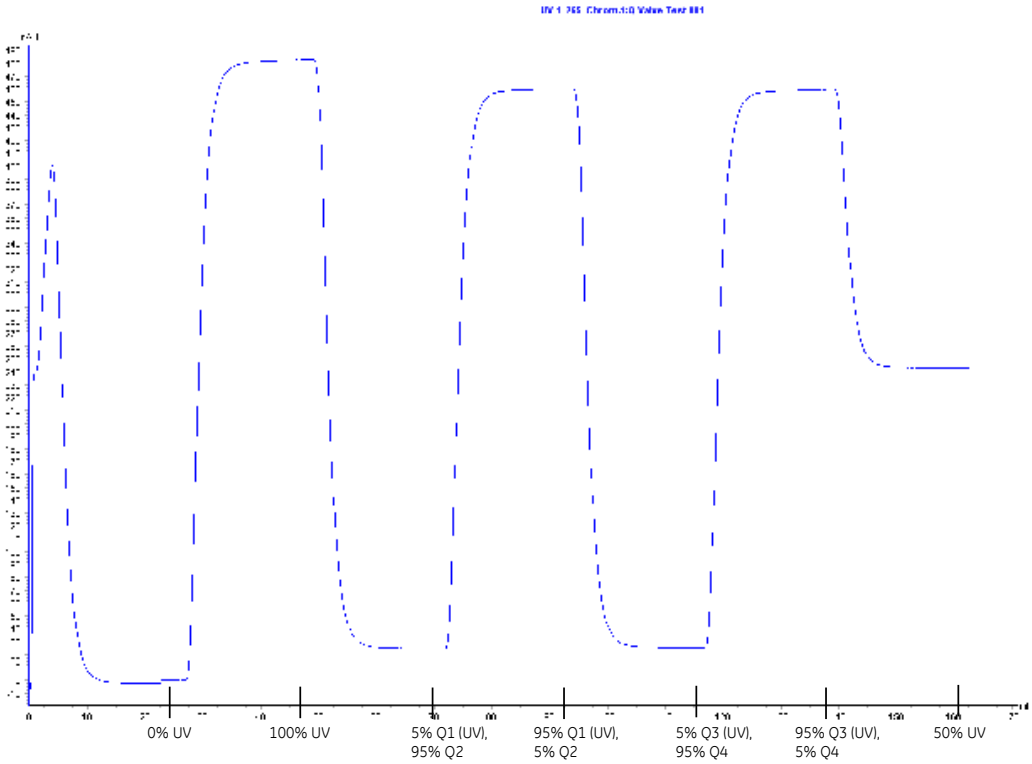

Note: *The illustration shows a chromatogram from a Q valve test on ÄKTA avant 25. A chromatogram from a Q valve test on ÄKTA avant 150 has a similar appearance, but a different scale on the y-axis.*

Possible causes of a failed test

The table below describes possible causes of a failed test. When possible sources of error have been checked and taken care of, run the test once again.

Cause	Action
Disturbances caused by air trapped in Quaternary valve or any of the System pumps	Make sure to prime all Q inlets and purge the System pumps before method start, see *Section 5.4.3 Prime Q inlets, on page 176*.
Disturbances caused by damaged pump piston seals.	Replace piston seals. See ÄKTA avant Operating Instructions, Maintenance chapter.
Unstable or incorrect UV signal, or drifting base line - faulty UV monitor	See *UV monitor U9-M and UV detector unit, on page 360*
Wrong mixer chamber size or faulty mixer	Change mixer chamber or replace the Mixer. See *Section 7.8.2 Replace the Mixer, on page 335*.
Faulty Quaternary valve	See *Quaternary valve, on page 380*
Faulty System pumps	See *Section 8.6 Troubleshooting: Pumps, on page 394*
Incorrect preparation of buffer and tubing	Make sure that the system was correctly prepared, see *Prepare the Q valve test, on page 250*.

6.6 System test

Method description

The System test checks the solvent delivery, the functionality of the UV and conductivity monitoring systems, and the valve functionality of the standard system.

The method run takes approximately 30 minutes.

Required material

The following material is required:

- Distilled water
- 1% acetone and 1 M NaCl in distilled water
- Capillary loop **Ref 1**
- Syringe, 25 to 30 ml
- For ÄKTA avant 25: Mixer, 1.4 ml
- For ÄKTA avant 150: Mixer, 5 ml

Prepare the test

Follow the instructions to prepare the system before method start.

Step	Action
1	Immerse the piece of inlet tubing marked **A1** in distilled water.
2	Immerse the piece of inlet tubing marked **B1** in 1% acetone and 1 M NaCl in distilled water.
3	Immerse the piece of inlet tubing marked **Buff** in 1% acetone and 1 M NaCl in distilled water.
4	Connect the capillary loop marked **Ref 1** between Column valve ports **1A** and **1B** to generate a back pressure.
5	For ÄKTA avant 25: Make sure that the Mixer with a chamber volume of 1.4 ml is installed. For ÄKTA avant 150: Make sure that the Mixer with a chamber volume of 5 ml is installed. For information on how to change Mixer, see *Section 7.8.2 Replace the Mixer, on page 335*.

Step	Action
6	Prime the buffer inlets and purge System pump A and System pump B. See *Section 5.4.1 Prime buffer inlets and purge system pumps, on page 164*.

Run and evaluate the test

Follow the instructions described in *Section 6.1 General performance test actions, on page 237* to start, run and automatically evaluate the performance test.

Possible causes of a failed test

The following tables describe possible causes of a failed test. When possible sources of error have been checked and corrected, repeat the test.

Faulty Gradient Test Result

Cause	Action
Disturbances caused by air trapped in any of the pumps	Make sure to prime the buffer inlets and to purge the System pumps and the Sample pump before method start. See *Section 5.4.1 Prime buffer inlets and purge system pumps, on page 164* and *Section 5.4.2 Prime sample inlets and purge Sample Pump, on page 171*.
Disturbances caused by damaged pump piston seals.	Replace piston seals. See ÄKTA avant Operating Instructions, Maintenance chapter.
Unstable or incorrect UV signal, or drifting base line - faulty UV monitor	See *UV monitor U9-M and UV detector unit, on page 360*
Wrong mixer chamber size or faulty Mixer	Change mixer chamber or replace the Mixer. See *Section 7.8.2 Replace the Mixer, on page 335*.

Faulty Step Response Result

Cause	Action
If all values are faulty - air in the pump or a faulty pump	Air in pumps: Make sure to prime the buffer inlets and to purge the System pumps and the Sample pump before method start. See *Section 5.4.1 Prime buffer inlets and purge system pumps, on page 164* and *Section 5.4.2 Prime sample inlets and purge Sample Pump, on page 171*. Faulty pump. See *Section 8.6 Troubleshooting: Pumps, on page 394*.
Faulty values at 5% - damaged pump piston seal in System pump B	Replace piston seals. See ÄKTA avant Operating Instructions, Maintenance chapter.
Faulty values at 95% - damaged pump piston seal in System pump A	Replace piston seals. See ÄKTA avant Operating Instructions, Maintenance chapter.

Faulty UV Absorbance Test

Cause	Action
Incorrectly prepared acetone solution	Make sure that the acetone solution is 1% and that no solution has evaporated.

Faulty Pulsation Test

Cause	Action
Air trapped in the pumps	Make sure to prime and purge the system pumps before starting the test, see *Section 5.4.1 Prime buffer inlets and purge system pumps, on page 164*.

Faulty Conductivity Test Result

Cause	Action
Incorrectly prepared NaCl solution	Make sure that the NaCl solution is 1.00 M.

Cause	Action
The value set for the Cond temp compensation factor is not optimal	If the test is performed at cold room temperature, open the ***System Settings*** dialog box, select ***Conductivity:Cond temp compensation*** and set the ***Compensation factor*** to 2.1

Faulty UV Noise Test

Cause	Action
Air or dirt in the UV flow cell	Flush or clean the UV cell, see *Section 7.5.1 Clean the UV flow cell, on page 280*.
Impure buffer	Check buffers for impurities.

Faulty Pressure Check Test

Cause	Action
Folded, twisted or blocked tubing	Check the tubing.
Dirt in inline filter	Replace the inline filter, see *Section 7.3.2 Replace the inline filter, on page 272*.
System pressure monitor not calibrated	Calibrate the pressure monitor, see *Section 7.7.2 Calibrate the pressure monitors, on page 320*.

6.7 UV monitor U9-L test

Method description

UV U9-L test checks the functionality of the UV monitor **U9-L**.

The method run takes approximately 10 minutes.

Required configuration

A correctly installed UV monitor **U9-L** is required to run the test.

Required material

The following materials are required:

- Distilled water
- 1% acetone in distilled water
- **Ref 1** tubing, see *Reference tubing, on page 436*
- Syringe, 25 to 30 ml
- Mixer, 1.4 ml

Prepare the UV U9-L test

Follow the instructions to prepare the system before method start.

Step	Action
1	Direct outlet tubing **W** and **W1** to a waste container.
2	Place inlet tubing **A1** into distilled water.
3	Place inlet tubing **B1** into a solution of 1% acetone in distilled water.
4	Connect the **Ref 1** tubing on the Column valve position 1, to generate a back pressure.
5	Make sure that the Mixer with a chamber volume of 1.4 ml is installed. For information on how to change Mixer, see *Section 7.8.2 Replace the Mixer, on page 335*.

Step	Action
6	Prime the buffer inlets and purge System pump A and System pump B. See *Section 5.4.1 Prime buffer inlets and purge system pumps, on page 164*.

Run and evaluate the test

Follow the instructions described in *Section 6.1 General performance test actions, on page 237* to start, run and automatically evaluate the performance test.

Illustration of chromatogram

The illustration below shows a chromatogram from a function test with UV monitor **U9-L**.

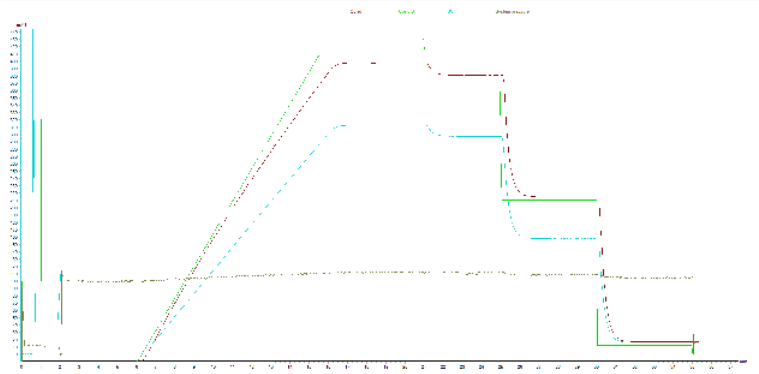

Possible causes of a failed test

The following tables describe possible causes of a failed test. When possible sources of error have been checked and corrected, repeat the test.

Faulty UV Absorbance Test

Cause	Action
Incorrectly prepared acetone solution	Make sure that the acetone solution is 1% and that no solution has evaporated.
Wrong UV cell path length set in UNICORN	See, *Calibration of the second UV monitor flow cell length, on page 328*.

7 Maintenance

About this chapter

This chapter describes the maintenance program for ÄKTA avant and provides instructions for maintenance and replacement of spare parts.

In this chapter

This chapter contains the following sections:

Section	See page
7.1 Maintenance Manager	260
7.2 Maintenance program	265
7.3 Weekly maintenance	269
7.4 Monthly maintenance	275
7.5 Semiannual maintenance	279
7.6 Maintenance when required	284
7.7 Calibration procedures	317
7.8 Replacement procedures	332

7.1 Maintenance Manager

Introduction

Maintenance Manager allows the user to display general information about the system and its modules, and also operational statistics of the modules. Notifications for maintenance actions of the system and its modules are predefined. The user can add automated maintenance notifications for the system. Maintenance notifications are based on calender periods of system use, and for some modules also on operational statistics.

Open Maintenance Manager

In the ***System Control*** module, on the ***System*** menu, click Maintenance Manager to open the ***Maintenance Manager*** dialog box.

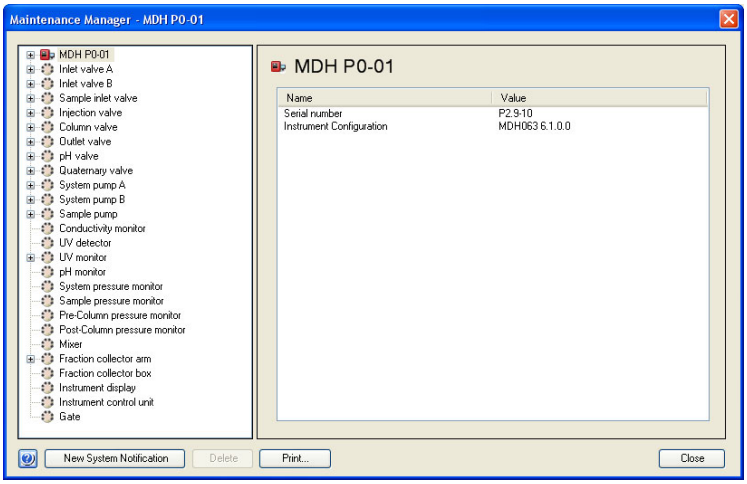

View general information and statistics

In the left side of the ***Maintenance Manager*** dialog box, select the system of interest to view general information of the selected system. When modules are selected, operational statistics are also displayed.

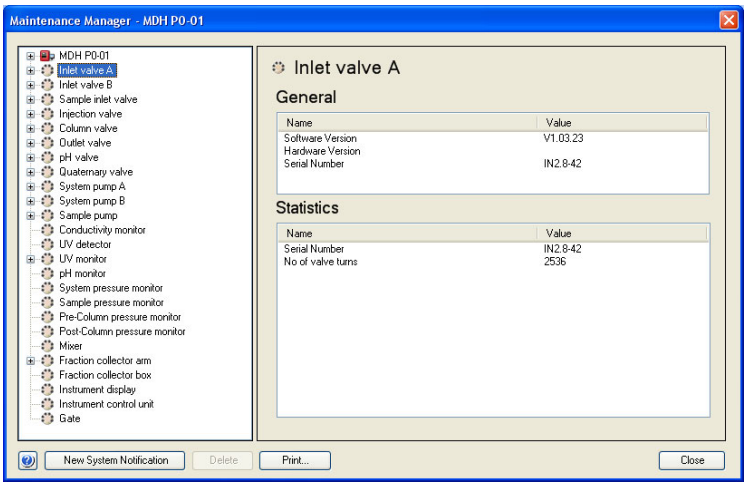

View maintenance notifications

Click the plus symbol (**+**) of the system of interest to expand the list of related maintenance notifications. Select a notification to view notification details.

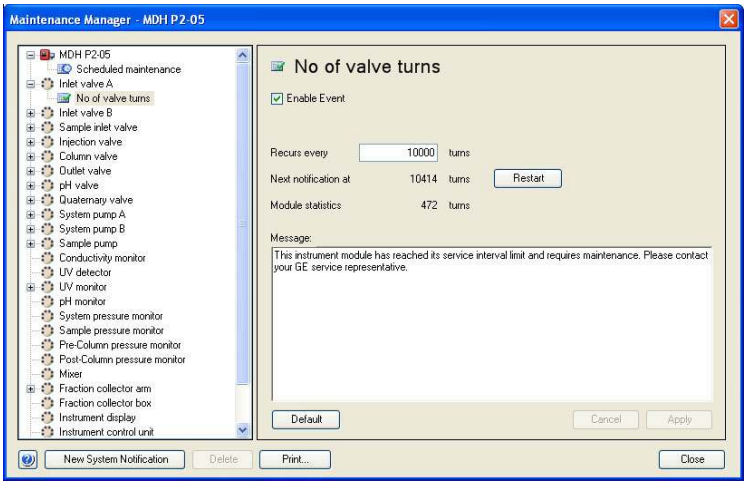

Note: *Modules with no plus symbol (**+**) have no related maintenance notifications.*

Edit a maintenance notification

Follow the instruction to edit a maintenance notification.

Step	Action
1	In the left side field of the ***Maintenance Manager*** dialog box, select a maintenance notification. *Result:* Details of the selected maintenance notification are displayed in the dialog box. 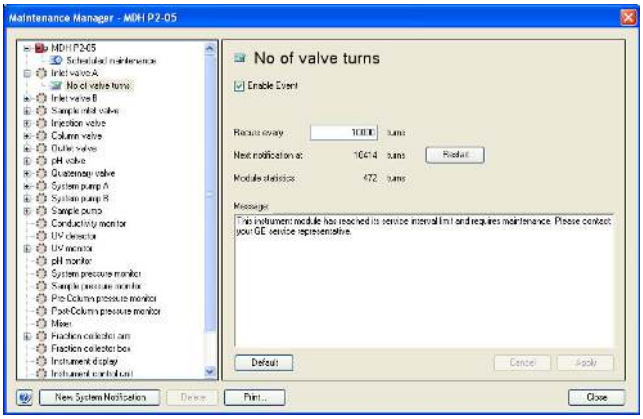
2	Edit the maintenance notification as desired: • Select the ***Enable Event*** checkbox to activate the notification. If the box is unchecked, the notification will not be issued. • Enter a new interval after which the new notification will be issued. • Click ***Restart*** to reset the counter and add a complete interval before the next notification. • Edit the message that will be shown in the maintenance notification. • Click ***Default*** to restore the default settings for maintenance notifications.
3	Click ***Apply*** to save the changes.

Add a new system notification

The user can add new system notifications to the list of system events.

Follow the instructions to add a new system notification.

Step	Action
1	In the ***Maintenance Manager*** dialog box, click ***New System Notification***. *Result:* The ***NewNotification*** field appears in the ***Maintenance Manager*** dialog box. 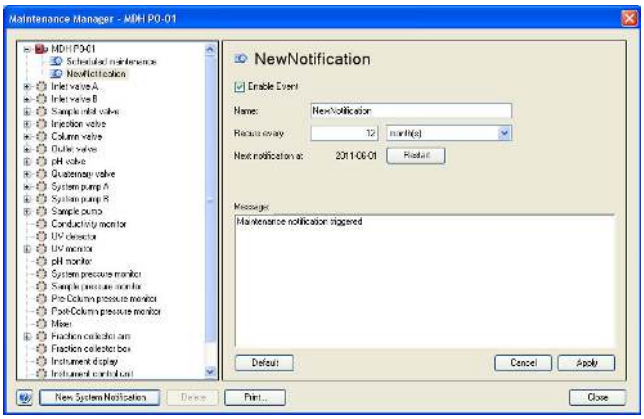
2	In the ***NewNotification*** field: • Enter a name for the new notification. • Select a time interval after which the new notification will be issued. • If desired, write a message that will be shown for the maintenance notification.
3	Click ***Apply*** to save the changes and apply the notification settings.

Delete a user defined system notification

To delete a user defined system notification, select the notification in the ***Maintenance Manager*** dialog box and click ***Delete***.

Note: *Module notifications are predefined and cannot be deleted. If desired, they can be disabled.*

Handle a maintenance notification

Each maintenance notification has a time interval after which the notification is issued. When this time interval has been reached, a ***Maintenance Notification*** message appears.

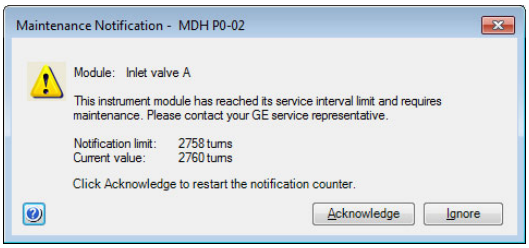

Follow the instruction to handle the notification.

Click...	to...
Acknowledge	reset the counter for a new maintenance notification period. ***Note:*** *Make sure that the maintenance action is performed as instructed after the notification is acknowledged, otherwise the system performance may deteriorate.*
Ignore	close the message without action. ***Note:*** *The **Maintenance Notification** will be displayed each time the **System Control** module is opened until the notification is acknowledged.*

7.2 Maintenance program

Introduction

This section lists the periodic maintenance activities that should be performed by the user of ÄKTA avant, as well as maintenance activities that should be performed when required.

Maintenance is divided into:

- Daily maintenance
- Weekly maintenance
- Monthly maintenance
- Semiannual maintenance
- Maintenance when required

WARNING

Hazardous biological agents during run. When using hazardous biological agents, run ***System CIP*** and ***Column CIP*** to flush the entire pump with bacteriostatic solution (e.g. 1M NaOH) followed by a neutral buffer and finally distilled water, before service and maintenance.

Hazardous chemicals during run. When using hazardous chemicals, run ***System CIP*** and ***Column CIP*** to flush the entire system tubing with distilled water, before service and maintenance.

Always use appropriate Personal Protective Equipment (PPE) during operation and maintenance of this product.

Periodic maintenance program

The following periodic maintenance should be performed by the user of ÄKTA avant.

Interval	Maintenance action	See section
Daily	Calibrate the pH monitor	*Section 7.7.1 Calibrate the pH monitor, on page 318*
Weekly	Check pressure monitors, calibrate if needed	*Section 7.7.2 Calibrate the pressure monitors, on page 320*

Interval	Maintenance action	See section
Weekly	Change pump rinsing solution	*Section 7.3.1 Change pump rinsing solution, on page 270*
Weekly	Check inline filter, replace if necessary	*Section 7.3.2 Replace the inline filter, on page 272*
Weekly	Clean built-in fraction collector sensors	*Section 7.3.3 Clean built-in fraction collector sensors, on page 273*
Monthly	Check the flow restrictor	*Section 7.4.1 Check the flow restrictor, on page 276*
Monthly	Check pump flow restrictors	*Section 7.4.2 Check the function of the pump flow restrictors, on page 278*
Bi-annual	Clean the UV flow cell	*Section 7.5.1 Clean the UV flow cell, on page 280*
Bi-annual	Replace pH electrode	*Section 7.5.2 Replace the pH electrode, on page 283*

Maintenance when required

The following maintenance should be performed by the user of ÄKTA avant when required.

Maintenance action	See section
Clean the instrument externally	*Section 7.6.1 Clean the instrument externally, on page 285*
Perform System CIP (system cleaning-in-place)	*Section 7.6.2 Perform System CIP, on page 286*
Perform Column CIP (column cleaning-in-place)	*Section 7.6.3 Perform Column CIP, on page 294*
Clean the built-in fraction collector	*Section 7.6.4 Clean built-in fraction collector, on page 298*
Clean the Fraction collector F9-R	*Section 7.6.5 Clean Fraction collector F9-R, on page 301*
Clean Fraction collector F9-R DropSync sensor	*Section 7.6.5 Clean Fraction collector F9-R, on page 301*

Maintenance action	See section
Replace tubing and connectors	*Section 7.8.1 Replace tubing and connectors, on page 333*
Storage of pH electrode	*Section 7.6.6 Storage of the pH electrode, on page 302*
Clean the pH electrode	*Section 7.6.7 Clean the pH electrode, on page 304*
Regenerate dried out pH electrode	*Section 7.6.8 Regenerate dried out pH electrode, on page 308*
Clean the conductivity monitor flow cell	*Section 7.6.12 Clean the Conductivity flow cell, on page 315*
Calibrate the Conductivity Monitor	*Section 7.7.3 Calibrate the Conductivity Monitor, on page 324*
Calibrate the UV monitors	*Section 7.7.4 Calibrate the UV monitors, on page 328*
Replace Mixer	*Section 7.8.2 Replace the Mixer, on page 335*
Replace O-ring in Mixer	*Section 7.8.3 Replace the O-ring inside the Mixer, on page 337*
Replace UV flow cell	*Section 7.8.4 Replace the UV monitor U9-M flow cell, on page 339* and *Section 7.8.5 Replace UV monitor U9-L flow cell, on page 342*
Replace the flow restrictor	*Section 7.8.6 Replace Flow restrictor, on page 344*
Replace inlet filters	*Section 7.8.7 Replace the inlet filters, on page 345*
Wipe off excess oil from the pump head	*Section 7.6.11 Wipe off excess oil from the pump head, on page 314*
Clean the check valves	*Section 7.6.9 Clean pump head check valves, on page 309*
Replace check valves	*Section 7.8.8 Replace pump head check valves, on page 346*
Replace pump piston seals	*See ÄKTA avant Operating Instructions*
Replace pump pistons	*See ÄKTA avant Operating Instructions*
Replace pump rinsing system tubing	*Section 7.8.9 Replace pump rinsing system tubing, on page 349*

Maintenance action	See section
Replace valve modules	*Section 7.8.10 Replace a valve module, on page 351*
Clean pump flow restrictors	*Section 7.6.10 Clean pump flow restrictors, on page 312*

7.3 Weekly maintenance

About this section

This section provides instructions for weekly maintenance activities.

In this section

This section contains the following subsections:

Section	See page
7.3.1 Change pump rinsing solution	270
7.3.2 Replace the inline filter	272
7.3.3 Clean built-in fraction collector sensors	273

7.3.1 Change pump rinsing solution

Maintenance interval

Replace the pump rinsing solution in the system pumps and the sample pump every week to prevent bacterial growth.

Required material

The following material are required:

- 20°C ethanol
- Syringe, 25 to 30 ml

Change the rinsing solution and prime the rinsing system

Follow the instruction below to change rinsing solution and prime the pump piston rinsing systems. See the tubing configuration of the pump piston rinsing systems in *Illustration of the pump piston rinsing systems, on page 57*.

Step	Action
1	Unscrew the rinsing system tubes from the holders and discard the used pump rinsing solution. 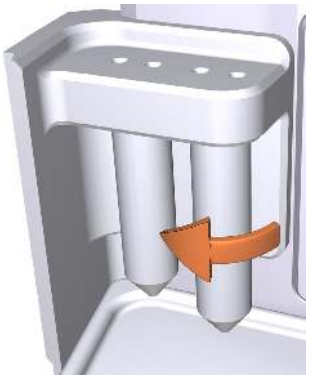
2	Fill each of the rinsing system tubes with 50 ml of 20°C ethanol.
3	Screw the rinsing solution tubes back in the holders.

Step	Action
4	Immerse the inlet tubing to the System pump piston rinsing system in one of the rinsing solution tubes. ***Note:*** *Make sure that the inlet tubing reaches to the very bottom of the rinsing solution tube.*
5	Immerse the inlet tubing to the Sample pump piston rinsing system in the other rinsing solution tube. ***Note:*** *Make sure that the inlet tubing reaches to the very bottom of the rinsing solution tube.*
6	Connect a 25 to 30 ml syringe to the outlet tubing of the System pump piston rinsing system. Draw liquid slowly into the syringe. 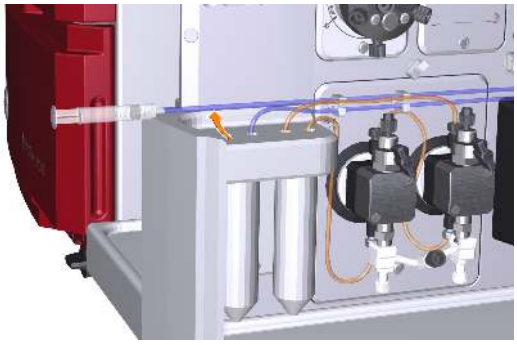
7	Disconnect the syringe and discard its contents.
8	Immerse the outlet tubing in the rinsing solution tube where the inlet tubing of the System pump piston rinsing system is immersed.
9	Connect a 25 to 30 ml syringe to the outlet tubing from the Sample pump piston rinsing system. Draw liquid slowly into the syringe.
10	Disconnect the syringe and discard its contents.
11	Immerse the outlet tubing in the rinsing solution tube where the inlet tubing of the Sample pump piston rinsing system is immersed.
12	Fill the rinsing solution tubes so that each of the tubes contains 50 ml of 20°C ethanol.

7.3.2 Replace the inline filter

Maintenance interval

Replace the inline filter that is located in the top section of the Mixer every week. When it starts to get clogged the back pressure from the filter will increase as registered by the system pressure sensor. An indication of a clogged inline filter is that the difference between the system pump pressure signal and the pre-column pressure signal will start to rise.

Required material

The following materials are required:

- Online filter kit
- Forceps
- Gloves

Instruction

Follow the instructions to replace the inline filter that is located in the top of the Mixer.

Tip: *Use forceps and gloves during the replacement procedure to avoid contaminating the mixer components.*

Step	Action
1	Unscrew the top section of the Mixer.
2	Remove the old filter using forceps. Replace the support net if this is damaged. Fit the new filter.
3	Check the O-ring of the Mixer. If the O-ring is damaged, replace it according to *Section 7.8.3 Replace the O-ring inside the Mixer, on page 337*.
4	While holding the Mixer upright, screw the top section back onto the Mixer.

7.3.3 Clean built-in fraction collector sensors

Maintenance interval

Clean the fraction collector sensors every week, or when required, for example if the fraction collector fails to read the tray ID or does not collect fractions correctly.

Required material

The following material is required:

- Wash bottle
- Water or 20% ethanol
- Cloth

Instructions

Follow the instructions to clean the fraction collector sensors. See *Illustration of the dispenser head, on page 86* for the location of the fraction collector sensors.

Step	Action
1	In the ***System Control*** module, on the ***Manual*** menu, click ***Execute Manual Instructions***. In the ***Manual Instructions*** dialog, select ***Fraction collection:Frac cleaning position*** and then click ***Execute***. *Result:* The dispenser head moves to cleaning position, and the instrument display states ***System pause***.

Step	Action
2	Wipe off the dispenser head and the DropSync and type code reader sensor windows using a wash bottle with water or 20% ethanol and a cloth. 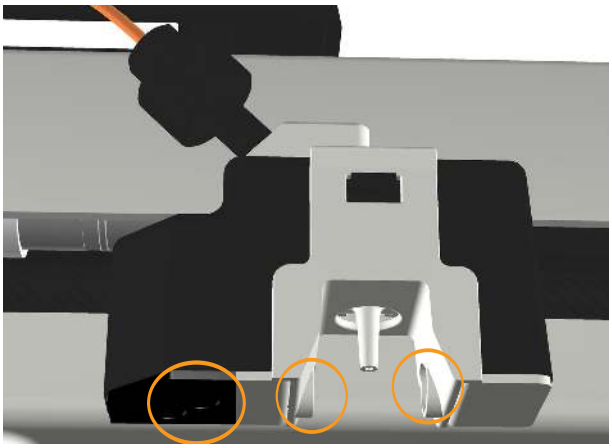
3	Let the dispenser head dry completely before starting a run.
4	Close the fraction collector door. *Result:* Automatic scanning is performed.
5	In the ***System Control*** module, press the ***End*** button in the toolbar. *Result:* The dispenser head moves to home position, and the instrument display states ***Ready***.

7.4 Monthly maintenance

Introduction

This section provides instructions for monthly maintenance.

In this section

This section contains the following subsections

Section	See page
7.4.1 Check the flow restrictor	276
7.4.2 Check the function of the pump flow restrictors	278

7.4.1 Check the flow restrictor

Maintenance interval

Check the back pressure for the flow restrictor every month.

Instruction

Follow the instruction to check the back pressure of Flow restrictor **FR-902**.

Step	Action
1	Immerse the piece of inlet tubing marked **A1** in distilled water, and immerse the piece of tubing from Outlet valve port **W** in a waste container.
2	In the ***System Control*** module, on the ***Manual*** menu, click ***Execute Manual Instructions***. *Result:* The ***Manual instructions*** dialog opens.
3	In the ***Manual instructions*** dialog: • Select ***Flowpath:Injection valve***, and select ***Manual Load***. Click ***Insert***. • Select ***Flowpath:Column valve***, and select ***By-pass***. Click ***Insert***. • Select ***Flowpath:pH valve***, and set the pH electrode to ***Off-line*** and the Restrictor to ***In-line***. Click ***Insert***. • Select ***Flowpath:Outlet valve***, and select ***Out-Waste***. Click ***Insert***. • Select ***Pumps and Pressures:System flow*** and set the ***Flow rate*** to 3.0 ml/min. Click ***Insert***. • Click ***Execute***. *Result:* A system flow of 3.0 ml/min starts.
4	Note the ***PreC pressure*** displayed in the ***Run Data*** pane. ***Tip:*** *If **PreC pressure** is not showing, click the **Customize** icon. In the **Customize** dialog, under the **Run Data Groups** tab, select to view **PreC pressure**.*
5	In the ***Manual instructions*** dialog: • Select ***Flowpath:pH valve***, and set the pH electrode to ***Off-line*** and the Restrictor to ***Off-line***. • Click ***Execute***.
6	Note the ***PreC pressure*** displayed in the ***Run Data*** pane.

Step	Action
7	Calculate the difference between the two pressure values noted in step 4 and step 6.
8	Check that the pressure difference is within the range 0.2 ± 0.05 MPa. If this is not the case, the Flow restrictor should be replaced, see *Section 7.8.6 Replace Flow restrictor, on page 344*.

7.4.2 Check the function of the pump flow restrictors

Maintenance interval

Check the function of the pump flow restrictors every month.

Instruction

Follow the instruction to check the function of the pump flow restrictors.

Step	Action
1	Make sure that inlet line **A1** and **B1** are primed with water or buffer and the bottles should be standing on the buffer tray. The flow shall be off, no method or manual run running.
2	Loosen the pieces of tubing marked **2A** and **2B** in their upper position, where they connect to the pressure monitor.
3	Check if there are siphoning. If the pump flow restrictors are working there should not be any siphoning.
4	If there are siphoning, the pump flow restrictors must be replaced at the next service occasion by a GE representative.
5	The piece of tubing marked **2A** is connected to pump flow restrictor A, the piece of tubing marked **2B** is connected to pump flow restrictor B.
6	Check the sample pump flow restrictor in the same way, loosen the piece of tubing marked **2S** in its upper position, where it connects to the pressure monitor.

7.5 Semiannual maintenance

Introduction

This section provides instructions for semiannual (once every six months) maintenance activities.

In this section

This section contains the following subsections:

Section	See page
7.5.1 Clean the UV flow cell	280
7.5.2 Replace the pH electrode	283

7.5.1 Clean the UV flow cell

Maintenance interval

Clean the UV flow cell every six months, or when required.

NOTICE

Keep UV flow cell clean. Do not allow solutions containing dissolved salts, proteins or other solid solutes to dry out in the flow cell. Do not allow particles to enter the flow cell, as damage to the flow cell may occur.

Required material

The following materials are required:

- Luer connector
- Waste container
- Syringe, 25 to 30 ml
- 10% surfactant detergent solution (e.g., Decon™ 90, Deconex 11, or RBS 25)
- Distilled water

Instruction

Follow the instructions below to clean the UV flow cell of UV Monitor **U9-M** or UV Monitor **U9-L**. The illustrations show UV Monitor **U9-M**, UV Monitor **U9-L** is cleaned in the same way. The UV flow cell can be mounted or not mounted on the instrument during the cleaning procedure.

Step	Action
1	Disconnect the tubing from the top of the UV flow cell, and replace the fingertight connector with a Luer connector.
2	Disconnect the tubing from the bottom of the UV flow cell, and connect a piece of waste tubing to the UV flow cell. Insert the waste tubing into a waste container.
3	Fill a syringe with distilled water, and connect the syringe to the Luer connector.
4	Squirt the distilled water through the UV flow cell in small amounts. Disconnect the syringe.
5	Fill a syringe with a 10% surfactant detergent solution, such as Decon 90, Deconex 11, RBS 25 or equivalent, and connect the syringe to the Luer connector. ***Tip:*** *Heat the 10% surfactant detergent solution to 40°C to increase the cleaning effect.*

Step	Action
6	Squirt the detergent solution through the UV flow cell about five times.
7	Leave the detergent solution in the flow cell for at least 20 minutes.
8	Inject the detergent solution remaining in the syringe into the flow cell. Disconnect the syringe.
9	Fill a syringe with distilled water. Connect the syringe to the Luer connector.
10	Inject the distilled water into the UV flow cell to rinse the flow cell. Disconnect the syringe.
11	Disconnect the Luer connector from the top of the UV flow cell. Reconnect the piece of tubing from the Column valve to the top of the UV flow cell.
12	Disconnect the waste tubing from the bottom of the UV flow cell. Reconnect the piece of tubing from the Conductivity monitor to the bottom of the UV flow cell.

7.5.2 Replace the pH electrode

Maintenance interval

Replace the pH electrode every six months, or when required.

Required material

The following materials are required: pH electrode, deionized water and standard buffer pH 4.

Instruction

CAUTION

pH-electrode. Handle the pH-electrode with care. The glass tip may break and cause injury.

Follow the instructions below to replace the pH electrode.

Step	Action
1	Disconnect the pH electrode cable of the used pH electrode from the connection on the front of the pH valve.
2	Unscrew the nut of the pH electrode by hand, and pull the used electrode away.
3	Unpack the new pH electrode. Remove the cover from the tip of the new pH electrode. Make sure that the electrode is not broken or dry.
4	Prior to first use of the electrode, immerse the glass bulb in deionized water for 30 minutes and then in a standard buffer, pH 4, for 30 minutes.
5	Carefully insert the new pH electrode into the pH flow cell. Tighten the nut by hand to secure the electrode.
6	Connect the pH electrode cable of the new electrode to the connection on the front of the pH valve.
7	Calibrate the new pH electrode, see *Section 7.7.1 Calibrate the pH monitor, on page 318*.

7.6 Maintenance when required

Introduction

This section gives instructions for maintenance activities to be performed when required.

In this section

This section contains the following subsections:

Section	See page
7.6.1 Clean the instrument externally	285
7.6.2 Perform System CIP	286
7.6.3 Perform Column CIP	294
7.6.4 Clean built-in fraction collector	298
7.6.5 Clean Fraction collector F9-R	301
7.6.6 Storage of the pH electrode	302
7.6.7 Clean the pH electrode	304
7.6.8 Regenerate dried out pH electrode	308
7.6.9 Clean pump head check valves	309
7.6.10 Clean pump flow restrictors	312
7.6.11 Wipe off excess oil from the pump head	314
7.6.12 Clean the Conductivity flow cell	315

7.6.1 Clean the instrument externally

Maintenance interval

Clean the the instrument externally when required. Do not allow spilled liquid to dry on the instrument.

Required material

The following materials are required:

- Cloth
- Mild cleaning agent or 20% ethanol

Instruction

Follow the instructions to clean the instrument externally.

Step	Action
1	Check that no run is in progress.
2	Switch off the instrument.
3	Wipe the surface with a damp cloth. Wipe off stains using a mild cleaning agent or 20% ethanol. Wipe off any excess.
4	Let the instrument dry completely before using it.

7.6.2 Perform System CIP

Introduction

The ***System CIP*** method is used to fill the instrument and the selected inlets and outlets with cleaning solution.

WARNING

Hazardous substances. When using hazardous chemicals, take all suitable protective measures, such as wearing protective glasses and gloves resistant to the substances used. Follow local and/or national regulations for safe operation and maintenance of the product.

Hazardous chemicals during run. When using hazardous chemicals, run ***System CIP*** and ***Column CIP*** to flush the entire system tubing with distilled water, before service and maintenance.

Tip: *If hazardous chemicals are used for system or column cleaning, wash the system or columns with a neutral solution in the last phase or step.*

Maintenance interval

Perform a System cleaning in place (System CIP) when required, for example between runs where different samples and buffers are used. This is important to prevent cross-contamination and bacterial growth in the instrument.

Required material

The following materials are required:

- Appropriate cleaning solutions (e.g., 1 M NaOH, buffer solution or distilled water).
- Syringe, 25 ml

Create a System CIP method

Follow the instruction to create a ***System CIP*** method.

Step	Action
1	In the ***Method Editor*** module, • click the ***New Method*** button or • on the ***File*** menu, click ***New Method***. *Result:* The ***New Method*** dialog opens. 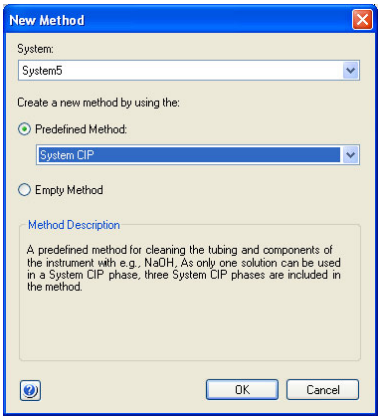

Step	Action
2	In the ***New Method*** dialog. • In the ***System*** list select the name of the system. • Click ***Predefined Method***, then in the ***Predefined Method*** list, click ***System CIP***. • Click ***OK***. *Result:* One ***Method Settings*** phase and three ***System CIP*** phases show in the ***Method Outline*** pane. Each ***System CIP*** phase uses one cleaning solution.
3	If desired, add additional ***System CIP*** phases to the method using the ***Phase Library***.

Step	Action
4	In the ***Phase Properties*** tab of each of the ***System CIP*** phases: • Enter a note for the first solution (optional). • Enter values for ***Flow rate***, ***Volume per position*** and ***Incubation time***.

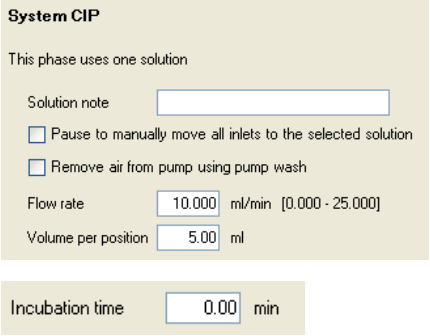

- Define the extent of cleaning by selecting the check boxes.

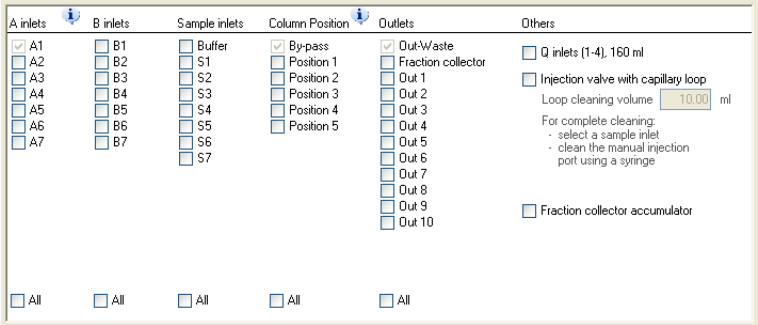

Note:

For complete cleaning of the Injection valve, select at least one of the sample inlets and clean the manual injection port using a syringe (see Clean the manual injection port of the injection valve, on page 291).

Note:

*The pH electrode is not included in **System CIP**, but the flow restrictor is in line. Refer to Section 7.6.7 Clean the pH electrode, on page 304 for instructions on how to clean the pH electrode.*

Step	Action
5	In the ***Method Editor*** module, • click the ***Save the method*** button or • on the ***File*** menu, click ***Save As*** *Result:* The ***Save As*** dialog opens.
6	In the ***Save As*** dialog: • Select a target folder to enable the ***Save*** button. • Type a ***Name*** for the method. • Select a ***System*** from the list. • Click **Save**. *Result:* The created method is saved in the selected folder.

Run a System CIP method

Follow the instructions to run a ***System CIP*** method.

Step	Action
1	In the ***Method Editor*** module, create a ***System CIP*** method according to the previous instructions.
2	Connect by-pass tubing to all selected column positions and loop positions if a loop valve is used.
3	Prepare cleaning solutions and immerse the selected inlet tubing in the solutions. ***Note:*** *Note that each phase uses one solution. All inlets selected in one phase should be immersed in the same cleaning solution.*
4	In the ***System Control*** module, select the created method and start the run.
5	For complete cleaning of the flow path, clean the manual injection port of the Injection valve and the pH valve manually, see the instructions below.

Clean the manual injection port of the injection valve

Follow the instructions to manually clean the manual load position of the Injection valve.

Step	Action
1	In the ***System Control*** module, on the ***Manual*** menu, click ***Execute Manual Instructions***. *Result:* The ***Manual instructions*** dialog opens.
2	In the ***Manual instructions*** dialog, select ***Flowpath:Injection valve***, and click ***Manual Load***. Click ***Execute***.
3	Connect a suitable sample loop to Injection valve ports **LoopF** (fill) and **LoopE** (empty). ***Note:*** *Do not use a Superloop when cleaning the Injection valve.*
4	Connect tubing to Injection valve port **W1**, and direct this tubing to a waste container.

Step	Action
5	Fill a syringe with approximately 10 ml of an appropriate cleaning solution (e.g., 1M NaOH). Connect the syringe to Injection valve port **Syr**, and inject the cleaning solution. Leave the cleaning solution in place for 20 minutes.
6	Fill a syringe with distilled water. Connect the syringe to Injection valve port **Syr**, and inject the distilled water.

Clean the pH valve

Follow the instructions to clean the pH valve. The calibration function is used to switch the valve position. However, no calibration is performed.

Step	Action
1	Connect tubing to pH valve port **W3**, and direct the other end of this tubing to a waste container.
2	Unscrew the pH electrode from the pH valve, and replace it with the dummy electrode.

Step	Action
3	Open the ***System Control*** module, on the ***System*** menu, click ***Calibrate***. *Result:* The ***Calibration*** dialog opens. 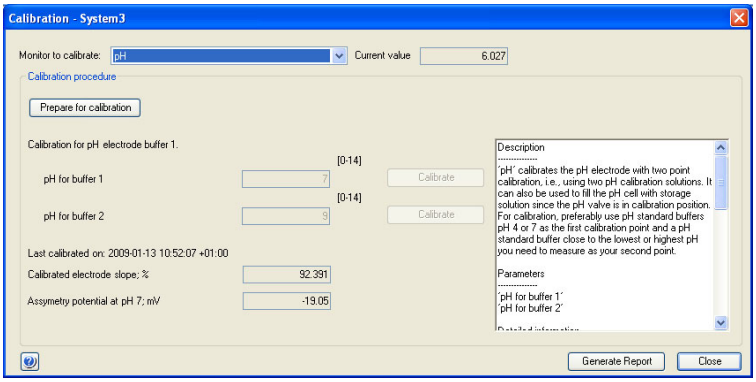
4	In the ***Calibration*** dialog, in the ***Monitor to calibrate*** list, click ***pH***.
5	Click ***Prepare for calibration***. *Result*: The pH valve switches to the calibration position.
6	Fill a syringe with approximately 10 ml of 1 M NaOH. Connect the syringe to the pH valve port **Cal**, and inject the solution. Leave the cleaning solution in place for 20 minutes.
7	Fill a syringe with distilled water. Connect the syringe to the pH valve port **Cal**, and inject the distilled water.
8	Click ***Close***. *Result:* The pH valve switches back to the default position and the ***Calibration*** dialog closes. No calibration is performed.

7.6.3 Perform Column CIP

Introduction

The ***Column CIP*** method is used to clean the column after purification runs, to remove non-specifically bound proteins and to minimize the risk for carry-over between different purification runs.

WARNING

- **Hazardous substances.** When using hazardous chemicals, take all suitable protective measures, such as wearing protective glasses and gloves resistant to the substances used. Follow local and/or national regulations for safe operation and maintenance of the product.
- **Hazardous chemicals during run.** When using hazardous chemicals, run ***System CIP*** and ***Column CIP*** to flush the entire system tubing with distilled water, before service and maintenance.

Tip: *If hazardous chemicals are used for system or column cleaning, wash the system or columns with a neutral solution in the last phase or step.*

Maintenance interval

Perform a Column cleaning in place (Column CIP) when required, for example between runs where different samples are used.

Required material

The following materials are required:

- Appropriate cleaning solutions. Please refer to the instructions for use of the column.

Create a Column CIP method

Follow the instructions to create a ***Column CIP*** method.

Step	Action
1	In the ***Method Editor*** module, • click the ***New Method*** button or • on the ***File*** menu, click ***New Method***. *Result:* The ***New Method*** dialog opens.
2	In the ***New Method*** dialog. In the ***System*** list select the name of the system. Click ***Predefined Method***. In the ***Predefined Method*** list, click ***Column CIP***. Click ***OK***. 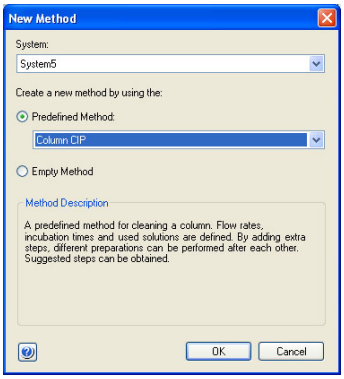 *Result:* One ***Method Settings*** phase and one ***Column CIP*** phase will be displayed in the ***Method Outline*** pane.
3	In the ***Phase Properties*** tab of the ***Method Settings*** phase, select ***Column type*** and ***Column position***.

Step	Action
4	In the ***Phase Properties*** tab of the ***Column CIP*** phase: • Click ***Add Step*** to add a step. • Select the step and click ***Remove Step*** to remove a step. • To enter a value, select the cell and enter or select a new value.

Column CIP

	CIP solution note	Inlet A	Inlet B	%B (0-100)	Linear gradient	Fill System	Volume (CV)	Flow Rate (0-25) ml/min	Flow direction	Outlet	Incubation time (min)
1		A1	B1	0.00	☐	☑	1.00	1.000	Down flow	Out-Waste	0.00

Add Step | Remove Step | Restore | Get Suggested Steps

5	In the ***Phase Properties*** tab of the ***Column CIP*** phase, click the ***Get Suggested Steps*** button to get a suggested procedure for the selected column type. Note that this function is not available for all column types. *Result*: Suggested cleaning steps for the selected column type are displayed.

	CIP solution note	Inlet A	Inlet B	%B (0-100)	Linear gradient	Fill System	Volume (CV)	Flow Rate (0-25) ml/min	Flow direction	Outlet	Incubation time (min)
1	2M NaCl	A1	B1	0.00	☐	☑	2.00	2.500	Down flow	Out-Waste	0.00
2	1M NaOH	A1	B1	0.00	☐	☑	4.00	2.500	Down flow	Out-Waste	0.00
3	2M NaCl	A1	B1	0.00	☐	☑	2.00	2.500	Down flow	Out-Waste	0.00
4	Water	A1	B1	0.00	☐	☑	2.00	2.500	Down flow	Out-Waste	0.00
5	Equilibration/storage ...	A1	B1	0.00	☐	☑	4.00	2.500	Down flow	Out-Waste	0.00

6	If several cleaning solutions are used, change settings for ***Inlet A*** and/or ***Inlet B***. Select one inlet for each solution. If Inlet B is used, remember to edit the values in the **%B** column.

	CIP solution note	Inlet A	Inlet B	%B (0-100)	Linear gradient	Fill System	Volume (CV)	Flow Rate (0-25) ml/min	Flow direction	Outlet	Incubation time (min)
1	2M NaCl	A1	B1	0.00	☐	☑	2.00	2.500	Down flow	Out-Waste	0.00
2	1M NaOH	A2	B1	0.00	☐	☑	4.00	2.500	Down flow	Out-Waste	0.00
3	2M NaCl	A1	B1	0.00	☐	☑	2.00	2.500	Down flow	Out-Waste	0.00
4	Water	A3	B1	0.00	☐	☑	2.00	2.500	Down flow	Out-Waste	0.00
5	Equilibration/storage ...	A4	B1	0.00	☐	☑	4.00	2.500	Down flow	Out-Waste	0.00

Step	Action
7	In the ***Method Editor*** module, • click the ***Save the method*** button or • on the ***File*** menu, click ***Save As*** *Result:* The ***Save As*** dialog opens.
8	In the ***Save As*** dialog: • Select a target folder to enable the ***Save*** button. • Type a ***Name*** for the method. • Select a ***System*** from the list. • Click ***Save***. *Result:* The created method is saved in the selected folder.

Run a Column CIP method

Follow the instructions below to run a ***Column CIP*** method.

Step	Action
1	In the ***Method Editor*** module, create a ***Column CIP*** method according to the previous instruction.
2	Prepare cleaning solutions and immerse the selected inlets in the solutions.
3	Connect the column to the selected column position.
4	In the ***System Control*** module, select the created method and start the run.

7.6.4 Clean built-in fraction collector

Maintenance interval

Clean the Fraction collector when required, for example if liquid has been spilled in the Fraction collector chamber. The internal tubing of the fraction collector may need to be replaced for maintenance or for process purposes. Information on how and when to replace the internal tubing can be found in *Section 7.8.1 Replace tubing and connectors, on page 333*

Required material

The following materials are required:

- Wash bottle
- Water or 20% ethanol
- Cloth

Instruction

Follow the instruction below to clean the interior of the fraction collector. See the locations of the components of the fraction collector in *Section 3.10.2 Illustrations of the built-in fraction collector, on page 84*.

Step	Action
1	In ***System Control*** module, on the ***Manual*** menu, click ***Execute Manual Instructions***. *Result:* The ***Manual instructions*** dialog opens.

Step	Action
2	In the ***Manual instructions*** dialog:

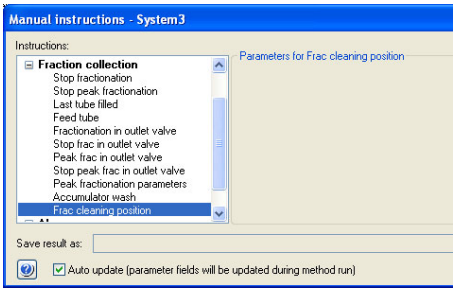

Select ***Fraction collection:Frac cleaning position***.

Click ***Execute***.

Result: The dispenser head moves to cleaning position, and the instrument display states ***System pause***.

3 Open the fraction collector drawer and lift off the cassette tray.

4 Wash the cassettes and the cassette tray with water and a mild cleaning agent.

5 Lift off the waste funnel and wash it with water and a mild cleaning agent. Refit the waste funnel.

6 In ÄKTA avant 150 only: Remove the dispenser head cover and wash it with water and a mild cleaning agent. Refit the dispenser head cover.

7 Wipe off the fraction collector chamber interior using a damp cloth. Wipe off stains using a mild cleaning agent or 20% ethanol.

Note:

Be careful not to damage the fractionation arm flat cable.

Tip:

The fraction collector arm can easily be moved to facilitate cleaning of the fraction collector.

Tip:

The cassette tray positioning discs can easily be removed to facilitate cleaning of the fraction collector. Make sure to refit the discs before the cassette tray is inserted in the fraction collector chamber. In ÄKTA avant 25, all three discs are identical. In ÄKTA avant 150, the disc that is higher and has a smaller diameter shall be placed in the rearmost disc position.

Step	Action
8	Wipe off the dispenser head and its diode windows using a wash bottle with water or 20% ethanol and a cloth. ÄKTA avant 25 has four diode windows and ÄKTA avant 150 has two diode windows (see the following illustrations). Dispenser head in ÄKTA avant 25 Dispenser head in ÄKTA avant 150. ***Note:*** *Be careful not to scratch the diode windows.*
9	Let the fraction collector dry completely before starting a run.
10	Close the fraction collector drawer. *Result:* Automatic scanning is performed.
11	In the ***System Control*** module, click the ***End*** button in the toolbar. *Result:* The dispenser head moves to home position, and the instrument display states ***Ready***.

7.6.5 Clean Fraction collector F9-R

Maintenance interval

Clean the Fraction collector when required, for example in case of liquid spill.

Required material

The following materials are required:

- Water or 20% ethanol
- Cloth

Clean the instrument

Follow the instructions below to clean the instrument externally.

Step	Action
1	Check that no run is in progress.
2	Switch off the instrument.
3	Wipe the surface with a damp cloth. Wipe off stains using a mild cleaning agent or 20% ethanol. Wipe off any excess.
4	Let the Fraction collector F9-R dry completely before restart.

Clean DropSync sensor

Clean the drop sensor photocell located above the tube sensor (see *Front view illustration, on page 129*) with a damp cloth.

7.6.6 Storage of the pH electrode

Maintenance interval

When pH monitoring is not used, the pH electrode can be stored in storage solution inside the pH flow cell. If pH monitoring is not used for a week or longer, inject new storage solution into the pH flow cell or replace the pH electrode with the dummy electrode that was installed in the pH valve on delivery.

Required material

The following materials are required:

- Syringe, 25 to 30 ml
- Storage solution (1:1 mixture of standard buffer, pH 4, and 1 M KNO_3)

Instruction

Follow the instructions below to fill the pH flow cell with storage solution. The calibration function is used to switch the position of the pH valve. However, no calibration is performed.

Step	Action
1	In the ***System Control*** module, on the ***System*** menu click ***Calibrate***. Result: The ***Calibration*** dialog opens. 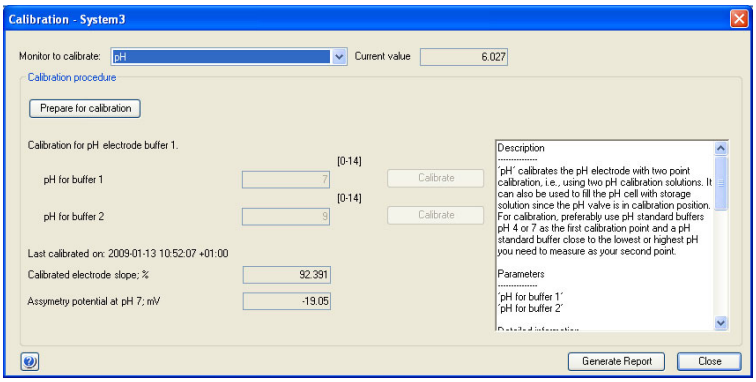
2	In the ***Calibration*** dialog, click ***pH*** on the ***Monitor to calibrate*** drop-down list.

Step	Action
3	Click ***Prepare for Calculation***. *Result*: The pH valve switches to the calibration position.
4	Prepare at least 10 ml storage solution by mixing equal volumes of a standard buffer, pH 4, and a 1 M Potassium Nitrate (KNO_3) solution.
5	Fill a syringe with approximately 10 ml of the storage solution. Connect the syringe to the pH valve port **Cal**, and inject the storage solution.
6	Click ***Close***. *Result:* The pH valve switches back to the default position and the ***Calibration*** dialog closes. No calibration is performed.

7.6.7 Clean the pH electrode

Maintenance interval

Clean the pH electrode when required. The pH electrode can be cleaned either when it is installed in the pH valve or when it has been removed. The pH electrode has a limited longevity and should be replaced every six months or when the response time is slow, see *Section 7.5.2 Replace the pH electrode, on page 283*. After cleaning has been performed, re-calibrate the pH monitor, see *Section 7.7.1 Calibrate the pH monitor, on page 318*.

Required material

The following materials are required:

- Syringe, 25-30 ml
- Distilled water
- 0.1 M HCl and 0.1 M NaOH

  or
- Liquid detergent

  or
- 1% pepsin solution in 0.1 M HCl

  or
- 1 M KNO_3

Cleaning agents

Clean the pH electrode using one of the following procedures:

Salt deposits

Dissolve the deposits by immersing the electrode for a five minute period in each of the following solutions:

- 0.1 M HCl
- 0.1 M NaOH
- 0.1 M HCl

Rinse the electrode tip in distilled water between each solution.

Oil or grease films

Wash the electrode tip in liquid detergent and water. If the films are known to be soluble in a particular organic solvent, wash with this solvent. Rinse the electrode tip in distilled water.

Protein deposits

Dissolve the deposit by immersing the electrode in a solution of 1% pepsin in 0.1 M HCl for five minutes, followed by thorough rinsing with distilled water.

If these procedures fail to rejuvenate the electrode, try the following procedure.

Note: *This procedure can be performed only when the pH electrode is not installed in the pH valve.*

Step	Action
1	Heat a 1 M KNO_3 solution to 60°C–80°C.
2	Place the electrode tip in the heated KNO_3 solution.
3	Allow the electrode to cool while immersed in the KNO_3 solution before re-testing.

If these steps fail to improve the electrode, replace the electrode, see *Section 7.5.2 Replace the pH electrode, on page 283*.

Clean a pH electrode installed in the pH valve

Follow the instructions below to clean a pH electrode installed in the pH valve. The calibration function is used to switch the position of the pH valve. However, no calibration is performed.

Step	Action
1	Open the ***System Control*** module. On the ***System*** menu, click ***Calibration***. *Result*: The ***Calibration*** dialog opens.

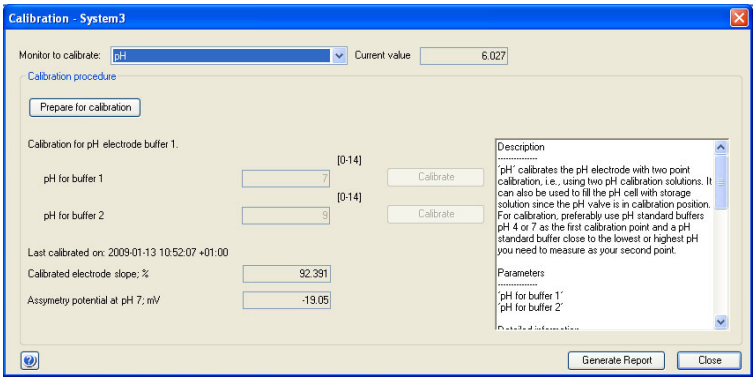

2	Set the pH monitor as the monitor to calibrate by clicking ***pH*** on the ***Monitor to calibrate*** menu.
3	Click ***Prepare for Calibration***. *Result*: The pH valve switches to the calibration position.

Step	Action
4	Fill a syringe with approximately 10 ml of chosen cleaning solution. Connect the syringe to the pH valve port **Cal**. Inject the liquid and wait for 5 minutes. Disconnect the syringe.
5	If several cleaning solutions are to be used, repeat step 4 with distilled water and then with the next solution.
6	As the last step in the cleaning procedure: • Fill a syringe with distilled water. • Connect the syringe to the pH valve port **Cal**. • Inject the water. • Disconnect the syringe.
7	Click ***Close***. *Result:* The pH valve switches back to the default position and the ***Calibration*** dialog closes. No calibration is performed.

7.6.8 Regenerate dried out pH electrode

Introduction

If the glass membrane dries out it is important to restore the hydrated glass layer.

Stage	Description
1	First try Method 1.
2	If Method 1 does not help, try Method 2.
3	If the electrode continues to be slow or not function properly, replace it with a new one.

Regeneration methods

Use one or both of the following methods to regenerate a dried out pH electrode.

Method 1

Soak the electrode in 1 M KNO_3 for 5 hours or overnight.

Method 2

Soak the electrode in 0.1 M HCl overnight. Rinse it carefully with distilled water. Soak it in 4 pH buffer for 1 hour.

7.6.9 Clean pump head check valves

Introduction

Clean the check valves when required, for example if particles like dust or salt crystals in the check valve cause irregular or low flow. The cleaning procedure is the same for the system pumps and the sample pump.

Required material

The following materials are required:

- Adjustable wrench
- 100% Methanol
- Distilled water
- Ultrasonic bath

Instruction

Follow the instructions to remove and clean the pump head check valves.

Step	Action
1	Before taking the check valve apart, always try to clean the check valves by priming the pump heads first with distilled water, then with 100% Methanol and then with distilled water again.
2	Switch off the instrument.
3	Disconnect the tubing from the pump head and disconnect the pump inlet tubing. Disconnect the tubing of the pump rinsing system.

Step	Action
4	Unscrew the purge valve by turning it counter-clockwise, and lift off the metal ring. 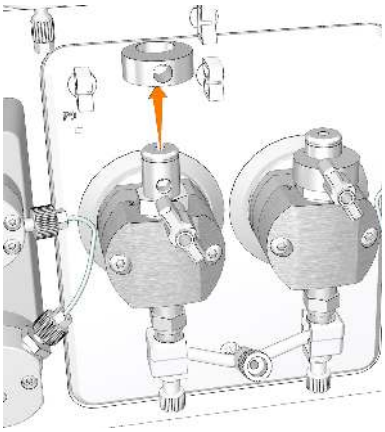
5	Unscrew the plastic nut of the upper check valve using an adjustable wrench, and gently lift off the upper check valve. 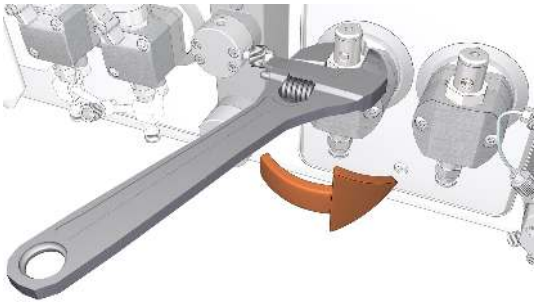
6	Unscrew the two white plastic screws located below each pump head. Pull the plastic connectors to the sides to release the inlet manifold. 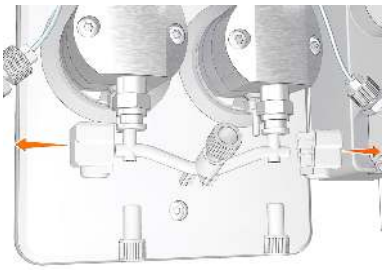

Step	Action
7	Unscrew the lower check valve using an adjustable wrench. 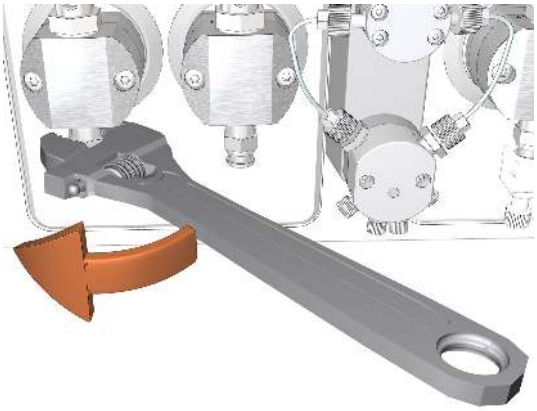
8	**WARNING** **Hazardous substances.** When using hazardous chemicals, take all suitable protective measures, such as wearing protective glasses and gloves resistant to the substances used. Follow local and/or national regulations for safe operation and maintenance of the product. Immerse the valves completely in methanol and place them in an ultrasonic bath for a few minutes. Repeat the ultrasonic bath with deionized water.
9	Refit the check valves.
10	Tighten the nut until fully finger-tight and then use the adjustable wrench to tighten a further 90 degrees.
11	Refit the inlet manifold and reconnect the tubing to the pump head.

7.6.10 Clean pump flow restrictors

Introduction

Clean the pump flow restrictors when required for example if particles like dust or salt crystals is causing blockage. The cleaning procedure is the same for the system pumps and the sample pump.

Required material

The following materials are required:

- Stop plug, 1/16” male
- Union, 1/16" female to 1/16" female
- Union, Luer female to 1/16" male
- Syringe, 25 ml
- Waste beaker

Instruction

Follow the instructions to clean the System pump A flow restrictor. Use the same procedure to clean the System pump B or the Sample pump flow restrictors.

Step	Action
1	Place the buffer bottles on the bench to avoid siphoning effects when opening the flow path.
2	Disconnect the piece of tubing marked **2A** from the flow restrictor block and connect a stop plug, 1/16” male, to the restrictor block.
3	Disconnect the pieces of tubing marked **1A1** and **1A2** from the pump outlet check valves. Place the tubing marked **1A1** in a waste beaker. Connect a union, 1/16" female to 1/16" female, to the piece of tubing marked **1A2**. Connect a union, Luer female to 1/16" male, to the other side of the union.
4	Connect a Luer syringe filled with distilled water to the union and flush it through the flow restrictor block. Be careful to avoid spillage if there is a salt blockage creating back pressure. When the flow path is free continue with next step.
5	Move the stop plug from the **2A** outlet to the **1A1** inlet in the flow restrictor block. Connect a piece of tubing from the **2A** outlet to waste.

Step	Action
6	Refill the syringe with distilled water and press gently to flush the flow path through the flow restrictor. Be careful to avoid spillage if there is a salt blockage creating back pressure. The flow restrictor itself will also create some back pressure. Continue until the flow path is free.
7	Reconnect the pieces of tubing marked **2A**, **1A1** and **1A2** and place the buffer bottles on top of the system again.

Note: *If blockage is flushed away with water, stronger cleaning solutions can then be used. Pump the cleaning solution through the pump in a standard manner and out to the Injection valve waste oulet.*

7.6.11 Wipe off excess oil from the pump head

Maintenance interval

During the first months of use it is normal that excess oil leaks out of the drain hole below the System pump. The function of the pump is not in any way affected by this.

Required material

The following materials are required:

- Cloth
- Mild cleaning agent or 20% ethanol

Instruction

Follow the instructions below to clean the System pumps externally.

Step	Action
1	Check that no run is in progress.
2	Switch off the instrument.
3	Wipe off the excess oil from the pump head with a damp cloth. Wipe off stains using a mild cleaning agent or 20% ethanol.
4	Let the pump dry completely before using the instrument.

7.6.12 Clean the Conductivity flow cell

Maintenance interval

Clean the Conductivity flow cell when required.

Required material

The following materials are required:

- Luer connector
- Waste container
- Syringe, 25 ml
- 1 M NaOH
- Distilled water

Instruction

Follow the instruction to clean the flow cell of the Conductivity monitor. The same procedure also applies to the second Conductivity monitor.

Step	Action
1	Disconnect the Fingertight connector and the piece of tubing from the top of the Conductivity monitor, and attach a Luer connector.
2	Disconnect the piece of tubing from the bottom of the Conductivity monitor, and connect a piece of waste tubing to the Conductivity monitor. Place the waste tubing in a waste container.
3	Disconnect the Conductivity monitor from the rails, or slide the Conductivity monitor to the right on the rails.

Step	Action
4	Fill a syringe with distilled water, and connect the syringe to the Luer connector.
5	Squirt distilled water through the conductivity flow cell in small amounts. Disconnect the syringe.
6	**WARNING** **Hazardous substances.** When using hazardous chemicals, take all suitable protective measures, such as wearing protective glasses and gloves resistant to the substances used. Follow local and/or national regulations for safe operation and maintenance of the product. Fill a syringe with 1 M NaOH, and connect the syringe to the Luer connector.
7	Squirt 1 M NaOH through the conductivity flow cell about five times.
8	Leave the liquid in the flow cell for at least 15 minutes.
9	Fill a syringe with distilled water. Connect the syringe to the Luer connector.
10	Inject the distilled water into the conductivity flow cell to rinse the flow cell. Disconnect the syringe.
11	Disconnect the Luer connector from the top of the conductivity flow cell, and reconnect the fingertight connector with tubing.

Note: *If the cell was very dirty and correct absolute values are important, calibrate the conductivity monitor after cleaning*

7.7 Calibration procedures

About this chapter

This section provides instructions for calibration procedures that can be performed using the ***System Control*** module in UNICORN software.

In this section

This section contains the following subsections:

Section	See page
7.7.1 Calibrate the pH monitor	318
7.7.2 Calibrate the pressure monitors	320
7.7.3 Calibrate the Conductivity Monitor	324
7.7.4 Calibrate the UV monitors	328

Open the Calibration dialog box

Open the ***System Control*** module. On the ***System*** menu, click ***Calibrate*** to open the ***Calibration*** dialog box.

7.7.1 Calibrate the pH monitor

Maintenance interval

Calibrate the pH monitor once a day, when the pH electrode has been replaced, or if the ambient temperature has changed by more than 5°C.

Required material

Use two pH calibration buffers with a difference of at least one pH unit. Preferably use a pH standard buffer, pH 4 or pH 7, as the first calibration point, and a pH standard buffer close to the lowest or highest pH you need to measure as your second point. Allow the buffers to equilibrate to ambient temperature before use.

Instruction

CAUTION

pH electrode. Handle the pH electrode with care. The glass tip may break and cause injury.

Follow the instructions to perform the calibration.

Step	Action
1	Open the ***System Control*** module. On the ***System*** menu, click ***Calibration***. *Result:* The ***Calibration*** dialog box opens.

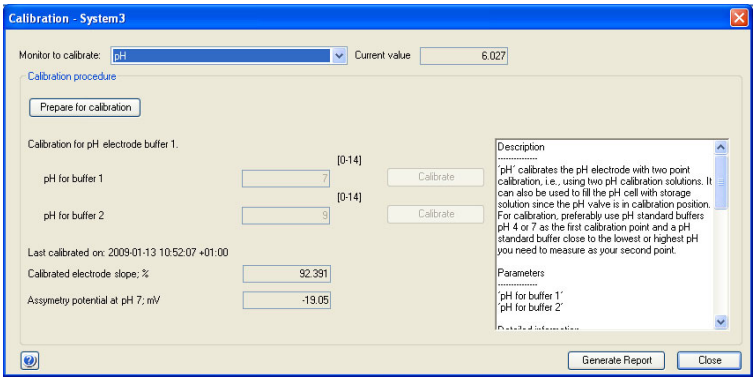

Step	Action
2	Select ***pH*** in the ***Monitor to calibrate*** list.
3	Click ***Prepare for calibration***. *Result*: The pH valve switches to the calibration position.
4	Enter the pH of the first pH standard buffer in the ***pH for buffer 1*** box.
5	Fill a syringe with approximately 10 ml of the first pH standard buffer. Connect the syringe to the Luer connector in pH valve port **Cal**, and inject the buffer.
6	When the ***Current value*** is stable, click ***Calibrate***.
7	Wash the pH flow cell by injecting water into pH valve port **Cal** using a new syringe.
8	Enter the pH of the second pH standard buffer in the ***pH for buffer 2*** box.
9	Repeat steps 5 to 6 using the second pH standard buffer. *Result:* Calibration date and time are displayed in the dialog box, and also values for ***Calibrated electrode slope*** and ***Asymmetry potential at pH 7***.
10	Is the ***Calibrated electrode slope*** ≥ 80% and the ***Asymmetry potential at pH 7*** inside the interval ±60 mV? • If Yes: Click ***Close*** to switch the pH valve back to the default position, and to close the ***Calibration*** dialog box. • If No: Clean the pH electrode, and repeat the calibration procedure. If this does not help, replace the electrode. For information about cleaning and replacing the pH electrode, see *Section 7.5.2 Replace the pH electrode, on page 283*.

7.7.2 Calibrate the pressure monitors

Maintenance interval

ÄKTA avant has four pressure monitors: system pump pressure monitor, sample pump pressure monitor, pre-column pressure monitor and post-column pressure monitor. Check the pressure monitors every week, or when the the ambient temperature has changed more than 5°C. Calibrate the monitor if the zero pressure reading is outside the range ± 0.02 to MPa.

Check the monitors

Follow the instructions to check the pressure monitors. The procedure is the same for each monitor.

Step	Action
1	Disconnect the relevant tubing from the pressure monitor to obtain zero-pressure, see table *Tubing and pressures, on page 322*.
2	Click the ***Customize*** button to open the ***Customize*** dialog box. In the ***Customize*** dialog box, under the ***Run Data Groups*** tab, select the relevant pressure to display, see table *Tubing and pressures, on page 322*. Click ***OK*** to close the ***Customize*** dialog box.
3	In the ***Run Data*** pane in the ***System Control*** module, check what pressure is displayed.
4	If the zero pressure reading is outside the range ± 0.02 MPa, calibrate the pressure monitor according to the instruction below.

Calibrate the monitors

Follow the instructions below to calibrate any of the pressure monitors.

Step	Action
1	Disconnect the relevant tubing from the pressure monitor, see table *Tubing and pressures, on page 322*.

Step	Action
2	In the ***Calibration*** dialog, in the ***Monitor to calibrate*** list, select the pressure monitor to calibrate. 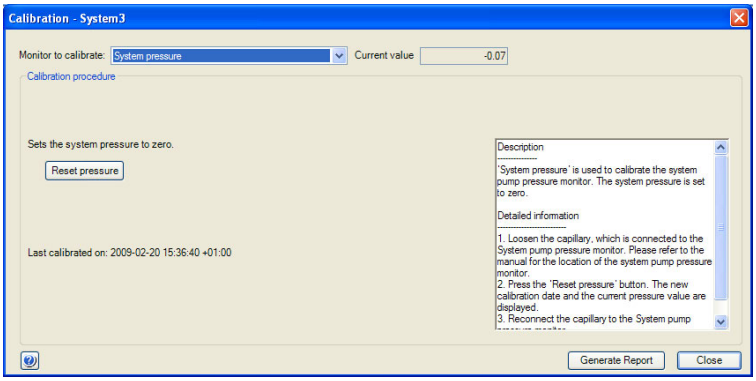
3	Click ***Reset pressure***. *Result:* The atmospheric pressure is defined as zero. Date and time of the most recent calibration, and the current pressure value are displayed.
4	Reconnect the tubing to the pressure monitor.

Tubing and pressures

The following table shows the tubing to disconnect when checking and calibrating the pressure monitors. The UNICORN names of the pressures measured by the monitors are also shown.

Pressure monitor	Tubing to disconnect	Pressure in UNICORN
System pump pressure monitor	Tubing from the System pump pressure monitor 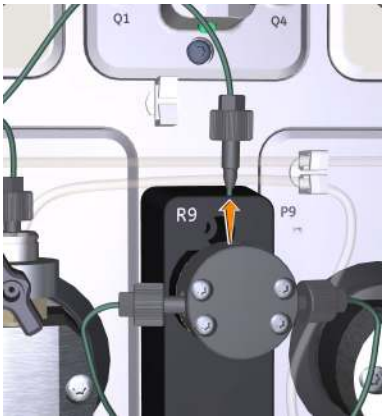	***System pressure***
Sample pump pressure monitor	Tubing from the Sample pump pressure monitor	***Sample pressure***

Pressure monitor	Tubing to disconnect	Pressure in UNICORN
Pre-column pressure monitor	Tubing to Column valve **V9-C** or **V9H-C** port **In**	***PreC pressure***
Post-column pressure monitor	Tubing to Column valve **V9-C** or **V9H-C** port **Out** 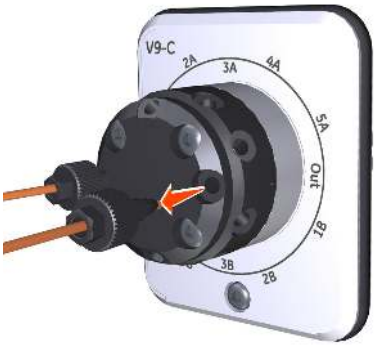	***PostC pressure***

7.7.3 Calibrate the Conductivity Monitor

Introduction

Two types of calibrations can be performed:

- ***Conductivity monitor - factory calibration***: Restores the conductivity cell constant to the factory default value.
- ***Conductivity monitor - user calibration***: Calibrates the conductivity cell constant.

Maintenance interval

Recommended maintenance intervals for the two types of calibrations:

- ***Conductivity monitor - factory calibration***: Perform calibration to override an incorrect user calibration.
- ***Conductivity monitor - user calibration:*** The conductivity cell is factory calibrated, and should not require recalibration under normal usage. Perform calibration when the signal is unstable or you suspect that it is incorrect. It is also recommended to recalibrate the Conductivity monitor after cleaning.

Conductivity Monitor - factory calibration

Follow the instruction to restore the conductivity cell constant to the factory default value.

Step	Action
1	In the ***Calibration*** dialog, in the ***Monitor to calibrate*** list, click ***Conductivity monitor - factory calibration***. *Result:* The time for the new calibration and the current value are displayed.
2	Click ***Restore***. *Result:* The conductivity cell constant is restored to the factory default value. The conductivity cell constant is written on the packaging of the Conductivity monitor.

Conductivity Monitor - user calibration

Follow the instruction to calibrate the conductivity flow cell constant.

Step	Action
1	Make sure that the instrument has been switched on for at least one hour.
2	In the ***System Control*** module, on the ***System*** menu, click ***Settings***. *Result:* The ***System Settings*** dialog box opens.
3	In the ***System Settings*** dialog, select ***Conductivity:Cond temp compensation***. Set the ***Compensation factor*** to 0, and click ***OK***.
4	In the ***Calibration*** dialog box, in the ***Monitor to calibrate*** list, click ***Conductivity monitor - user calibration***.
5	Prepare at least 25 ml of calibration solution. Use either a 0.1 M KCl certified conductivity standard solution, or accurately prepare your own 1.00 M NaCl solution.
6	Immerse a piece of sample inlet tubing, for example **S1**, in the calibration solution.
7	Open the ***System Control*** module. On the ***Manual*** menu, click ***Execute Manual Instructions***. *Result*: The ***Manual instructions*** dialog box opens.
8	In the ***Manual instructions*** dialog box: • Select ***Flow path:Injection valve***, in the ***Position*** list, click ***Direct inject***. Click ***Insert***. • Select ***Flow path:Column position***, in the ***Position*** list, click ***By-pass***. Click ***Insert***. • Select ***Flow path:pH valve*** and set the ***Restrictor*** to ***In-line*** and the ***pH*** to ***Off-line***. Click ***Insert***. • Select ***Flow path:Sample inlet***, select a position in the ***Position*** list (in this example ***S1***). Click ***Insert***. • Select ***Pumps and Pressures:Sample flow*** and enter 1.0 to ml/min in the ***Flow rate*** box. Click ***Insert***. • Click ***Execute***. *Result:* Calibration solution is pumped through the system by the Sample pump.
9	Pump in at least 25 ml of the calibration solution, and wait until the conductivity signal is stable.

Step	Action
10	In the ***Run Data*** pane of ***System Control***, read the current ***Cond temp***. ***Tip:*** *If **Cond temp** is not showing, click the **Customize** icon. In the **Customize** dialog box, under the **Run Data Groups** tab, select to view **Cond temp**.*
11	In the ***Calibration*** dialog box, enter the theoretical conductivity value at the current conductivity temperature in the ***Enter theoretical conductivity value*** input field. • If a certified conductivity standard solution is used, use the supplied theoretical conductivity value. • If a manually prepared 1.00 M NaCl calibration solution is used, see the graph for conductivity value at the current temperature *Graph for conductivity value, on page 327*.
12	In the ***Calibration*** dialog box, click ***Calibrate***. *Result*: The new conductivity cell constant is displayed in the ***Conductivity cell 1 constant/cm*** box. The new constant should normally be 40 ± 10 cm^{-1}. The date and time for the calibration are also displayed.
13	In the ***System Control*** toolbar, click the ***End*** icon to end the run.
14	In the ***System Settings*** dialog box, select ***Conductivity:Cond temp compensation*** and set the ***Compensation factor*** back to desired value, default 2.1%. Click ***OK.***

Graph for conductivity value

The graph below shows the conductivity value at the current temperature when 1.00 M NaCl calibration solution is used.

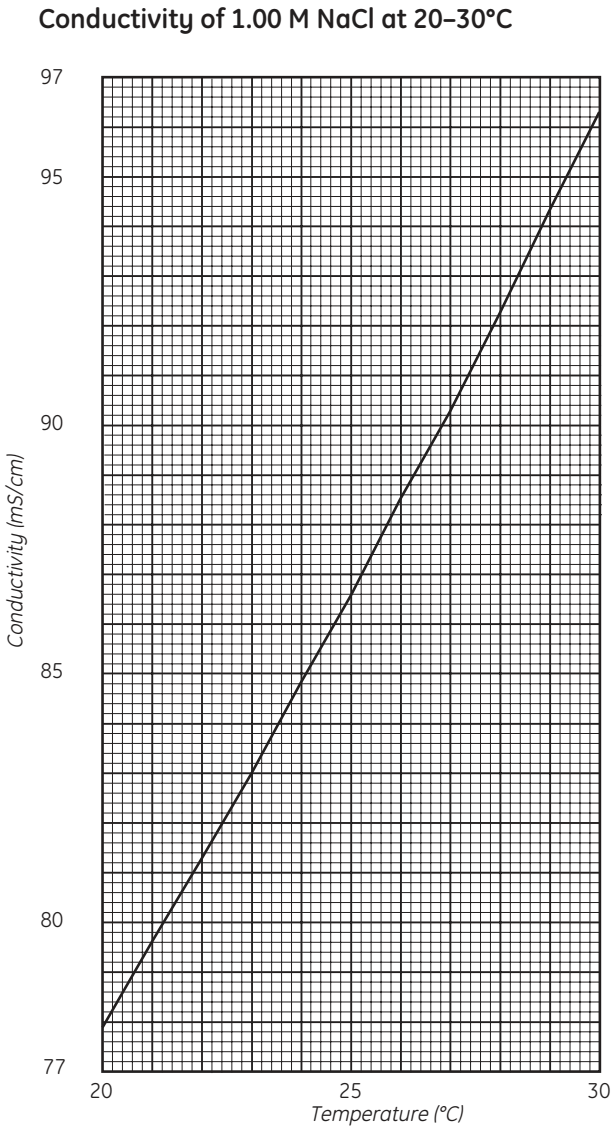

7.7.4 Calibrate the UV monitors

Automatic wavelength calibration of the UV Monitor

The wavelength is automatically calibrated every time the instrument is switched on. If the instrument has been switched on for a couple of days, and the ambient temperature and/or the humidity has changed, restart the instrument using the power switch to calibrate the UV Monitor **U9-M**.

Calibration of the second UV monitor flow cell length

The cell path length of the second UV Monitor **U9-L** might differ from the nominal length, which leads to incorrect results in the calculation of protein concentration in the eluate. To achive normalized absorbance, the path length of the second UV flow cell must be calibrated.

Note: *The flow cell path length must be registered or updated in UNICORN, when the flow cell is replaced.*

Equipment needed

To perform the calibration, a calibration kit containing test solutions, syringes and accessories is needed. A specified kit is available for each cell length.

If using a UV flow cell with the theoretical path length...	Then use calibration kit...
2 mm	UV-900 2 mm calibration kit (Product Code 18-6324-02)
5 mm	UV-900 5 mm calibration kit (Product Code 18-6324-04)

To calculate the real path length of the UV flow cell, use the following software:

- UV-900 cell calibration Excel-file (Product Code 18-6324-06)

Prepare for calibration

Follow the instructions to prepare for the calibration of the UV monitor U9-L.

Step	Action
1	Ensure that the flow restrictor is inline in the flow path after the UV flow cell.
2	Mount the union Luer female/1/16" male, included in the test kit, in the upper inlet of the UV flow cell.
3	Open the ***UV-900 cell calibration*** Excel-file.
4	The solution bottles are labelled with the concentration value and the reference absorbance value for each solution. Enter the concentrations of the solutions in ascending order into the column ***UV Test kit Concentration (mg/l)***. Enter the corresponding absorbance values into the column ***UV Test kit Absorbance (AU/cm)***.

Perform the calibration

Follow the instructions to calibrate the second UV Monitor **U9-L**.

Step	Action
1	Open the ***System Control*** module. On the ***Manual*** menu, click ***Execute Manual Instructions***. *Result*: The ***Manual instructions*** dialog box opens. In the ***Manual Instructions*** dialog box: • Select ***Pumps:System flow*** and set the ***Flow rate*** to 0.0 ml/min. • Click ***Execute***. *Result:* The absorbance can now be monitored.
2	Fill one of the supplied syringes with 1.5-2 ml of the first solution (0 mg/l). Ensure that there are no air bubbles in the syringe.

Step	Action
3	Fit the syringe in the union Luer connector and inject the solution. DO NOT remove the syringe.

Note:

Air trapped in the UV cell causes inaccurate measurements. To avoid introducing air into the UV cell, gently fill the union Luer up to the edge with test solution that is to be introduced, using the syringe. Then insert the syringe into the union Luer.

4 Wait until the monitored absorbance value has stabilized.

5 In the ***Manual Instructions*** dialog box:

1 Select ***Monitors:Auto zero UV 2nd***

2 Click ***Insert***, then click ***Execute***

Result: The UV absorbance is set to zero.

6 Remove the syringe.

7 Repeat the injections with the remaining four test solutions in increasing concentration order. Use a new syringe for each solution.

8 After each injection, wait for a stable absorbance value. Note the measured absorbance values for each solution.

Step	Action
9	Enter the measured absorbance values into the table in the column ***UV-900 Absorbance (AU)*** in the ***UV-900 cell calibration*** Excel-file. ***Note:*** *The values should be converted from mAU to AU.*
10	When all absorbance values have been entered into the table, the real UV flow cell path length is shown at the bottom of the table. ***Note:*** *The regression coefficient R2 should be larger than 0.999. If this is not the case, one or more measured values are faulty.*

Update the cell path length

Follow the instructions to define the ***UV 2nd cell path length***. The flow cell path length should be updated when the flow cell has been replaced or calibrated.

Step	Action
1	In the ***System Control*** module, on the ***System*** menu, click ***Calibration***.
2	In the ***Calibration*** dialog box, click ***UV 2nd cell path length*** in the ***Monitor to calibrate*** list.
3	Enter the nominal flow cell path length in the ***Nominal length*** input field and click ***Set***.
4	• If a calibration has been performed: enter the calculated flow cell path length, obtained in the calibration procedure, in the ***Real length*** input field and click ***Set***. • If no calibration has been performed: enter the nominal flow cell path length in the ***Real length*** input field and click ***Set***. *Result:* The UV flow cell path length is updated.

7.8 Replacement procedures

About this section

This section gives instructions for the replacement procedures to be performed by the user of ÄKTA avant.

WARNING

Disconnect power. Always disconnect power from the instrument before replacing any component on the instrument, unless stated otherwise in the user documentation.

In this section

This section contains the following subsections:

Section	See page
7.8.1 Replace tubing and connectors	333
7.8.2 Replace the Mixer	335
7.8.3 Replace the O-ring inside the Mixer	337
7.8.4 Replace the UV monitor U9-M flow cell	339
7.8.5 Replace UV monitor U9-L flow cell	342
7.8.6 Replace Flow restrictor	344
7.8.7 Replace the inlet filters	345
7.8.8 Replace pump head check valves	346
7.8.9 Replace pump rinsing system tubing	349
7.8.10 Replace a valve module	351
7.8.11 Replace pump pistons, piston seals, O-rings and rinse membranes	354

7.8.1 Replace tubing and connectors

Maintenance interval

Replace tubing and connectors when required, for example when a tubing has clogged or has been bent so that the flow is stopped.

Required material

The following materials are required:

- Tubing and connectors
- Tubing cutter
- Fingertight wrench

Instruction

Follow the instruction below to replace tubing and connectors.

Step	Action
1	Make sure that no run is in progress on the instrument.
2	Unscrew the connectors, and disconnect the tubing.
3	If the tubing has labels, remove the labels to be used with the new tubing later. Discard the tubing and connectors.

Step	Action
4	Cut the new tubing to the same length as the old tubing. Use a tubing cutter to get a straight angle cut.

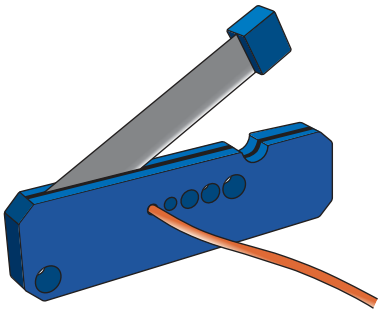

CAUTION

Cut injuries. The tubing cutter is very sharp and must be handled with care to avoid injuries.

Note:

When replacing system tubing, use the original inner diameter and length to ensure that the correct delay volumes are maintained. Inlet and outlet tubing may be shortened if required.

5 Put the old labels on the new tubing.

6 Mount the connectors on the tubing.

For fingertight connectors:

- Slide the connector onto the tubing.

For tubing connectors 1/8":

- Slide the connector onto the tubing.
- Slide the ferrule onto the tubing with the thick end towards the end of the tubing.

7 Insert the tubing with connector into the port. Make sure to insert the tubing all the way into the bottom of the port.

8 Tighten the connector fully. For areas difficult to access, use the fingertight wrench included in the accessory kit.

7.8.2 Replace the Mixer

Maintenance interval

Replace the Mixer when a different Mixer chamber is desired, or when the Mixer is damaged.

Required material

The following is required:

- Mixer

Instruction

Follow the instruction to change the Mixer.

Step	Action
1	Disconnect the tubing from the top and bottom of the Mixer.

Step	Action
2	Pull the Mixer away from the instrument.
3	Attach the new Mixer.
4	Reconnect the tubing to the top and bottom of the new Mixer.
5	Pump out the air inside the new mixer through the Injection valve waste position.

7.8.3 Replace the O-ring inside the Mixer

Maintenance interval

Replace the O-ring inside the Mixer if it is damaged, or if it is being replaced with an high resistant O-ring for RPC runs.

Required material

One of the following O-rings are required:

- O-ring 13.1 x 1.6 mm (for Mixer chambers 0.6, 1.4, and 5 ml)
- O-ring 22.1 × 1.6 mm (for Mixer chamber 15 ml)
- O-ring 13,1 x 1.6 mm high resistant (product code 29-0113-26)

Instruction

Follow the instruction to replace the O-ring inside the Mixer.

Tip: *Use a forceps and gloves during the replacement procedure to avoid contaminating the Mixer components.*

Step	Action
1	Loosen the top section of the Mixer.
2	Unscrew the top section of the Mixer and pull apart the Mixer in two halves.

Step	Action
3	Remove the outer locking O-ring from the top section.
4	Lift up the top section of the Mixer and pull away the old O-ring inside.
5	Wet the new O-ring with 20% ethanol and fit it in position. Make sure that the inline filter is still in position.
6	Reassemble the Mixer components and, while holding the Mixer upright, screw the top section back onto the Mixer.

7.8.4 Replace the UV monitor U9-M flow cell

Maintenance interval

Replace the UV flow cell when it is desired to use a flow cell with a different path length, or if the cell is damaged. Clean the optical fiber connectors if they have accidentally been touched.

Required material

The following materials are required:

For replacement of flow cell

- UV flow cell

For cleaning of the optical fiber connectors

- Lens paper
- Isopropanol

Replace the flow cell

CAUTION

Hazardous chemicals or biological agents in UV flow cell. Make sure that the entire flow cell has been flushed thoroughly with bacteriostatic solution (e.g., NaOH) and distilled water, before service and maintenance.

Follow the instruction to replace the UV flow cell.

Step	Action
1	Switch off the instrument.
2	Disconnect the tubing from the UV flow cell.

Step	Action
3	Push the latch on the UV detector to disconnect the detector.

Note:

While the UV detector is disconnected, the UV lamp becomes inoperable so no UV light can be emitted from the instrument.

4 Pull off the detector and the flow cell from the monochromator. Be careful not to damage the UV flow cell.

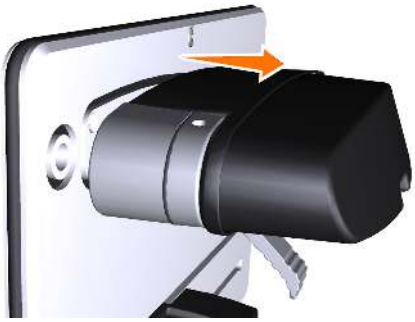

Note:

Make sure that the flow cell does not come into contact with any liquid, and that no liquid enters the UV detector or monochromator.

Note:

While the UV detector is disconnected, protect the fiber connectors from dust or other impurities by mounting the rubber protective caps onto them.

Note:

Do not touch the optical fiber connectors as this will result in poor monitor performance. If you accidentally touch the optical fiber connectors, clean them according to *Clean the optical fiber connectors, on page 341*.

5 Pull off the UV flow cell from the detector.

Step	Action
6	Pull off the black protective caps from the new UV flow cell, and connect the new UV flow cell to the detector.
7	Connect the detector, with the new flow cell connected, to the monochromator. Pull the latch upwards to fasten the detector.
8	Connect the tubing to the new flow cell.
9	Switch on the instrument. *Result:* The flow cell path length is automatically recognized by the monitor when a new flow cell is connected.

Clean the optical fiber connectors

Follow the instruction to clean the optical fiber connectors.

WARNING

Hazardous substances. When using hazardous chemicals, take all suitable protective measures, such as wearing protective glasses and gloves resistant to the substances used. Follow local and/or national regulations for safe operation and maintenance of the product.

Step	Action
1	Wipe the optical fiber connectors with isopropanol on lens paper.
2	Wipe the optical fiber connectors dry with lens paper.

7.8.5 Replace UV monitor U9-L flow cell

Maintenance interval

Replace the UV flow cell when it is desired to use a flow cell with a different path length, or if the cell is damaged.

Required material

- UV flow cell

Replace the flow cell

CAUTION

Hazardous chemicals or biological agents in UV flow cell. Make sure that the entire flow cell has been flushed thoroughly with bacteriostatic solution (e.g., NaOH) and distilled water, before service and maintenance.

Follow the instruction to replace the UV flow cell.

Step	Action
1	Switch off the instrument.
2	Disconnect the tubing from the UV flow cell.

Step	Action
3	Unscrew the knurled wheel at the bottom of the UV monitor. Press the wheel upwards to release the flow cell.

4	Pull the flow cell upwards out of the monitor. Hold the flow cell by the top part with the O-ring: do not touch the optical surfaces of the flow cell.

Note:

Make sure that the flow cell does not come into contact with any liquid, and that no liquid enters the monitor.

5	Insert a new flow cell into the monitor.
6	Tighten the knurled wheel firmly.
7	Connect the tubing to the new flow cell.
8	Switch on the instrument and log on to UNICORN.
9	Update the UV flow cell path length in the ***Calibrate*** dialog box, in the ***System Control*** module.

7.8.6 Replace Flow restrictor

Maintenance interval

Replace the Flow restrictor when required, for example when the back pressure of the Flow restrictor is outside the range 0.2 ± 0.05 MPa.

Required material

The following material is required:

- Flow restrictor **FR-902**

Instruction

Follow the instruction to replace the Flow restrictor.

Step	Action
1	Disconnect the tubing connected from the used Flow restrictor, and discard the used Flow restrictor.
2	Connect the tubing to the new Flow restrictor. Make sure that the Flow restrictor connector marked **IN** is connected to the pH valve port **ToR** (To Restrictor), and that the Flow restrictor connector marked **OUT** is connected to the pH valve port **FrR** (From Restrictor).
3	Check the back-pressure of the new Flow restrictor, see *Section 7.4 Monthly maintenance, on page 275*.

7.8.7 Replace the inlet filters

Maintenance interval

Replace the inlet filter when required, for example when the filters are clogged.

Required material

The following material is required:

- Inlet filter set

Instruction

Follow the instruction to replace an inlet filter and a support net.

Step	Action
1	Pull off the inlet filter and the support net from the inlet filter holder.
2	Fit the new support net and inlet filter, and press the filter into position.

7.8.8 Replace pump head check valves

Maintenance interval

Replace a check valve when required, for example if the check valve is damaged or clogged.

Required material

The following materials are required:

- Check valve kit
- Adjustable wrench

Instruction

NOTICE

Handle the check valves with care when they have been removed from the pump heads, to prevent loss of any internal components.

Follow the instruction to replace the check valves of a pump.

Step	Action
1	Disconnect the tubing from the pump head and disconnect the pump inlet tubing.

Step	Action
2	Unscrew the purge valve by turning it counter-clockwise, and lift off the metal ring. 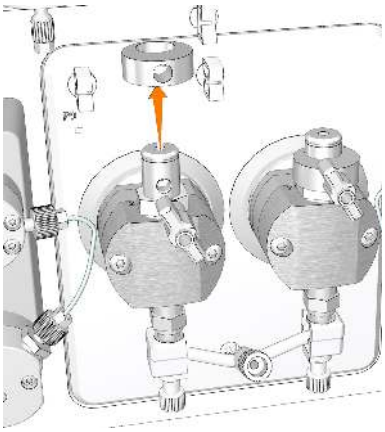
3	Unscrew the plastic nut of the upper check valve using an adjustable wrench, and gently lift off the upper check valve. 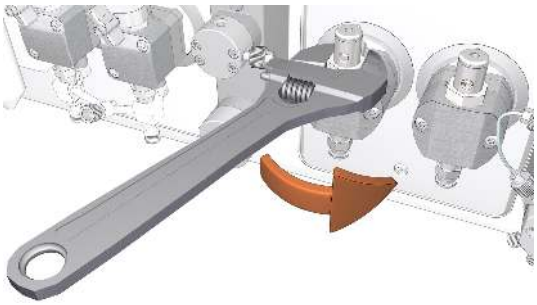
4	Replace the upper check valve with a new one.
5	Tighten the nut until fully finger-tight and then use the adjustable wrench to tighten a further 180 degrees.
6	Place the new metal ring onto the new upper check valve, and screw the new purge valve.

Step	Action
7	Unscrew the two white plastic screws located below each pump head. Pull the plastic connectors to the sides to release the inlet manifold. 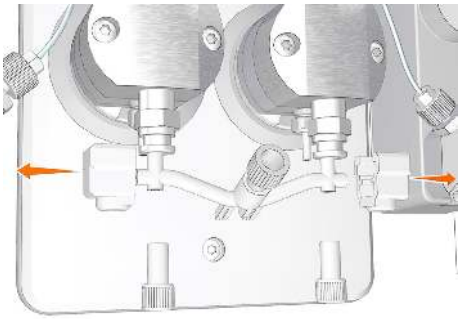
8	Unscrew the lower check valve using an adjustable wrench. 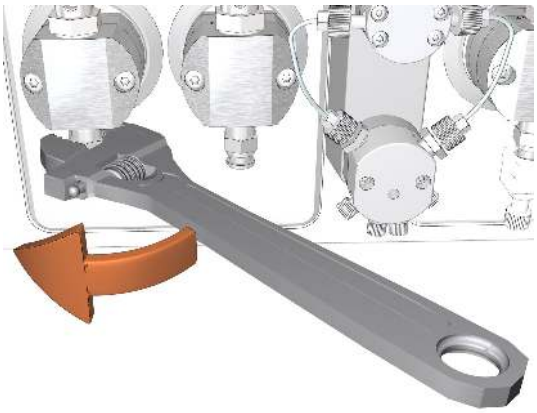
9	Replace the lower check valve with a new one.
10	Tighten the nut until fully finger-tight and then use the adjustable wrench to tighten a further 180 degrees.
11	Refit the inlet manifold and reconnect the tubing to the pump head.

7.8.9 Replace pump rinsing system tubing

Maintenance interval

Replace the pump rinsing system tubing when required, for example if the tubing is clogged or damaged.

Required material

The following material is required:

- Rinsing system tubing

Illustration of the pump piston rinsing systems

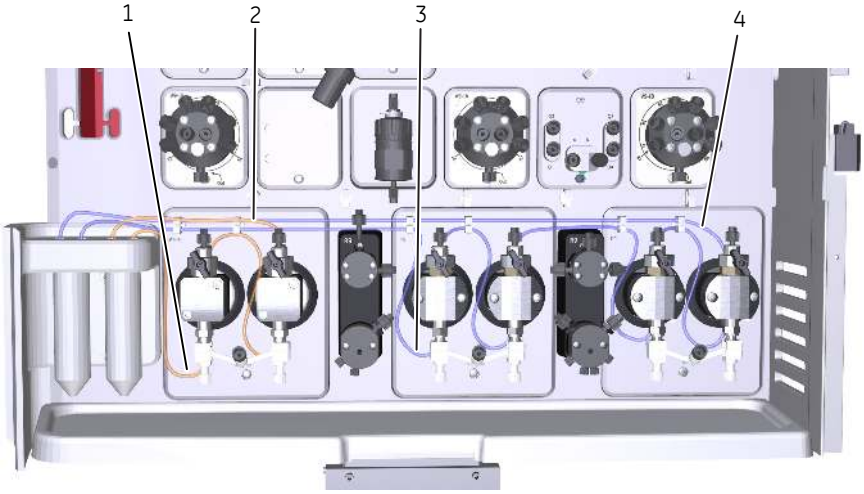

Part	Description
1	Inlet tubing to the sample pump piston rinsing system
2	Outlet tubing from the sample pump piston rinsing system
3	Inlet tubing to the system pump piston rinsing system
4	Outlet tubing from the system pump piston rinsing system

Connect new tubing

Step	Action
1	Disconnect the used tubing.
2	Cut the new tubing to desired length.
3	Connect the new tubing according to the previous illustration.
4	Fit all pieces of tubing into the tubing holders on the pump modules.

Prime the rinsing systems

Before usage, prime the pump rinsing system tubing. Refer to *Section 7.3.1 Change pump rinsing solution, on page 270* for detailed instructions.

7.8.10 Replace a valve module

Maintenance interval

Replace the valve modules when required, for example if a valve module is damaged.

Note: *For replacement of the Quaternary valve, please contact service.*

Instruction

Follow the instruction below to replace a valve module.

WARNING

Disconnect power. Always disconnect power from the instrument before replacing any component on the instrument, unless stated otherwise in the user documentation.

Step	Action
1	Disconnect power from the instrument by switching off the **Power** switch. The **Power** switch is located on the left hand side of the instrument.
2	Loosen the module with a Torx T20 screwdriver.

Step	Action
3	Remove the valve module.
4	Disconnect the cable and secure it in the slit.
5	Connect the cable to the new valve module.

Step	Action
6	Insert the valve module.
7	Fasten it with a Torx screwdriver.

7.8.11 Replace pump pistons, piston seals, O-rings and rinse membranes

Introduction

Pump pistons, piston seals, O-rings and rinse membranes are pump parts that can be replaced by the user. Replacing these parts require special attention not to damage the pumps. See *ÄKTA avant Operating Instructions* for instructions on replacement procedures.

NOTICE

- Do not disassemble the pump head unless there is good reason to believe that there is an internal leakage. A sign of leakage is increasing pump rinsing solution volume. Always make sure that sufficient spare components are available before attempting to replace a spare part.
- **Replacing spare parts**. Read the instructions carefully. For example, some individual parts of the pump head can be assembled incorrectly. Check the orientation of each part before continuing with the next instruction.

8 Troubleshooting

About this chapter

This chapter describes troubleshooting and corrective actions for ÄKTA avant.

In this chapter

This chapter contains the following sections:

Section	See page
8.1 Introduction to troubleshooting	356
8.2 Troubleshooting: General Checklist	358
8.3 Troubleshooting: Monitors	360
8.4 Troubleshooting: Valves	378
8.5 Troubleshooting: Fraction collector	381
8.6 Troubleshooting: Pumps	394
8.7 Troubleshooting: Other components	401
8.8 Troubleshooting: Instrument communication	410
8.9 Error codes	412

8.1 Introduction to troubleshooting

Introduction

This section describes troubleshooting procedures for ÄKTA avant and how to generate a System error report for service purposes. Subsequent sections in this chapter present general troubleshooting checklists, module-specific problems and corrective actions.

Troubleshoot the software

For software related troubleshooting, see the following table and the list of literature below:

Problem	Possible cause and action
Text in the *Process Picture* pane in the *System control* module looks strange	**The operating system of the computer does not have the text font Calibri True Type installed. For example, Windows XP does not include this font by default.** Install the font Calibri True Type or switch to an operating system that includes the font.

- *UNICORN Method Manual*,
- *UNICORN Evaluation Manual* and
- *UNICORN Administration and Technical Manual*

Troubleshooting procedure

To troubleshoot ÄKTA avant:

Step	Action
1	Always start by checking the General checklist. See *Section 8.2 Troubleshooting: General Checklist, on page 358*.
2	In this document, search for solutions in the section corresponding to the problem.
3	Make the recommended corrective actions.
4	If problems remain after corrective actions, generate a System error report and contact your local GE representative.

Generate a System error report

A System error report can be generated during a troubleshooting case with information about the problem and can also include methods, logs, and results. The report can then be sent to Service for action.

To generate a System error report for information to Service:

Step	Action
1	In the ***System Control*** module, on the ***System*** menu, click ***Create System Error Report***. *Result:* The first page of a wizard is displayed.
2	• Click ***Next*** and start to enter information about the problem, click ***Next.*** • Choose to enclose methods, logs or result files. • Select location for the report and click **Finish** to generate the report. The filename of the zip file will be `Report_YYYYMMDD.zip` and the default folder location is: `C:Program Files\GE Healthcare\UNICORN`.
3	E-mail the report to GE Service department.

8.2 Troubleshooting: General Checklist

Introduction

Check the items in the following topics before starting more in-depth troubleshooting work.

System checks

- Is the correct system selected in UNICORN ***System Control***? For more details, see *Section 5.3 Start UNICORN and connect to the system, on page 160*.
- Are the fans blowing at the back and at the right side of the system?

Monitor checks

- Is the UV monitor set to the correct wavelength? Check the wavelengths that are used in the method. For the predefined methods the wavelengths are set in the ***Method Settings*** phase. For more details, see UNICORN Method Manual.
- Is the air sensor sensitivity set to normal in UNICORN ***System Settings*** to avoid unnecessary stops due to minor air bubbles? See *Air sensor sensitivity, on page 63*.

Instrument communication

- Have Node IDs been set correctly for all instrument modules? To check and change Node IDs, see *Section 9.15 Check and change the Node ID of a module, on page 510*.

Flow path checks

- Is all tubing connected correctly? See *Section 9.3 Tubing and connectors, on page 429* and *Section 5.2 Prepare the flow path, on page 155*.
- Is there leakage at any of the connections?
- Is any tubing folded or twisted?
- Is the inlet tubing correctly immersed in the buffer solution, beneath the liquid surface but not too close to the flask bottom?

- Do the cassettes in the fraction collector correspond to those selected in the method? For more details, see *Section 5.8.1 Prepare the built-in fraction collector, on page 201*.
- Is there a risk that the number of wells in the deep well plate will not be sufficient for the run? If this is the case, make sure that ***Last tube filled*** action is set to an appropriate action when creating the method (otherwise, the run will be paused). For more details, see *Online Help* for the relevant method phase.
- Have the Fraction collector F9-R and the built-in fraction collector been correctly prepared? For more details, see relevant sections in *Section 5.8.1 Prepare the built-in fraction collector, on page 201* and *Section 4.9 Fraction collector F9-R, on page 128*.
- Are the inlet and inline filters clean or are they generating a back pressure higher than normal? If this is the case, change the inline and inlet filters. For more details, see *Section 7.8.7 Replace the inlet filters, on page 345* and *Section 7.3.2 Replace the inline filter, on page 272*.
- Does the positioning of the columns correspond to the selections made in the method? See *Section 5.5 Connect a column, on page 180*.

Purification checks

- Have all columns been cleaned and prepared according to the column recommendations?
- Have the samples been adjusted to binding buffer conditions?
- Have the samples been clarified by centrifugation and/or filtration prior to sample loading?
- Are the correct buffers used for the chosen columns and proteins?
- Check buffers for precipitations. Adjust to room temperature.
- Are the chosen columns suitable for the chosen target proteins?
- Do the buffers have correct pH? The pH of some buffers changes with the temperature.
- Are the UV-wavelengths used by the method appropriate with respect to used buffers and proteins? For more details see GE Method Handbooks.

8.3 Troubleshooting: Monitors

In this section

- UV monitor and UV detector
- Conductivity monitor
- pH monitor and pH valve
- Pressure monitors

UV monitor U9-M and UV detector unit

Problem	Possible cause and action
The UV module is not found by the instrument	• **Communication problem** Contact Service. • **The cable between the UV module and the ICU is not connected** Remove the UV module and make sure that the cable is connected. • **Wrong Node ID** Check the module´s Node ID. If necessary, change the Node ID. See *Section 9.15 Check and change the Node ID of a module, on page 510*.

Problem	Possible cause and action
Too low UV lamp intensity	• **The detector is not correctly fitted** Check that the detector is fitted correctly. See *Section 7.8.4 Replace the UV monitor U9-M flow cell, on page 339* . If this error is recurrent, contact Service. • **Unclean optical fiber connectors** Clean the connectors. See *Section 7.8.4 Replace the UV monitor U9-M flow cell, on page 339*. • **Dirt on optical sensors in detector** Remove visible dirt on detector photo diodes. Use lint free lens paper winded around a thin wood splinter (e.g a match or toothpick). Clean the sensors with Isopropanol through the small hole of the metal plate which covers the sensors. Dry the sensors with clean and dry lint free lens paper. • **Worn-out or broken lamp** Contact Service.
No light transmission through the UV cell	• **Wrong wavelength for current buffer** Change wavelength or buffer. • **Dirt in the UV flow cell** Clean the UV cell. See *Section 7.5.1 Clean the UV flow cell, on page 280*. • **Unclean optical fiber connectors** Clean the connectors. See *Section 7.8.4 Replace the UV monitor U9-M flow cell, on page 339*. • **Broken UV flow cell** Replace UV flow cell. See *Section 7.8.4 Replace the UV monitor U9-M flow cell, on page 339*.
Autozero out of accepted range	• **Wrong wavelength for current buffer** Change wavelength or buffer. • **Unclean optical fiber connectors** Clean the connectors. See *Section 7.8.4 Replace the UV monitor U9-M flow cell, on page 339*.

Problem	Possible cause and action
The internal temperature of the UV monitor is too high	• **The air intake on the rear or on the left side of the instrument is covered** Make sure that none of the air intakes on the instrument are covered. • **Hot surroundings** Decrease the room temperature. Maximum operating temperature is 35°C. • **Hardware error** Switch off the instrument and wait until the temperature has decreased. Restart the instrument. If this error is recurrent, generate a System error report and contact Service.
UV cell path length unreadable	• **No UV flow cell is attached** Attach UV cell. See *Section 7.8.4 Replace the UV monitor U9-M flow cell, on page 339*. • **UV flow cell is not correctly installed.** Verify that the UV cell is correctly installed. See *Section 7.8.4 Replace the UV monitor U9-M flow cell, on page 339* • **The UV flow cell is broken** Replace the cell. See *Section 7.8.4 Replace the UV monitor U9-M flow cell, on page 339*.

Problem	Possible cause and action
Ghost peaks	• **Air in the UV flow cell** Use the Flow restrictor. Use the pH valve instruction to manually set the Flow restrictor inline (***Flow path:pH valve:Restrictor in-line***), or select the Flow restrictor in the ***Method Settings*** phase of a method. Remove the air by flushing the cell with water or buffer. If persistent, clean the UV cell. See *Section 7.5.1 Clean the UV flow cell, on page 280*. • **Air in buffers** De-gas if necessary. • **Dirt in the UV flow cell** Clean the UV cell. See *Section 7.5.1 Clean the UV flow cell, on page 280*. • **Dirt in the flow path** Clean the system in accordance to *Section 7.6.2 Perform System CIP, on page 286*. Clean the column in accordance to *Section 7.6.3 Perform Column CIP, on page 294*.

Problem	Possible cause and action
Baseline drift or noisy signal	• **Flow restrictor in off-line position** Use the Flow restrictor. Use the pH valve instruction to manually set the Flow restrictor inline (***Flow path:pH valve:Restrictor in-line***), or select the Flow restrictor in the ***Method Settings*** phase of a method. • **Air in the UV flow cell** Use the Flow restrictor. Remove the air by flushing the cell with water or buffer. If persistent, clean the UV cell. See *Section 7.5.1 Clean the UV flow cell, on page 280*. • **Air in buffers** De-gas if necessary. • Make sure that both the instrument and the buffers have reached the ambient temperature. • **Impure buffers** Check if the signal is noisy with water. • **Unclean optical fiber connectors** Clean the connectors. See *Section 7.8.4 Replace the UV monitor U9-M flow cell, on page 339*. • **Dirt in the UV flow cell** Perform a System CIP. See *Section 7.6.2 Perform System CIP, on page 286*. If necessary, manually clean the UV cell. See *Section 7.5.1 Clean the UV flow cell, on page 280*. • **Wrong type of UV cell is used** If a UV cell with 2 mm path length is to be used, use only cells marked **U9-2**.

Problem	Possible cause and action
Unstable signal	• **Bad pump function** Check that the pump is operating properly. See *Examples of pump pressure curves, on page 397* for example of pump pressure curves. • **Poor mixing function** Check the mixer chamber size and change the chamber if necessary. See *Select Mixer chamber, on page 155*. Check the function of the mixer. Place a stirrer bar in the palm of your hand. Hold the hand above the mixer. The stirrer should move when the mixer is activated. Check that the mixer chamber is free from solids. To open the mixer, see *Section 7.3.2 Replace the inline filter, on page 272*.
The UV curve shows a gradient that is inverted compared to the expected gradient	• **Large difference in refractive index between buffer A and buffer B** Due to light spreading effects in the UV cell, the buffer with the highest UV absorption shows the lowest UV absorption in the chromatogram, and the buffer with the lowest UV absorption shows the highest UV absorption. This can occur if there is a large difference in refractive index between buffer A and buffer B and the UV is run at high sensitivity.

UV monitor U9-L

Problem	Possible cause and action
Autozero out of accepted range	• **Wrong UV flow cell for current buffer** Change to a shorter UV flow cell or change buffer. • **The UV flow cell is not correctly installed** Check that the UV flow cell is fitted correctly, see *Section 7.8.5 Replace UV monitor U9-L flow cell, on page 342*. • **Broken UV flow cell** Replace the cell, see *Section 7.8.5 Replace UV monitor U9-L flow cell, on page 342*.

Problem	Possible cause and action
The internal temperature of the UV monitor is too high	• **The air intake on the rear or on the right side of the instrument is covered** Make sure that none of the air intakes on the instrument are covered. • **Hot surroundings** Decrease the room temperature. Maximum operating temperature is 35°C. • **Hardware error** Switch off the instrument and wait until the temperature has decreased. Restart the instrument. If this error is recurrent, generate a System error report and contact Service.
Maximum absorbance that can be measured by the detector is reached	• **Wrong UV flow cell for current buffer** Change to a shorter UV flow cell or change buffer. • **The UV flow cell is not correctly installed** Check that the UV flow cell is fitted correctly, see *Section 7.8.5 Replace UV monitor U9-L flow cell, on page 342*. • **Dirt in the UV flow cell** Clean the UV flow cell, see *Section 7.5.1 Clean the UV flow cell, on page 280*. • **Broken UV flow cell** Replace the cell, see *Section 7.8.5 Replace UV monitor U9-L flow cell, on page 342*.
The UV cell is not correctly installed	• Check that the UV flow cell is fitted correctly, see *Section 7.8.5 Replace UV monitor U9-L flow cell, on page 342*.

Problem	Possible cause and action
Ghost peaks	• **Air in the UV flow cell** Use the Flow restrictor. Use the pH valve instruction to manually set the Flow restrictor inline (***Flow path:pH valve:Restrictor in-line***), or select the Flow restrictor in the ***Method Settings*** phase of a method. Remove the air by flushing the cell with water or buffer. If persistent, clean the UV cell. See *Section 7.5.1 Clean the UV flow cell, on page 280*. • **Air in buffers** De-gas if necessary. • **Dirt in the UV flow cell** Clean the UV cell. See *Section 7.5.1 Clean the UV flow cell, on page 280*. • **Dirt in the flow path** Clean the system in accordance to *Section 7.6.2 Perform System CIP, on page 286*. Clean the column in accordance to *Section 7.6.3 Perform Column CIP, on page 294*.
The UV lamp is broken or worn out	• Contact Service

Problem	Possible cause and action
Distorted protein peaks in IEX gradients (for example step gradients).	• **Rapid changes of the refractive index** The refractive index of the buffer changes rapidly in quick IEX gradients. The rapid change may cause light spreading effects and disturb the shape of the protein peaks in the U9-L 2 mm flow cell. Run with reversed flow direction through the 2 mm cell: connect the inlet tubing at the bottom and the outlet tubing at the top of the flow cell. ***Note:*** *The standard tubing (**7**) between the UV monitor and the conductivity monitor is too short (170 mm) for mounting the monitor for reversed flow direction. Perform the following actions:* *1 Replace the standard tubing with a tubing that is 210 mm long.* *2 Update the total delay volume. The increase in volume depends on the inner diameter (i.d.) of the tubing:* *- inner diameter (i.d.) 0.25 mm : 2 µl* *- i.d. 0.50 mm : 8 µl* *- i.d. 0.75 mm: 18 µl* *- i.d. 1.0 mm: 32 µl*

Conductivity monitor

Problem	Possible cause and action
The Conductivity monitor is not found by the instrument	• **The Conductivity monitor cable has come loose** Switch off the instrument. Reconnect the Conductivity monitor cable (the black cable in the illustration below). 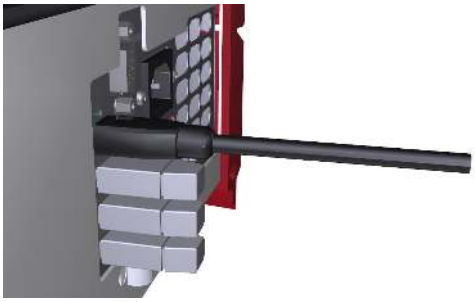 Restart the instrument.
The cell constant measurement has been aborted	• **Internal errors** See error log. Restart instrument and retry. If this problem recurs, generate a System error report and contact Service.
Unstable conductivity	• **Air in the Conductivity flow cell** Flush the Conductivity flow cell with water. • **Solids in the Conductivity flow cell** Clean the Conductivity cell. See *Section 7.6.12 Clean the Conductivity flow cell, on page 315*.
Temperature out of range for calibration	• **This error can only occur when the temperature compensation is turned on. The error will occur when the temperature is outside the range 2°C to 40°C.** Make sure the temperature of the calibration solution is within 2°C and 40°C.

Problem	Possible cause and action
Baseline drift of noisy signal	• **Air in the Conductivity flow cell** Use the Flow restrictor. Remove the air by flushing the flow cell with water or buffer. • **Leaking tubing connections** Tighten the connectors. If necessary, replace the connectors. • **Unclean Conductivity flow cell** Clean the Conductivity flow cell. See *Section 7.6.12 Clean the Conductivity flow cell, on page 315*. • **Poor mixing function** Check the Mixer chamber size and change chamber if necessary. See *Section 7.8.2 Replace the Mixer, on page 335*. Check the motor operation of the Mixer. Place a magnet close to the Mixer chamber during run. The magnet should vibrate. Check that the Mixer chamber is free from solids. To replace the inline filter, see *Section 7.3.2 Replace the inline filter, on page 272*.
Conductivity measurement with the same buffer appears to decrease/increase over time.	• **Unclean conductivity flow cell** Clean the Conductivity cell. See *Section 7.6.12 Clean the Conductivity flow cell, on page 315*. • **The ambient temperature may have decreased/increased** Use a temperature compensation factor. The temperature compensation factor is found in ***System Control:System Settings:Conductivity.*** Instruction regarding the factor is also found in *Section 7.7.3 Calibrate the Conductivity Monitor, on page 324*. • **The Conductivity monitor needs to be calibrated** Check calibration with a solution with known conductivity. Calibrate the Conductivity monitor. See *Section 7.7.3 Calibrate the Conductivity Monitor, on page 324*.

Problem	Possible cause and action
Waves on the gradient	• **Bad pump function** Check that the pump is operating properly. See *Examples of pump pressure curves, on page 397* for example of pump pressure curves. • **Air in the flow path** Purge the pumps. See *Section 5.4.1 Prime buffer inlets and purge system pumps, on page 164* and *Section 5.4.3 Prime Q inlets, on page 176*. • **Poor mixing function** Check that the correct Mixer chamber size is used. See *Select Mixer chamber, on page 155* for recommendations. To change the Mixer, see *Section 7.8.2 Replace the Mixer, on page 335*. Check the motor operation of the Mixer. Place a magnet close to the mixer chamber during run. The magnet should vibrate. Check that the Mixer chamber is free from solids. To open the mixer, see *Section 7.3.2 Replace the inline filter, on page 272*.
Ghost peaks appear in the gradient profile	• **A charged particle has been detected** Prepare the sample so that charged particles are eliminated. • **Air bubbles are passing through the flow cell** Check for loose tubing connections. Use the Flow restrictor.
Non-linear gradients or slow response to %B changes ***Note:*** *Remember, conductivity at high salt concentrations are intrinsically not linear.*	• **Dirt in the tubing** Make sure that the tubing has been washed properly. • **Bad pump function** Make sure that the pump operates properly. See *Examples of pump pressure curves, on page 397* for example of pump pressure curves. • **The Mixer chamber is too large** Change to a Mixer chamber with a smaller volume. See *Select Mixer chamber, on page 155* for recommendations. To change the Mixer, see *Section 7.8.2 Replace the Mixer, on page 335*.

Problem	Possible cause and action
Incorrect or unstable reading	• **The temperature compensation factor is not properly set** Use a temperature compensation factor. The temperature compensation factor is found in ***System Control:System Settings:Conductivity.*** Instruction regarding the factor is also found in *Section 7.7.3 Calibrate the Conductivity Monitor, on page 324*. • **The column is not equilibrated** Equilibrate the column. Use the method phase ***Equilibration***. If necessary, clean the column. Use the predefined method ***Column CIP***. See *Section 7.6.3 Perform Column CIP, on page 294*. • **Poor mixing function** Check that the correct Mixer chamber size is used. See *Select Mixer chamber, on page 155* for recommendations. To change the Mixer, see *Section 7.8.2 Replace the Mixer, on page 335*. Check the motor operation of the mixer. Place a magnet close to the Mixer chamber during run. The magnet should vibrate. Check that the Mixer chamber is free from solids. To open the Mixer, see *Section 7.3.2 Replace the inline filter, on page 272*.

pH monitor and pH valve

Problem	Possible cause and action
The pH module is not found by the instrument	• **The cable between the pH valve and the ICU is not connected** Remove the pH valve and make sure that the cable is connected. See *Section 7.8.10 Replace a valve module, on page 351*

Problem	Possible cause and action
The internal valve temperature is too high	• **The air intake on the rear or on the left side of the instrument is covered** Make sure that none of the air intakes on the instrument are covered. • **Hot surroundings** Decrease the room temperature. Maximum operating temperature is 35°C. • **Hardware error** Switch off the instrument and wait until the temperature has decreased. Restart the instrument. If this error is recurrent, generate a System error report and contact Service.

Problem	Possible cause and action
Unstable pH signal	• **Calibration time out** Check the connections between pH electrode and pH monitor. Regenerate the pH electrode. Place the electrode in deionized water for 30 minutes followed by 30 minutes in a buffer with pH 4. If the pH electrode has dried out, stronger regeneration may be needed see *Section 7.5.2 Replace the pH electrode, on page 283* If persistent, replace the pH electrode. See *Section 7.5.2 Replace the pH electrode, on page 283*. • **Bad or dried out pH electrode** Regenerate the pH electrode. Place the electrode in deionized water for 30 minutes followed by 30 minutes in a buffer with pH 4. Clean the pH electrode. See *Section 7.6.7 Clean the pH electrode, on page 304*. If persistent, replace the pH electrode. See *Section 7.5.2 Replace the pH electrode, on page 283*. • **Wrong mixer size for the used flow rate** Use the recommended mixer size for the used flow rate. See *Select Mixer chamber, on page 155*. • **Wrong tubing connected between the Inlet valves and the System pumps** If ***BufferPro*** is run on ÄKTA avant 150 at a flow rate ≤ 10 ml/min, replace the pieces of tubing marked **InA** and **InB** with FEP tubing, o.d. 1/8", i.d. 1.6 mm. See *Tubing labels, on page 429*. • **pH reading unstable after column equilibration** A specific system wash instruction during column equilibration is the default selection for ÄKTA avant 150 when using ***BufferPro***. If pH readings for ÄKTA avant 25 are unstable after column equilibration, replace the regular system wash instruction with the instruction ***System wash BufferPro***. This will increase the run time of the method.

Problem	Possible cause and action
Drift of pH signal when the pH electrode has been removed from storage solution	• **Decreasing salt concentration in the electrode membrane due to osmosis to buffer** Regenerate the pH electrode. Place the electrode in deionized water for 30 minutes followed by 30 minutes in a buffer with pH 4.
Temperature reading error	• **The temperature compensation of the pH monitor is turned off** Contact Service.
It is not possible to inject calibration solution	• **Waste tubing is twisted or blocked** Untwist the tubing. Perform System CIP to clean waste tubing. See *Section 7.6.2 Perform System CIP, on page 286*. Change the tubing.
Alarm in UNICORN: ***(Alarm) The pH cell can only be run at pressures below 0.8 MPa. Please check the tubing or lower the flow through the pH cell.*** ***Note:*** *The pressure limit 0.8 MPa is for the post column pressure.*	• **High pressure in the pH cell** Decrease the flow rate. By-pass the pH electrode (see *Ports and flow paths of the pH valve, on page 79*) and measure pH in fractions manually. If ÄKTA avant 25 is used: Replace tubing between Column valve and Outlet valve by tubing with i.d. 0.75 mm (tubing: 6, 7, 8, 9, 1R and 2R).

Pressure monitors

Problem	Possible cause and action
Pressure offset	• **The monitors have lost their calibration** Calibrate the pressure monitors. See *Section 7.7.2 Calibrate the pressure monitors, on page 320*. • **The temperature has changed** Wait until the temperature has stabilized and calibrate the pressure monitors. • **Incorrect installation of extra Column valve** Check installation positions and tubing connections. Refer to the installation instructions delivered together with the extra valve.
Excessively high pressure values	• **Unclean inline filter in the Mixer** Replace the inline filter in the Mixer. See *Section 7.3.2 Replace the inline filter, on page 272*. • **Solids in the flow path** To use the predefined method System CIP to clean the flow path, see . To clean the column, see *Section 7.6.2 Perform System CIP, on page 286*. If persistent, replace the column.
The pressure monitors are not found by the instrument	• **The cable between the Pressure monitors and the ICU is not connected**. Remove the monitor and make sure that the cable is connected.
The internal temperature of the pressure monitor is too high	• **The air intake on the rear or on the left side of the instrument is covered** Make sure that none of the air intakes on the instrument are covered. • **Hot surroundings** Decrease the room temperature. Maximum operating temperature is 35°C. • **Hardware error** Switch off the instrument and wait until the temperature has decreased. Restart the instrument. If this error is recurrent, generate a System error report and contact Service.

Problem	Possible cause and action
Irregular pressure curves	• **Air bubbles are passing through or are trapped in the pump** Check that there is a sufficient volume of buffer present in the flasks. Check all connections and tubing for leaks and constrictions. Check pump pressure curves. See *Section 8.6 Troubleshooting: Pumps, on page 394* for example of pump pressure curves. Purge the pumps, see *Section 5.4.1 Prime buffer inlets and purge system pumps, on page 164*. • **The check valve does not function correctly** Remove any solids in the valves by cleaning the check valves according to the instructions in *Section 7.6.9 Clean pump head check valves, on page 309*. • **Piston seal is leaking** Replace the piston seal according to the instructions in *ÄKTA avant Operating Instructions*. A sign of leakage is that the pump rinsing solution volume starts to increase. • **Blockage of flow path** Use the predefined method ***Prepare System*** to flush through to clear blockage. If necessary, replace tubing. See *Section 7.8.1 Replace tubing and connectors, on page 333*. Check the mixer inline filter. It can be clogged if unfiltered buffers or samples are applied. See *Section 7.3.2 Replace the inline filter, on page 272* for instructions how to replace the mixer inline filter. Check the inlet filters. They can be clogged if unfiltered buffers or samples are applied. To replace the filters, see *Section 7.8.7 Replace the inlet filters, on page 345*. Check the column. It can be clogged if unfiltered buffers or samples are applied. To clean a column, see *Section 7.6.3 Perform Column CIP, on page 294*.

8.4 Troubleshooting: Valves

General

The following table lists the general problems that may occur for the different valves.

Problem	Possible cause and action
The valve is not found by the instrument	• **The cable between the valve and the ICU is not connected** Remove the valve and make sure that the cable is connected. See *Section 4.2 Installation of optional modules, on page 100*. • **Wrong Node ID** Check the valve Node ID. If necessary, change the Node ID. See *Section 9.15 Check and change the Node ID of a module, on page 510*.
The internal valve temperature is too high	• **The air intake on the rear or on the left side of the instrument is covered** Make sure that none of the air intakes on the instrument are covered. • **Hot surroundings** Decrease the room temperature. Maximum operating temperature is 35°C. • **Hardware error** Switch off the instrument and wait until the temperature has decreased. Restart the instrument. If this error is recurrent, generate a System error report and contact Service.
The valve is not switching or is switching to wrong position	• **Hardware error** Generate a System error report and contact Service.
External leakage	• **Hardware error** Generate a System error report and contact Service.
Internal leakage	• **Broken valve** Replace the valve. See *Section 4.2 Installation of optional modules, on page 100*.

Inlet valves

Problem	Possible cause and action
Faulty air sensor in the valve	• **Hardware error** Restart the instrument with the power switch. If this error is recurrent, generate a System error report and contact Service.

pH valve

Problem	Possible cause and action
Leaking pH valve	• **The dummy electrode was dry when it was installed in the valve.** 1 Remove the dummy electrode. 2 Wet the dummy electrode properly with distilled water. 3 Insert the dummy electrode into the pH valve. 4 Rotate the dummy electrode before securing it with the nut.

Module Panel

Problem	Possible cause and action
The instrument is unable to find some of the modules	• **A Module Panel is missing and the position is left empty** Install the missing Module Panel. • **The cable between the Module Panel and the ICU is not connected** Remove the Module Panel and make sure that the cable is connected.

Quaternary valve

Problem	Possible cause and action
Wrong mixing ratio for Quaternary valve	• **The sum of the flow from inlet Q1-Q4 is not equal to 100% of the total flow** Make sure that the sum of the flow from inlet Q1-Q4 is equal to 100% of the total flow.
Unexpected values for e.g., pH curve or conductivity curve using a quaternary flow	• **The switch valve is not opened and closed correctly** Perform Performance test according to *ÄKTA avant Unpacking Instructions*. Check result and, if necessary, generate a System error report and contact Service.

8.5 Troubleshooting: Fraction collector

In this section

- Built-in Fraction collector
- Fraction collector F9-R

Built-in fraction collector

Note: *Only ÄKTA avant 25 has DropSync sensors.*

Problem	Possible cause and action
The Fraction collector cannot be found by the instrument	• **The cable between the Fraction collector and the ICU is not connected** Generate a System error report and contact Service. • **A fuse in the instrument ICU is broken** The ICU needs to be changed. Generate a System error report and contact Service. • **Wrong Node ID** • Check the module's Node ID. If necessary, change the Node ID. See *Section 9.15 Check and change the Node ID of a module, on page 510*.
Fraction collector arm is blocked or internal fault in the Fraction collector	• **Obstruction inside the Fraction collector** Switch off the instrument and check for obstruction inside the Fraction collector. Try to move the Frac arm by hand. Switch on the instrument. If this error is recurrent, generate a System error report and contact Service.
The accumulator is jammed or there is an internal error in the instrument	• **Salt crystals or protein residuals block the accumulator** Restart the instrument and perform an accumulator wash. • **Mechanical error** If this error is recurrent, generate a System error report and contact Service.

Problem	Possible cause and action
Fraction collection tube or well is over-filled and fractionation movements are lost.	• **Too many commands are pending in the Fraction collector** The reason could be that too many Fraction collector instructions have been sent. Wait for a while and try again.
The Fraction collector failed to detect the code on the Cassette	• **Unclean Cassette type code reader** Clean the dispenser head and its four diode windows using a cloth and a mild cleaning agent or 20% ethanol. See *Section 7.6.4 Clean built-in fraction collector, on page 298* for more information. • **Unclean Cassette type codes** Clean the Cassette type codes. See *Section 7.6.4 Clean built-in fraction collector, on page 298* for more information. If this error is recurrent, set the Fraction collector configuration manually in UNICORN. In ***System Control***, select ***System:Settings***. Navigate to ***Fraction collector:Cassette configuration*** and select ***Manual***.
The Cassette tray is loose in the Fraction collector	• **The Cassette tray positioning discs in the Frac chamber are missing** Replace the Cassette tray positioning discs in the Frac chamber. See *Section 7.6.4 Clean built-in fraction collector, on page 298*.
Calibration of the DropSync sensor failed	• **Unclean Drop sync sensor diode windows** Clean the Drop sync sensor diode windows. See *Section 7.6.4 Clean built-in fraction collector, on page 298* for location of the Drop sync sensor diode windows and cleaning instructions. If this error is recurrent, generate a System error report and contact Service.

Problem	Possible cause and action
The Dispenser head failed to detect a drop	• **Air in the flow path** Check the flow path for air. Fill system and purge pumps according to *Section 5.4 Prime inlets and purge pump heads, on page 163*. If this error is recurrent, generate a System error report and contact Service. • **Unclean DropSync sensor diode windows** Clean the DropSync sensor diode windows. See *Section 7.6.4 Clean built-in fraction collector, on page 298*. If this error is recurrent, generate a System error report and contact Service. • **Too high flow rate** Decrease the flow rate.
The Dispenser head failed to detect the flow properly and has switched to tube change with reduced accumulator functionality	• **Air in the flow path** Check the flow path for air. Fill system and purge pumps according to *Section 5.4 Prime inlets and purge pump heads, on page 163*. If this error is recurrent, generate a System error report and contact Service. • **Unclean DropSync sensor diode windows** Clean the DropSync sensor diode windows. See *Section 7.6.4 Clean built-in fraction collector, on page 298*. If this error is recurrent, generate a System error report and contact Service.

Problem	Possible cause and action
The Dispenser head failed to detect a drop and has switched to tube change without DropSync	• **Too high flow rate** Decrease the flow rate. • **Air in the flow path** Check the flow path for air. Fill system and purge pumps according to *Section 5.4 Prime inlets and purge pump heads, on page 163*. If this error is recurrent, generate a System error report and contact Service. • **Unclean DropSync sensor diode windows** Clean the DropSync sensor diode windows. See *Section 7.6.4 Clean built-in fraction collector, on page 298*. If this error is recurrent, generate a System error report and contact Service.
The internal temperature of the Fraction collector is too high	• **High ambient temperature** If the ambient temperature is too high the target temperature in the Frac chamber cannot be reached. Decrease the room temperature. • **The temperature control function is turned off** In the ***System Settings*** dialog box, check the settings for the temperature control function (***Fraction collector:Temperature***). • **Hardware error** Switch off the instrument and wait until the temperature has decreased. Restart the instrument. If this error is recurrent, generate a System error report and contact Service.
The hot side of the cooling element in the Fraction collector is overheated	• **The fan on the back side of the instrument is blocked** Switch off the instrument. Remove the obstruction. Restart the instrument when the temperature has decreased. • **Mechanical error** Switch off the instrument until the temperature has decreased. If this error is recurrent, generate a System error report and contact Service.

Problem	Possible cause and action
Tubes do not fit in the Cassette	• **Wrong tube dimensions are used** Check that the used tubes have the right dimensions. See *Section 3.10.3 Cassettes, cassette tray and racks, on page 87* for information about tubes and Cassettes. • **QuickRelease function is worn out** Order a new Cassette. See *Built-in fraction collector, on page 520* for ordering information.
Deep well plate does not fit in the Cassette	• **Unsupported deep well plate model** Check that the deep well plates are supported. See *Section 3.10.3 Cassettes, cassette tray and racks, on page 87*.
The Cassette does not fit the Cassette tray	• **The Cassette is turned in the wrong direction** See *Section 5.8.1 Prepare the built-in fraction collector, on page 201* for information of how to place the Cassettes. • **Objects or dirt under the Cassette** Remove the object or dirt.
Cassette tray in wrong position	• **The Cassette tray positioning discs in the Frac chamber are missing** Replace the Cassette tray positioning discs in the Frac chamber. See *Section 7.6.4 Clean built-in fraction collector, on page 298*. • **Incorrect positioning of the Cassette tray in the Frac drawer** Make sure that the front of the tray (marked with the GE logo) is facing the front of the Frac drawer. See *Section 5.8.1 Prepare the built-in fraction collector, on page 201*. **Dirt under the Cassette tray** Remove the dirt.

Problem	Possible cause and action
The loaded Cassette tray cannot be inserted into the Frac chamber	• **Some of the tubes or plates are incorrectly placed in the Cassettes** Check that all tubes and plates are correctly inserted in the Cassettes. See *Section 5.8.1 Prepare the built-in fraction collector, on page 201*. • **Some of the tubes or plates have the wrong dimensions** Check that the deep well plates and the tubes used are of the right type. See *Section 3.10.3 Cassettes, cassette tray and racks, on page 87* for information about supported tubes and plates.
Quick scan or Full scan does not work	• **Cassette tray positioning discs are missing** Replace the Cassette tray positioning discs. See *Section 7.6.4 Clean built-in fraction collector, on page 298*. • **The Cassette type codes are unclean** Clean the the Cassette type codes. • **The QuickRelease of a Cassette is in open position** Close the Cassette. See *Section 5.8.1 Prepare the built-in fraction collector, on page 201*. • **The Cassette code reader diode window is unclean** Clean the Cassette code reader diode window. See *Section 7.6.4 Clean built-in fraction collector, on page 298*. • **The automatic scanning is turned off in UNICORN** Make sure that the automatic scanning is turned on in UNICORN software. In ***System Control***, select **System:Settings**. Navigate to ***Fraction collector:Cassette configuration*** and select ***Automatic***. • **Wells in deep well plates are prefilled to a volume above 25% of the total well volume** Full scan will not work with prefilled wells during these conditions. • **Hardware error** Generate a System error report and contact Service.

Problem	Possible cause and action
The Frac chamber is dark	• **The light has been turned off in UNICORN** Turn on the light in UNICORN. In ***System Control***, select **System:Settings**. Navigate to ***Fraction collector:Fraction collector lamp*** and select ***Lamps On***. • **The lamp is broken** Contact Service.
The Frac waste is flooded	• **The Frac waste tubing is positioned so that the flow is obstructed** Untwist the waste tubing. • **The waste container is placed in a position higher than the waste outlet** Place the waste container in a position lower than the waste outlet. • **Waste tubing is blocked**. Clean or replace the waste tubing.
The liquid leaving the nozzle does not strike the waste funnel	• **Check the position of the waste funnel** Refit the waste funnel.
The Frac capillary is blocked	• **Salt residuals in the capillary** Perform an ***Accumulator wash***. If persistent, contact Service.
The fraction volume found in the tubes or wells are smaller than expected	• **Leakage on the wet side of the instrument** Localize the leakage and take care of the leakage, for example by tightening connectors. • **Air in pumps** Purge pumps. See *Section 5.4.1 Prime buffer inlets and purge system pumps, on page 164*. • **Bad pump function** See troubleshooting of pumps in *Section 8.6 Troubleshooting: Pumps, on page 394*. • **Leakage inside the Frac chamber** Contact Service.

Problem	Possible cause and action
Liquid on the floor to the right of the Cassette tray	• **Leakage in the Frac arm** Contact service.
Spillage by the Fraction collector during fractionation	• **Unclean DropSync sensor diode windows or unclean nozzle** Clean the DropSync diode windows and the nozzle. See *Section 7.6.4 Clean built-in fraction collector, on page 298*. Use the Fraction collector cleaning position. • **Too high flow rate during usage of DropSync** Use a flow rate below 2 ml/min. • **One or more Cassettes have empty positions** Make sure that all Cassette positions contain tubes or plates. • **The tubes are flooded** Make sure that the fraction volume is adapted to the tube volume. Fraction tubes have not been replaced by empty tubes when the Fraction collector was opened.
It is not possible to fractionate	• **The Frac drawer is not properly closed** Close the Frac drawer.
Hard to pull out the Frac drawer and Cassette tray	• **The arm flat cable is stuck under the Cassette tray** Carefully try to remove the Cassette tray. If persistent, contact Service.
The Frac arm is blocked	• **The arm flat cable has locked the Frac arm** Contact Service.

Problem	Possible cause and action
The Fraction collector fractionates in the wrong well or tube	• **Quick scan has not detected the correct Cassette** Clean the Cassette type code of the Cassette. See *Section 7.6.4 Clean built-in fraction collector, on page 298*. • **Unsupported deep well plate is used.** Make sure that approved deep well plates are used. See *Section 3.10.3 Cassettes, cassette tray and racks, on page 87*. • **Wells in deep well plates are prefilled to a volume above 25% of the total well volume** Full scan will not work with prefilled wells during these conditions. • **The deep well plate is not correctly positioned in the Cassette** See *Section 5.8.1 Prepare the built-in fraction collector, on page 201* for information of how to place the deep well plate • **Dirt on the nozzle or DropSync sensor diode windows. Dirt may effect where the drops fall**. Clean nozzle and DropSync sensor diode windows. See *Section 7.6.4 Clean built-in fraction collector, on page 298*.
Error message when the Frac drawer is opened during a run	• **Some parts in a method require that the Frac drawer is closed.** Do not open the Frac drawer when the symbol indicating ongoing fractionation is displayed on the Instrument display (see *Buttons and indicators, on page 39*).
The instrument does not fractionate via the Outlet valve ports	• **The Detector - Outlet valve delay volume has been set to zero.** 1 In ***System Control***, select ***System:Settings:Fraction collections:Delay volumes***. 2 Correct the Detector - Outlet valve delay volume.

Problem	Possible cause and action
When starting a method run during a manual run, the Fraction collector generates an error message indicating that the wrong Cassettes are in place, even though the correct Cassettes are present in the Fraction collector.	**Action:** End a manual run before starting a method run.
High pressure alarm when collecting fractions with the Fraction collector	**Action**: • Decrease the flow rate or use Outlet valve fractionation, or • (only if ÄKTA avant 25 is used) replace tubing according to instructions below. Replace the tubing between Column valve and Outlet valve by tubing with i.d. 0.75 mm (tubing: 6, 7, 8, 9, 1R and 2R). ***Note:*** *Delay volumes in **System Settings** have to be changed to:* *Detector - Frac: 635 µl* *Detector - Outlet valve: 260 µl* *Restrictor volume: 85 µl* To change the Fraction collector capillary from i.d. 0.5 to i.d. 0.75 mm, contact GE Service. ***Note:*** *If the Fraction collector capillary is also changed, the delay volume, Detector - Frac, has to be changed to 950 µl.*
Spillage in Fraction collector when the Frac arm is moving from Cassette placed in position 1 and 2 to waste	**Action**: If possible, place the Cassettes close to waste, i.e., position 5 or 6 during fractionation.

Problem	Possible cause and action
The fractionation starts in the first row again	• **The Frac drawer has been opened between two runs. When the instrument is in state *Ready* and the drawer is opened and closed, the Fraction collector content is reset.** If fractionation will continue after the last fraction of the first run, do not open the Frac drawer between two runs.
Spillage between fractions	• **The combination of high flow rates and liquids with low surface tension might lead to spillage in the Fraction collector.** If possible use Cassette positions 5 and 6. Lower the flow rate when using liquids with low surface tension.
The circulation fan in the Fraction collector is blowing even though the Fraction collector is not in use	• **The fan controlling the temperature in the Fraction collector is not automatically turned off if the Fraction collector is deselected as component.** Before deselecting the Fraction collector as component (performed in ***System properties*** in the ***Administration*** module), follow the instruction below to turn off temperature control: 1 In the ***System Control*** module, select ***System:Settings***. 2 Select ***Fraction collection: Fraction collector temperature***. 3 Select ***Mode Off***. 4 Confirm the selection.

Fraction Collector F9-R

Problem	Possible cause and action
The fraction collector cannot be found by the instrument	• **The cable between the fraction collector and the ÄKTA avant instrument is not connected** Make sure that the cable is connected. • **Wrong node ID** Check the Node ID of the fraction collector. If necessary, change the Node ID. See *Section 9.15 Check and change the Node ID of a module, on page 510*.

Problem	Possible cause and action
The internal temperature of the fraction collector is too high	• **Hot surroundings** Decrease the room temperature. Maximum operating temperature is 35°C. • **Hardware error** Switch off the instrument and wait until the temperature has decreased. Restart the instrument. If this error is recurrent, generate a System error report and contact service.
The fraction collector failed to detect a drop and has changed tube without DropSync.	• **To high flow rate for DropSync** Decrease the flow rate or disable DropSync. • **Air in the flow path** Check the flow path for air. Fill system and purge pumps. If this error is recurrent, generate a System error report and contact service. • **Unclean DropSync sensor** Clean the drop sensor photocell located above the tube sensor with a damp cloth. • **The tubing is not correctly mounted in the tubing holder nut** Check that the tubing is correctly mounted, see *Connect tubing to the ÄKTA avant instrument, on page 132*.
The tube sensor has not detected a new tube.	• **The fraction collector movement is blocked** Make sure that the fraction collector can move and is free from obstructions.
The delay queue is full or there is a tube change overload.	• **The flow rate is too high** Reduce the flow rate. • **The fraction volume is too small** Collect larger fractions. • **Too many fraction collector instructions have been sent** Wait for a while and try again.

Problem	Possible cause and action
Fraction numbering does not start at 1 when the fractionation is restared after a *No tube* error	**Fraction numbering continues from where it was at the time of the *No tube* error** Manually reset the fraction number in the ***System settings*** menu.

8.6 Troubleshooting: Pumps

In this section

- Troubleshooting for System pumps and Sample pumps
- Example of pump pressure curves
- Remove persistent air bubbles

Pumps

Problem	Possible cause and action
Liquid is leaking between the pump head and the side panel	• **Piston seal or rinsing membrane incorrectly fitted or worn** Replace or reinstall the seal or the membrane. See *ÄKTA avant Operating Instructions*.
Low eluent flow and noise	• **Air in pumps** Purge the pumps. See *Section 5.4.1 Prime buffer inlets and purge system pumps, on page 164*. • **Bad piston spring** Disassemble the pump head and examine the piston spring. If the spring is corroded, check piston seal and rinse membrane. Make sure that the pump piston rinsing system is always used when working with aqueous buffers containing salt. • **Bad pump piston** If the piston is damaged, replace it according to *ÄKTA avant Operating Instructions*. • **Bad pump piston seal** Replace the piston seal and rinse membrane according to *ÄKTA avant Operating Instructions*. • **Blocked pump flow restrictors** See *Section 7.6.10 Clean pump flow restrictors, on page 312*.

Problem	Possible cause and action
Leakage around a connector	• **Leaking connection and/or crystallized material around a connector** Unscrew the connector and check if it is worn or incorrectly fitted. If so, replace the connector. Gently finger tighten the connector.
Erratic pump pressure	• **Air trapped in the pump heads** • **Partially blocked solvent filters** • **Leaking connections** • **Piston seal leakage** • **Check valve malfunction** • **Piston damaged** See *Examples of pump pressure curves, on page 397* for examples of pump pressure curves.
The pump is not found by the instrument	• **The cable between the pump and the ICU is not connected.** Contact Service. • **A fuse in the instrument ICU is broken.** Contact Service.
The internal temperature of the pump is too high	• **The air intake on the rear or on the left side of the instrument is covered** Make sure that none of the air intakes on the instrument are covered. • **Hot surroundings** Decrease the room temperature. Maximum operating temperature is 35°C. • **Hardware error** Switch off the instrument and wait until the temperature has decreased. Restart the instrument. If this error is recurrent, generate a System error report and contact Service.

Problem	Possible cause and action
High pressure alarm	• **The pressure has increased due to increased viscosity** The viscosity increases in cold room. Lower the flow when performing runs in a cold room.
High pressure alarm when pressure control is activated	• **The parameter selected for pressure control is not the most appropriate one** The pressure control is based on either the Pre column pressure or the Delta column pressure. To change the parameter for pressure control, select ***Pre column pressure*** or ***Delta column pressure*** from the ***Pressure control*** drop-down list in the ***Instruction box*** of the instruction of interest. • **The flow is too high** Lower the flow.
Abnormal difference in system pressure compared to pre column pressure	• **Clogged inline filter** Replace the inline filter, see *Section 7.3.2 Replace the inline filter, on page 272*.
Internal pump error combined with high pressure	• **The flow path is blocked** Remove obstructions in the flow path. For example, remove stop plugs and replace constricted tubing.
Internal pump error at normal pressure	• **Blocked pump restrictor** Contact Service.
Too slow pressure build up when pressure control is active	• Too low I factor in the ***Pressure control parameters*** instruction In the ***Manual Instructions*** dialog box, increase the ***I factor*** of the ***Pressure control parameters*** instruction.
Too slow pressure build up when using constant pressure flow	• Too low I factor in the ***Constant pressure flow parameters*** instruction In the ***Manual Instructions*** dialog box, increase the ***I factor*** of the ***Constant pressure flow parameters*** instruction.

Problem	Possible cause and action
Pressure overshoot or oscillating pressure when pressure control is active	• Too high I factor in the ***Pressure control parameters*** instruction In the ***Manual Instructions*** dialog box, decrease the ***I factor*** of the ***Pressure control parameters*** instruction.
Pressure overshoot or oscillating pressure when using constant pressure flow	• Too high I factor in the ***Constant pressure flow parameters*** instruction In the ***Manual Instructions*** dialog box, decrease the ***I factor*** of the ***Constant pressure flow parameters*** instruction.

Examples of pump pressure curves

The table below shows some examples of pump system pressure curves obtained when errors have occurred. The examples can be useful in troubleshooting of the system pumps and the sample pump. The system pressure monitor R9 has higher resolution than the other pressure monitors, and is therefore recommended for troubleshooting purposes.

Incident: 30 µl of air enters pump. One pump head is working normally, the other fails to deliver buffer.

Action: Purge pump. See *Section 5.4.1 Prime buffer inlets and purge system pumps, on page 164*. If the problem is persistent, see *Remove persistent air bubbles, on page 400*.

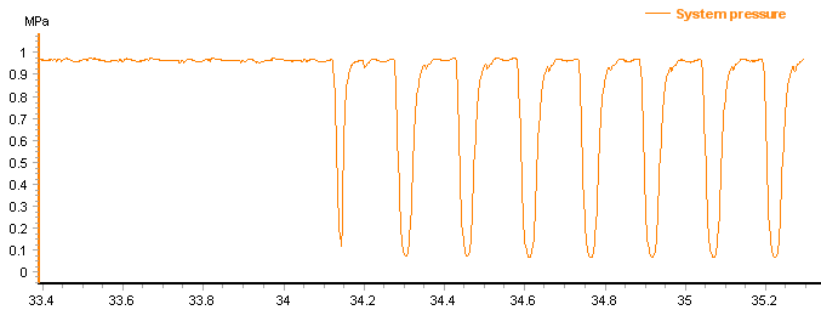

Incident: A large volume of air enters pump. Both pump heads fails to deliver buffer.

Action: Purge pump. See *Section 5.4.1 Prime buffer inlets and purge system pumps, on page 164*.

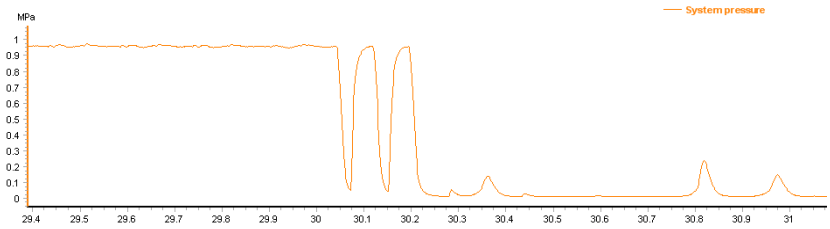

Incident: Blocked outlet check valve

Action: Clean the check valve, See *Section 7.6.9 Clean pump head check valves, on page 309*.

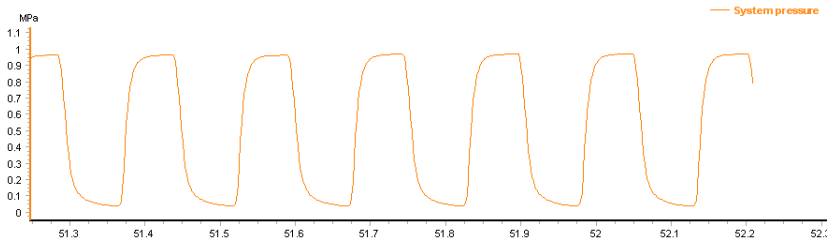

Incident: Inlet check valve is loose.

Action: Tighten the check valve. See *Section 7.8.8 Replace pump head check valves, on page 346*.

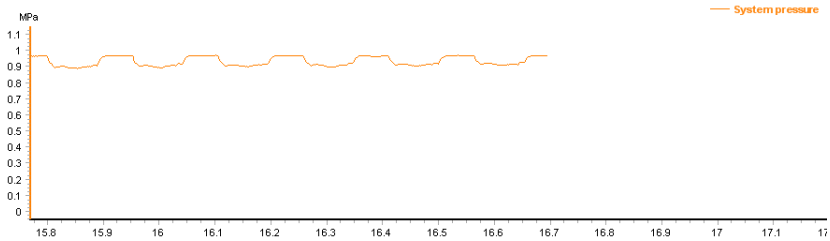

Incident: Internal leaking inlet check valve.

Action: Action: Try first to clean the check valve, see *Section 7.6.9 Clean pump head check valves, on page 309*. If that does not help replace the check valve, see *Section 7.8.8 Replace pump head check valves, on page 346*.

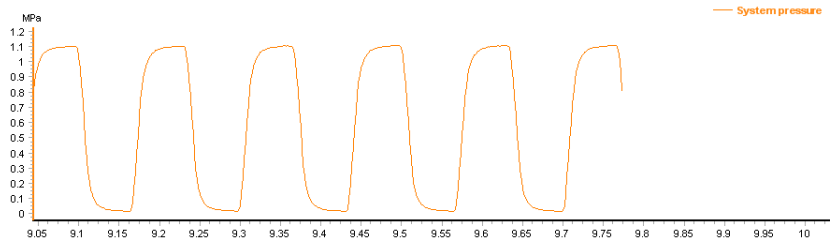

Incident: Internal leaking outlet check valve.

Action: Action: Try first to clean the check valve, see *Section 7.6.9 Clean pump head check valves, on page 309*. If that does not help replace the check valve, see *Section 7.8.8 Replace pump head check valves, on page 346*.

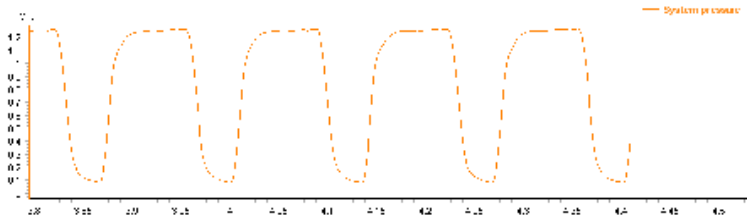

Incident: One inlet is blocked,

Action: Try first to clean the check valve, see *Section 7.6.9 Clean pump head check valves, on page 309*.Try also cleaning of the inlet tubing manifold . For example, perform a System CIP.

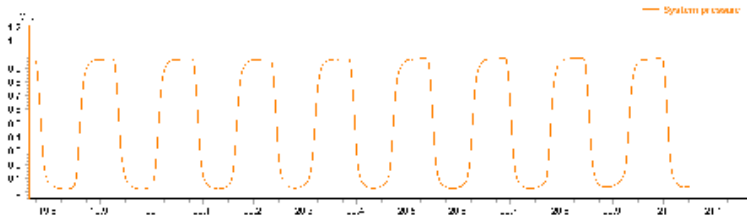

Air segment test

As shown in the previous pressure curves, very often malfunction in inlet or outlet check valves gives the same increased pressure curve pulsation. Sometimes the "air segment test" can help determine if the problem is on the inlet side or the outlet side.

- Introduce an air segment in the inlet tubing while the pump is working.
- Check how the segment moves towards the pump. If the inlet check valves are working properly the air segment will not show any backward movement. If it does, the problem is on the inlet check valve side.

Remove persistent air bubbles

After purging the pump (see *Section 5.4.1 Prime buffer inlets and purge system pumps, on page 164*), check that all air bubbles have been removed by analyzing the precolumn pressure curve (see examples above). If the pressure curve indicates that there are still air bubbles present, repeat the purging process. If the problem persists, follow the instructions below to purge the pump with methanol (see *Section 5.4.1 Prime buffer inlets and purge system pumps, on page 164* for detailed instructions for the purge procedure).

1. Make sure that the pump contains water.
2. Use a syringe to draw 100% methanol into the pump (see *Section 5.4.1 Prime buffer inlets and purge system pumps, on page 164* for details).
3. Set the pump flow to 2.5 ml/min for ÄKTA avant 25 or 10 ml/min for ÄKTA avant 150.
4. Let the flow run until the disturbances in the pressure curve disappear.
5. Remove the methanol:
   - Stop the pump and move the inlet tubing to water. Make sure that no air is introduced into the system.
   - Set the pump flow to 1 ml/min for ÄKTA avant 25 or 5 ml/min for ÄKTA avant 150.
   - Run for 5 minutes.
6. Purge the pump again using an appropriate buffer.

8.7 Troubleshooting: Other components

In this section

- General Hardware: All modules
- Mixer
- Superloop
- Cabinet
- Power and ICU
- External air sensors
- I/O-box E9
- Instrument display

General hardware: All modules

Problem	Possible cause and action
Siphoning occurs through the system in column and flow restrictor by-pass	• The internal pump flow restrictor needs to be replaced, see *Section 7.4.2 Check the function of the pump flow restrictors, on page 278*.
Modules cannot be found by the instrument	• **The cable between a module and the ICU is not connected** Remove the module and make sure that the cable is connected. • **Two similar modules have been added to the instrument, for example two Inlet valve A** Remove one of the modules with the same Node ID. • **The Node ID for one or more of the modules is incorrect, for example an Inlet valve A2 has the same Node ID as Inlet valve A. The instrument then considers them to have the same identity.** Remove Inlet valve A2 and change the Node ID according to *Section 9.15 Check and change the Node ID of a module, on page 510*.

Problem	Possible cause and action
An unknown instrument module is connected to the system	• **The Node ID for one or more of the modules is incorrect** Check Node ID and change the Node ID according to *Section 9.15 Check and change the Node ID of a module, on page 510*.

Mixer

Problem	Possible cause and action
Leakage	• **Leaking tubing connections** Check the tubing connections. Tighten or replace if necessary. Check the O-ring. Replace it if it is damaged. See *Section 7.8.3 Replace the O-ring inside the Mixer, on page 337*. Check the Mixer chamber. Replace it if the liquid has penetrated the Mixer chamber walls and sealings. See *Section 7.8.2 Replace the Mixer, on page 335*. See *Mixer, on page 517*.
Unstable gradients and/or noisy UV signal	• **Bad mixing of eluents** Check the function of the Mixer. Place a stirrer bar in the palm of your hand. Hold the hand above the Mixer. The stirrer should move when the Mixer is activated. Check the Mixer chamber size and change chamber if necessary. See *Section 7.8.2 Replace the Mixer, on page 335*.
The Mixer chamber was not recognized	• **The Mixer chamber is not correctly installed** Verify that the Mixer chamber is correctly installed. See *Section 7.8.2 Replace the Mixer, on page 335*. If the error is recurrent, replace the Mixer chamber. See *Mixer, on page 517*.

Problem	Possible cause and action
The internal Mixer temperature is too high	• **The air intake on the rear or on the left side of the instrument is covered** Make sure that none of the air intakes on the instrument are covered. • **Hot surroundings** Decrease the room temperature. Maximum operating temperature is 35°C. • **Hardware error** Switch off the instrument and wait until the temperature has decreased. Restart the instrument. If this error is recurrent, generate a System error report and contact Service.

Superloop

Problem	Possible cause and action
Overpressure during filling	• **The Superloop is filled to the max. Pressure is not released anywhere.** Manually turn Injection valve to ***Manual load*** position.

Cabinet

Problem	Possible cause and action
The instrument is not locked on the chosen swirl foot position	• **The lock/unlock knob is in the unlock position** Turn the lock/unlock knob to the lock position. • **The rubber behind the lock/unlock knob is unclean** Clean the swirl foot. • **The rubber behind the lock/unlock knob is worn out** The rubber needs to be changed. Call service.
The second section of the foldable door cannot be opened	• **Wrong procedure** Pull the second section of the foldable door upwards before opening it.

Problem	Possible cause and action
The temperature of the instrument or an instrument component is too high	• **The air intake on the back or on the left side of the instrument is covered** Make sure that none of the air intakes on the instrument are covered. • **Broken fans** Contact Service. • **Hot surroundings** Decrease the room temperature. Maximum operating temperature is 35°C.
The Pump cover is falling down	• **The gas spring is worn-out** Contact Service.
Liquid from the Buffer tray is flowing onto the table	• **The waste tubing from the Buffer tray is loose** Contact Service.

Power and ICU

Problem	Possible cause and action
The instrument cannot be turned on	• **The power cord is not connected** Connect the power cord to the wall outlet and to the electrical inlet on the instrument. Make sure that the cord is attached using the clip, thereby preventing the cord from coming loose. • **No electric current in the wall outlet** Make sure that there is electric current in the wall outlet. • **A fuse in the instrument ICU is broken** Contact Service. • **The instrument is overheated** Switch off the instrument and wait until the temperature has decreased. Restart the instrument. If this error is recurrent, generate a System error report and contact Service.

Problem	Possible cause and action
One or more modules are automatically turned off	• **One or some of the minor modules use too much current. Minor modules include all modules except the Fraction collector, the UV monitor and the pumps.** The current is cut off by a temperature sensitive component. The instrument can be restarted when the temperature has decreased. If persistent, generate a System error report and contact Service.
The instrument cannot be seen in UNICORN	• **The network cable is not connected** Connect the cable, see *UNICORN Administration and Technical Manual*.
One or more modules are not found by the instrument	• **The cable between a module and the ICU is not connected**. Remove valves and check that cables are connected. • **One or more jumpers are loose or missing**. Check the connections on the back of the instrument. Empty positions must have connected jumpers. See the illustration below. 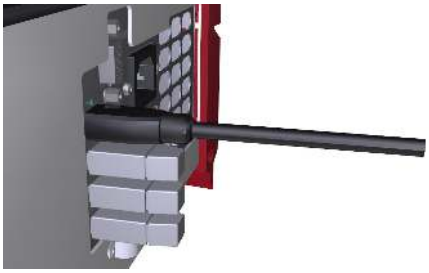

Problem	Possible cause and action
The internal instrument temperature is too high	• **The air intake at the rear or on the right side of the instrument is covered** Make sure that none of the air intakes on the instrument are covered. • **Hot surroundings** Decrease the room temperature. Maximum operating temperature is 35°C. • **Hardware error** Switch off the instrument and wait until the temperature has decreased. Restart the instrument. If this error is recurrent, generate a System error report and contact Service.

External air sensors

Problem	Possible cause and action
The external air sensor is not found by the instrument	• **The cable between the external air sensor and the ICU is not connected** Check the back of the instrument and make sure that the cable is connected. See illustration below. 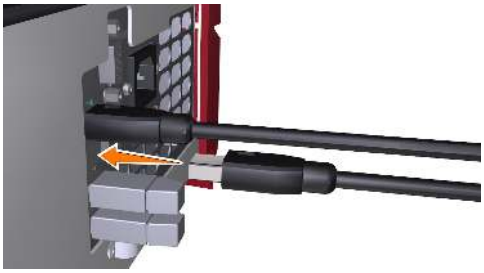 • **The external air sensor has not been selected in UNICORN** Select the external air sensor in UNICORN. Refer to the installation instructions delivered together with the external air sensor.
Air is introduced into the flow path	• **One of the connections is not tight enough** Tighten the connectors.

Problem	Possible cause and action
Liquid is leaking from the external air sensor	• **One of the connections is not tight enough** Tighten the connectors.
The internal temperature of the air sensor is too high	• **Hot surroundings** Decrease the room temperature. Maximum operating temperature is 35°C. **Hardware error** Switch off the instrument and wait until the temperature has decreased. Restart the instrument. If this error is recurrent, generate a System error report and contact Service.

I/O-box

Problem	Possible cause and action
The internal temperature of the I/O-box is too high	• **Hot surroundings** Decrease the room temperature. Maximum operating temperature is 35 C. • **Hardware error**
The I/O-box is not detected by the system	• **Wrong Node ID** Make sure that the Node ID is (00) for the primary box, and (01) for a potential secondary box.
The system does not detect Digital signals correctly	• **Cables incorrectly connected** Make sure that the cables are connected correctly, earth to earth etc.
Digital In always "0", regardless of input signals	• **Digital Out connections switched** Check that the digital Out cables are correctly connected, earth to earth etc.

Problem	Possible cause and action
External digital equipment does not respond to set changes in Digital Out	• **Cables incorrectly connected** Make sure that the cables are connected correctly, earth to earth etc. To isolate the problem: 1 Connect Digital Out (e.g. pin 6) to Digital In (pin 1,2,3, or 4). 2 Change the Digital Out 1 signal between "1" and "0". Verify that Digital out follows. 3 If not: contact Service. If it does: the problem probably lies within the connected equipment.
Analog In does not measure expected voltage	• **Auto-zero on the wrong level** Reset Auto-zero. • **Digital Out connection error** Make sure that Digital Out is connected correctly, earth to earth etc.
Noisy analog signal	• **Too long cable between the external equipment and E9** Use as short cable as possible. Use shielded cable. Connect the cable shield to the D-sub connector's shield.
Analog In does not measure expected voltage	• **Analog In is not calibrated** Contact Service.
Analog Out does not generate expected voltage	• **Analog Out is not calibrated** Contact Service.

Instrument display

Problem	Possible cause and action
Absence of or incorrect colors	• **Display is broken** Generate a System error report and contact Service.

Problem	Possible cause and action
Weak light	• **Display is worn out** Generate a System error report and contact Service.
The internal temperature of the instrument display is too high	• **The main board for the display is overheated** Switch off the instrument and wait until the temperature has decreased. If this error is recurrent, generate a System error report and contact Service.
The cursor on the display touch screen does not move	• **Touch screen is damaged** Generate a System error report and contact Service.
The cursor on the display touch screen does not follow the finger	• **Touch screen is not calibrated** Calibrate touch screen. See *Section 2.5 Instrument display, on page 35*.
The display is black	• **No power** Make sure that the power cord is connected. Make sure that the instrument is on. • **Display is broken** Generate a System error report and contact Service.

8.8 Troubleshooting: Instrument communication

Scenario	Possible cause and action
Error message in UNICORN: ***(Error) The first conductivity monitor has been reported lost by the instrument...***	**Cause**: Conductivity monitor cable is not connected. **Action**: 1 Switch off the instrument. 2 Connect the cable. 3 Switch on the instrument. 4 In the displayed dialog box in UNICORN, select the option ***Restart the system only*** and click ***OK***.
Multiple error messages in UNICORN: ***Lost modules.***	**Cause:** A cable to a module (including module panels) is not connected. **Action**: 1 Switch off the instrument. 2 Check all modules and connections. 3 Switch on the instrument. 4 In the displayed dialog box in UNICORN, select the option ***Restart the system only*** and click ***OK***.
UNICORN has lost communication with the instrument server	• **The UNICORN client has lost connection to the instrument server during a temporary overload of the processor** Restart the UNICORN client to regain control. The run continues and no data will be lost.
Warning message in UNICORN: ***Instrument module is missing.***	**Cause**: The module is not functioning properly. **Action**: 1 In the displayed dialog box in UNICORN, select the option ***Restart the system only*** and click ***OK***. 2 If the problem still remains, replace the module or contact Service.

Scenario	Possible cause and action
Warning messages in UNICORN: ***(Warning) Two instrument modules have the same Node ID***.	**Cause:** Two or several modules have the same Node ID. **Action**: 1 Switch off the instrument. 2 Check the Node ID for all modules, see *Section 9.15 Check and change the Node ID of a module, on page 510*. 3 Switch on the instrument. 4 In the displayed dialog box in UNICORN, select the option ***Restart the system only*** and click ***OK***.
Warning messages in UNICORN: ***(Warning) Gate (12): Internal instrument error.***	**Cause**: One module has an incorrect Node ID. **Action**: 1 Switch off the instrument. 2 Check the Node ID for all modules, see *Section 9.15 Check and change the Node ID of a module, on page 510*. 3 Switch on the instrument. 4 In the displayed dialog box in UNICORN, select the option ***Restart the system only*** and click ***OK***.

8.9 Error codes

Introduction

This section describes the error codes that can appear for the different modules, together with corrective actions.

All modules

Error code	Description	Action
0 - 19	Internal instrument error	Restart the instrument. If recurrent please contact Service.

Instrument control unit

Error code	Description	Action
21 - 69	Internal instrument error	Restart the instrument. If recurrent please contact Service.

Valve

Error code	Description	Action
20, 24	Internal instrument error	Restart the instrument. If recurrent please contact Service.
22	Valve not finding position	Restart the instrument. If recurrent please contact Service.
23	Faulty air sensor	Restart the instrument. If recurrent please contact Service.
25	High temperature	See *Section 8.4 Troubleshooting: Valves, on page 378*

Pressure monitor

Error code	Description	Action
20, 21, 24-27	Internal instrument error	Restart the instrument. If recurrent please contact Service.
23	High temperature	See *Pressure monitors, on page 376*.

Air sensor

Error code	Description	Action
20	High temperature	See *External air sensors, on page 406*.

Mixer

Error code	Description	Action
25	Mixer motor error	Restart the instrument. If recurrent please contact Service.
26	Internal instrument error	Restart the instrument. If recurrent please contact Service.
27	High temperature	See *Mixer, on page 402*

pH monitor

Error code	Description	Action
20, 21	Internal instrument error	Restart the instrument. If recurrent please contact Service.
25	No factory calibration	Contact Service
26	High temperature	See *pH monitor and pH valve, on page 372*.

Conductivity monitor

Error code	Description	Action
20-27	Internal instrument error	Restart the instrument. If recurrent please contact Service.
28	High temperature	See *Conductivity monitor, on page 369*
29	Temperature data error	Restart the instrument. If recurrent please contact Service.
32-34	No factory calibration	Contact Service

Pump

Error code	Description	Action
51-53	Internal pump error	Check that there is no blockage of the pump outlet. Restart the instrument. If recurrent please contact Service.
54	High temperature	See *Section 8.6 Troubleshooting: Pumps, on page 394*

UV Monitor U9-M

Error code	Description	Action
21, 25, 26, 31	Grating error	Restart the instrument. If recurrent please contact Service.
22, 23, 32	Block filter error	Restart the instrument. If recurrent please contact Service.
24	Internal instrument error	Restart the instrument. If recurrent please contact Service.
27	Spectrum calibration error	Restart the instrument. If recurrent please contact Service.

Error code	Description	Action
28, 29	Lamp error	Restart the instrument. If recurrent please contact Service.
30	High temperature	See *UV monitor U9-M and UV detector unit, on page 360*.

UV Detector U9-D

Error code	Description	Action
24, 26, 28, 29, 31, 33	Internal instrument error	Restart the instrument. If recurrent please contact Service.
25	Too low light intensity	Check that the detector and flow cell are fitted correctly. If warning reappears, contact Service.
27	Too high light intensity	Check that the detector and flow cell are fitted correctly. If warning reappears, contact Service.
30	Too high light intensity, R channel	Check that the detector is fitted correctly. If warning reappears, contact Service.
32	Too high S light intensity, S channel	Check that the flow cell is fitted correctly. If warning reappears, contact Service.
34	No light detected	Check optical pathway and restart the instrument. If recurrent please contact Service.
35	Too low light intensity, R channel	Check that the detector is fitted correctly. If warning reappears, contact Service.
36	Too low light intensity, S channel	No light through flow cell. Check solution absorption and that the cell is fitted correctly.

UV Monitor U9-L

Error code	Description	Action
51	High temperature	See *UV monitor U9-L, on page 365*.
52, 55	Low lamp intensity	Contact Service.
54	Autozero out of range	Autozero requested when AU value is larger than 2.
58	Too low light intensity, S channel	No light through flow cell. Check solution absorption and that the cell is fitted correctly.
59, 60	Internal instrument error	Restart the instrument. If recurrent please contact Service.
61	Measurement error	Restart the instrument. If recurrent please contact Service.

Fraction Collector F9-R

Error code	Description	Action
20	High temperature	See *Fraction Collector F9-R, on page 391*
21	DropSync warning	Clean the sensor and remove air bubbles in the flow path.
22	Tube sensor error	Check that the tube sensor is adjusted properly.
23	Delay queue full	Increase the fraction size. Fraction size must be greater than 1/10 of the delay volume.
24, 26	Internal instrument error	Restart the instrument. If recurrent please contact Service.
25, 28	Too fast tube change	Increase the fraction size or lower the flow rate.
27	DropSync error	Clean the drop sensor

Instrument display

Error code	Description	Action
51	High temperature	See *Instrument display, on page 408*

I/O-box

Error code	Description	Action
20	High temperature	See *I/O-box, on page 407*
21	Analog in signal below -2V	Check the external equipment connected to the I/O-box.
22	Analog in signal above 2V	Check the external equipment connected to the I/O-box.
23-28	Internal instrument error	Restart the instrument. If recurrent please contact Service.

9 Reference information

About this chapter

This chapter lists reference details for ÄKTA avant.

Refer to *ÄKTA avant 25 Product Documentation* and *ÄKTA avant 150 Product Documentation* for detailed technical specifications.

In this chapter

This chapter contains the following sections:

Section	See page
9.1 System specifications	419
9.2 Module specifications	421
9.3 Tubing and connectors	429
9.4 Chemical resistance guide	437
9.5 Wetted materials	442
9.6 Predefined methods and phases	444
9.7 System settings	454
9.8 Using Manual instructions	470
9.9 Available Run data	492
9.10 Available Curves	496
9.11 Injection volumes and peak broadening	499
9.12 Delay volumes	500
9.13 Component volumes	504
9.14 Pressure control	507
9.15 Check and change the Node ID of a module	510

9.1 System specifications

Technical specifications

Parameter	Data
System configuration	Benchtop system, external computer
Control system	UNICORN™ 6.3.2 or later version
Connection between PC and instrument	Ethernet
Dimensions (Length x Depth x Height)	860 x 710 x 660 mm
Weight (excluding computer)	116 kg
Power supply	100-240 VAC, 50-60 Hz
Power consumption	800 VA
Enclosure protective class	IP 21, wet side IP 22
Tubing and connectors	ÄKTA avant 25: • Inlet: FEP tubing, inner diameter (i.d.) 1.6 mm, Tubing connector 5/16″ + Ferrule (yellow), 1/8″ • Pump to Injection valve: PEEK tubing, i.d. 0.75 mm, Fingertight connector, 1/16″ • After Injection valve: PEEK tubing, i.d. 0.50 mm, Fingertight connector, 1/16″ • Outlet and waste: ETFE tubing, i.d. 1.0 mm, Fingertight connector, 1/16″ ÄKTA avant 150: • Inlet: FEP tubing, i.d. 2.9 mm, Tubing connector 5/16″ + Ferrule (blue), 3/16″ • After pumps: PEEK tubing, 1.0 mm i.d., Fingertight connector, 1/16″ • Outlet: FEP o.d.1/8″, i.d. 1.6 mm, Tubing connector 5/16″ + Ferrule (yellow), 1/8″ • Waste: ETFE tubing, i.d. 1.0 mm, Fingertight connector, 1/16″

Enviromental requirements

Parameter	Data
Storage and transport temperature range	-25°C to 60°C
Chemical environment	See *Section 9.4 Chemical resistance guide, on page 437*.
Operating temperature range	4°C to 35°C
Relative humidity	20% to 95%, noncondensing

Equipment noise level

Equipment	Acoustic noise level
ÄKTA avant instrument	< 70 dBA

9.2 Module specifications

Introduction

This section specifies the operating data of the components in ÄKTA avant. For general data for the system see *Section 9.1 System specifications, on page 419*.

System pumps

Parameter	Data
Pump type	Piston pump, metering type
Flow rate range (normal range)	ÄKTA avant 25: 0.001 to 25 ml/min ÄKTA avant 150: 0.01 to 150 ml/min
Flow rate range (column packing flow)	ÄKTA avant 25: 0.01 to 50 ml/min ÄKTA avant 150: 0.01 to 300 ml/min
Pressure range	ÄKTA avant 25: 0 to 20 MPa (0 to 200 bar) ÄKTA avant 150: 0 to 5 MPa (0 to 50 bar)
Viscosity range	ÄKTA avant 25: 0.35 to 10 cP ÄKTA avant 150: 0.35 to 5 cP
Flow rate specifications	ÄKTA avant 25: • Accuracy: ± 1.2% • Precision: RSD < 0.5% (Conditions: 0.25 to 25 ml/min, < 3 MPa, 0.8 to 2 cP) ÄKTA avant 150: • Accuracy: ± 1.5% • RSD < 0.5% (Conditions: 1.0 to 150 ml/min, < 3 MPa, 0.8 to 2 cP)

Sample pump

Parameter	Data
Pump type	Piston pump, metering type
Flow rate range	ÄKTA avant 25: 0.001 to 50 ml/min ÄKTA avant 150: 0.01 to 150 ml/min
Pressure range	ÄKTA avant 25:0 to 10 MPa (0 to 100 bar) ÄKTA avant 150: 0 to 5) MPa (0 to 50 bar)
Viscosity range	0.7 to 10 cP
Flow rate specifications	ÄKTA avant 25: • Accuracy: ± 2% • RSD < 0.5% (Conditions: 0.25 to 50 ml/min, < 3 MPa, 0.8 to 3 cP) ÄKTA avant 150: • Accuracy: ± 2% • RSD < 0.5% (Conditions: 1.0 to 150 ml/min, < 3 MPa, 0.8 to 2 cP)

Mixer

Parameter	Data
Mixing principle	Chamber with magnetic stirrer
Mixer volume	ÄKTA avant 25: 0.6, 1.4 (default) or 5 ml ÄKTA avant 150: 1.4, 5 (default) or 15 ml

Gradient formation

Parameter	Data
Gradient flow rate range	ÄKTA avant 25: • Binary: 0.25 to 25 ml/min • Quaternary: 1 to 25 ml/min ÄKTA avant 150: • Binary: 1 to 150 ml/min • Quaternary: 2 to 40 ml/min
Gradient composition accuracy	• Binary: ± 0.6% • Quaternary: ± 1% (Conditions: 5 to 95 B. 0.5 to 25 ml/min, 0.2 to 2 MPa, 0.8 to 2 cP)

Valves

Parameter	Data
Type	Rotary valves
Number of valves	6 standard valves, up to 6 optional valves
Functions	Inlet valve, Sample inlet valve , Injection valve, Column valve, pH valve, Outlet valve
Options	Second Inlet valve, Loop selection valve, Versatile valve, Second Column valve, Extra Outlet valve, Extra Inlet valve

Quaternary valve

Parameter	Data
Type	4-port solenoid actuated membrane valve
Functions	Quaternary gradients or BufferPro

Number of inlets

Parameter	Data
Inlet A	7, expandable to 14
Inlet B	7, expandable to 14
Sample inlet	7, expandable to 14
Quaternary inlet	4

Pressure monitors

Parameter	Data
Number of sensors	4
Placement of sensors	• The System pressure monitor is located after the System pumps. • The Pre-column pressure monitor and the Post-column pressure monitor are integrated in the Column valve **V9-C** or **V9H-C**. • The Sample pressure monitor is located after the Sample pump.
Range	ÄKTA avant 25: 0 to 20 MPa (0 to 200 bar) ÄKTA avant 150: 0 to 5 MPa (0 to 50 bar)
Accuracy	ÄKTA avant 25: ± 0.02 MPa or ± 2% whichever is greater ÄKTA avant 150: ± 0.015 MPa or ± 1.5% whichever is greater

UV monitors

Item	Description
Number of monitors	Up to 2
Wavelength range	**U9-M**: 190 to 700 nm in steps of 1 nm, up to 3 wavelengths **U9-L**: 280 nm
Absorbance range	-6 to 6 AU

Item	Description
Linearity	**U9-M**: within ± 2% at 0 to 2 AU **U9-L**: within ± 5% at 0 to 2 AU
Drift	**U9-M** (2 mm cell at 280 nm): ≤ | 0.2 mAU | AU/h **U9-L** (2 mm cell): ≤ | 0.2 mAU | AU/h
Noise	**U9-M**: < 0.08 mAU **U9-L**: < 0.1 mAU
Operating pressure	0 to 2 MPa
Flow cells: **U9-M**	Standard: Optical path length 2 mm Cell volume 2 µl Total volume: 11 µl Option: Optical path length 10 mm Cell volume 8 µl Total volume 12 µl Optical path length 0.5 mm Cell volume 1 µl Total volume 10 µl
Flow cells: **U9-L**	Standard: Optical path length 2 mm Cell volume 2 µl Total volume: 30 µl Option: Optical path length 5 mm Cell volume 6 µl Total volume 20 µl

Conductivity monitor

Item	Description
Number of monitors	Up to 2
Conductivity reading range	0.01 to 999.99 mS/cm
Accuracy	±0.01 mS/cm or ±2%, whichever is greater, (within 0.3 to 300 mS/cm)
Operating pressure	0 to 5 MPa (0 to 50 bar)
Flow cell volume	22 µl

Temperature monitor integrated in Conductivity monitor

Item	Description
Reading range	0°C to 99°C
Accuracy	±1.5°C within 4°C to 45°C

pH monitor

Parameter	Data
pH reading range	0 to 14
Accuracy	± 0.1 pH unit (within pH 2 to 12, temp. within 3°C from calibration temp.)
Operating pressure	0 to 0.5 MPa (0 to 5 bar)
Flow cell volume	ÄKTA avant 25: 76 µl ÄKTA avant 150: 129 µl

Outlet valve fractionation

Parameter	Data
Number of outlets	10, expandable to 32

Parameter	Data
Fraction volumes	ÄKTA avant 25: 0.1 to 20 000 ml ÄKTA avant 150: 1 to 20 000 ml
Delay volume, with pH electrode and flow restrictor off-line (UV – Outlet valve)	ÄKTA avant 25: 142 µl ÄKTA avant 150: 535 µl

Built-in fraction collector

Item	Description
Number of fractions	Up to 576
Vessel types	• 3, 5, 8, 15, 50 ml tubes • 250 ml bottles • Deep well plates: 96 / 48 / 24
Vessel type selection	Automatic recognition
Fraction volumes	0.1 to 250 ml
Spillage-free modes	ÄKTA avant 25: Automatic, DropSync or accumulator ÄKTA avant 150: Automatic or accumulator
Protection of fractions	Covered vessels and climate control (settable 6°C to 20°C)
Organic solvents	No
Delay volume, with pH electrode and flow restrictor off-line (UV – dispenser head)	ÄKTA avant 25: 518 µl ÄKTA avant 150: 1807 µl

Fraction collector F9-R, 2nd

Parameter	Data
Number of fractions	Up to 175
Vessel types	Tube outer diameter: 12, 18 or 30 mm Tube length: 50 to 180 mm
Fraction volumes	0.1 to 50 ml

Parameter	Data
Spillage-free mode	DropSync
Fractionate flammable liquids	Yes
Delay volume, with pH electrode and flow restrictor off-line (UV – dispenser head)	ÄKTA avant 25: 240 µl ÄKTA avant 150: 928 µl
Dimensions (W x D x H)	320 x 400 x 250 mm
Weight	5 kg

I/O box

Parameter	Data
Number of ports	2 analog in, 2 analog out 4 digital in, 4 digital out
Analog range	In +/- 2 V Out +/- 1 V

9.3 Tubing and connectors

Introduction

This section describes the tubing and connectors to use with ÄKTA avant 25 and ÄKTA avant 150.

Tubing labels

The illustration below shows the tubing labels for for the standard system configuration.

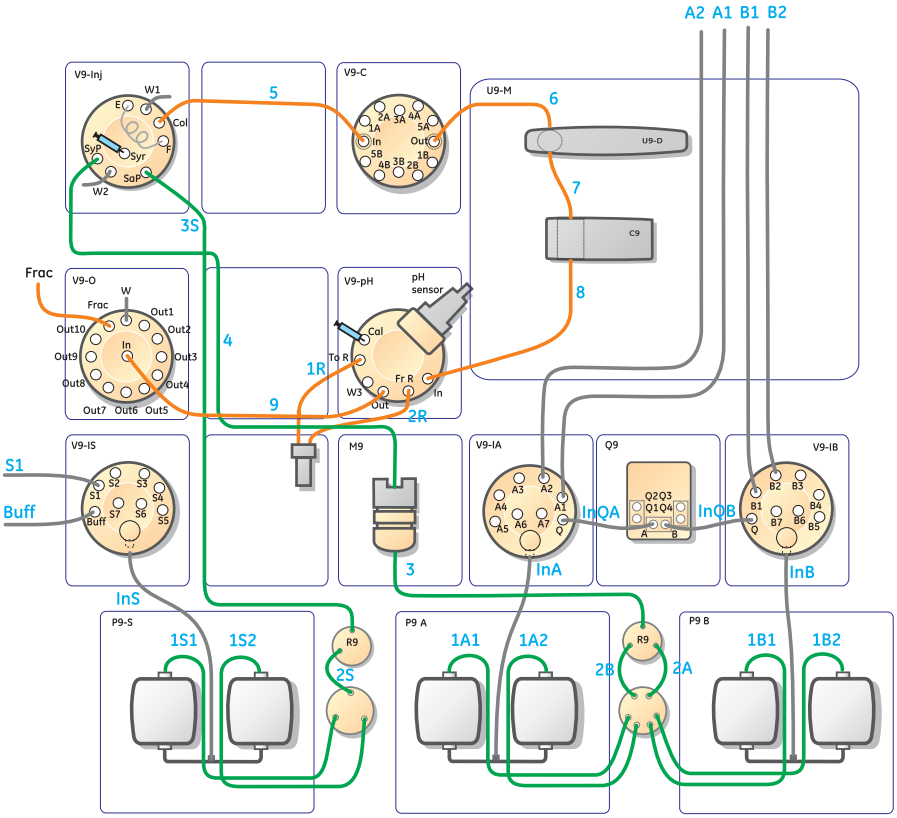

Tubing types

The table below shows the tubing types used in ÄKTA avant.

Description	Color	Scope of use	Volume/cm
PEEK, o.d. 1/16", i.d. 0.25 mm	Blue	High pressure tubing Reference capillary 1	0.5 µl
PEEK, o.d. 1/16", i.d. 0.50 mm	Orange	High pressure tubing	2.0 µl
PEEK, o.d. 1/16", i.d. 0.75 mm	Green	High pressure tubing	4.4 µl
PEEK, o.d. 1/16", i.d. 1.0 mm	Beige	High pressure tubing	7.8 µl
FEP, o.d. 1/8", i.d. 1.6 mm	Transparent	Inlet tubing	20.0 µl
FEP, o.d. 3/16", i.d. 2.9 mm	Transparent	Inlet tubing for high flow rate and high viscosity	66.0 µl
ETFE, o.d. 1/16", i.d. 0.75 mm	Transparent	Narrow inlet tubing (optional)	4.4 µl
ETFE, o.d. 1/16", i.d. 1.0 mm	Transparent	Outlet and waste tubing	7.8 µl
Silicone, o.d. 4.1 mm, i.d. 2.1 mm	Transparent	Pump rinse solution tubing	35.0 µl
Silicone, o.d. 12 mm, i.d. 8 mm	Transparent	Waste tubing from Buffer tray	0.5 ml

Note: *Many different sizes/types of tubing can be connected to a chromatography system. Tubing with a smaller inner diameter (i.d.) holds less delay volume and will therefore generate less dilution of the protein peak. Narrow tubing, however, increases the system pressure, especially when running at high flow rates. The tubing used should match the application needs.*

Tubing connectors

The table below shows the tubing connectors used in ÄKTA avant.

Description	Use with tubing...
Fingertight connector, 1/16"	PEEK and ETFE with o.d. 1/16"

Description	Use with tubing...
Tubing connector 5/16" + Ferrule (blue), 1/16"	ETFE, o.d. 1/16", i.d. 0.75 mm
Tubing connector 5/16" + ferrule (blue) 3/16"	FEP o.d. 3/16" i.d. 2.9 mm
Tubing connector 5/16" + Ferrule (yellow), 1/8"	FEP, o.d. 1/8", i.d. 1.6 mm

Other connectors

The table below shows other connectors used in ÄKTA avant.

Description	Scope of use
Stop plug 1/16" male	Stop plug for valve ports
Luer female to 1/16" male	Syringe connector for pH valve and Injection valve

Inlet tubing

The table below shows the labels, standard diameters, and standard lengths of the inlet tubing.

Label	Description	Tubing		Length (mm)	Volume (ml)	
		ÄKTA avant 25	ÄKTA avant 150		ÄKTA avant 25	ÄKTA avant 150
A1 to **A7**	Inlets to Inlet valve A	FEP, o.d. 1/8", i.d. 1.6 mm	FEP, o.d. 3/16", i.d. 2.9 mm	1500	3.0	9.9
B1 to **B7**	Inlets to Inlet valve B	FEP, o.d. 1/8", i.d. 1.6 mm	FEP, o.d. 3/16", i.d. 2.9 mm	1500	3.0	9.9
InA	Inlet valve A to System pump A	FEP, o.d. 1/8", i.d. 1.6 mm	FEP, o.d. 3/16", i.d. 2.9 mm	300	0.6	2.0
InB	Inlet valve B to System pump B	FEP, o.d. 1/8", i.d. 1.6 mm	FEP, o.d. 3/16", i.d. 2.9 mm	300	0.6	2.0

Label	Description	Tubing		Length (mm)	Volume (ml)	
		ÄKTA avant 25	ÄKTA avant 150		ÄKTA avant 25	ÄKTA avant 150
S1 to **S7** [1]	Inlets to Sample inlet valve	FEP, o.d. 1/8", i.d. 1.6 mm	FEP, o.d. 3/16", i.d. 2.9 mm	1000	2.0	6.6
Q1 to **Q4**	Inlets to Quaternary valve	FEP, o.d. 1/8", i.d. 1.6 mm	FEP, o.d. 1/8", i.d. 1.6 mm	1500	3.0	9.9
InQA	Quatenary valve to Inlet valve A	FEP, o.d. 1/8", i.d. 1.6 mm	FEP, o.d. 1/8", i.d. 1.6 mm	1500	3.0	9.9
InQB	Quatenary valve to Inlet valve B	FEP, o.d. 1/8", i.d. 1.6 mm	FEP, o.d. 1/8", i.d. 1.6 mm	1500	3.0	9.9
Buff	Inlet to Sample inlet valve	FEP, o.d. 1/8", i.d. 1.6 mm	FEP, o.d. 3/16", i.d. 2.9 mm	1000	2.0	6.6
InS	Sample inlet valve to Sample pump	FEP, o.d. 1/8", i.d. 1.6 mm	FEP, o.d. 3/16", i.d. 2.9 mm	580	1.2	3.8

1 Narrow inlet tubing, ETFE, o.d. 1/16", i.d. 0.75 mm (28-9572-17), is available for **S1**-**S7**.

High pressure tubing

The tables below shows the labels, standard diameters, and standard lengths of the standard high pressure tubing and the optional high pressure tubing.

Standard high pressure tubing

Label	Description	Tubing		Length (mm)	Volume (µl)	
		ÄKTA avant 25	ÄKTA avant 150		ÄKTA avant 25	ÄKTA avant 150
1A1	System pump A left to Restrictor A	PEEK, o.d. 1/16", i.d. 0.75 mm	PEEK, o.d. 1/16", i.d. 1.0 mm	340	150	270

Label	Description	Tubing		Length (mm)	Volume (µl)	
		ÄKTA avant 25	ÄKTA avant 150		ÄKTA avant 25	ÄKTA avant 150
1A2	System pump A right to Restrictor A	PEEK, o.d. 1/16", i.d. 0.75 mm	PEEK, o.d. 1/16", i.d. 1.0 mm	340	150	270
2A	Restrictor A to Pressure monitor	PEEK, o.d. 1/16", i.d. 0.75 mm	PEEK, o.d. 1/16", i.d. 1.0 mm	115	50	90
1B1	System pump B left to Restrictor B	PEEK, o.d. 1/16", i.d. 0.75 mm	PEEK, o.d. 1/16", i.d. 1.0 mm	340	150	270
1B2	System pump B right to Restrictor B	PEEK, o.d. 1/16", i.d. 0.75 mm	PEEK, o.d. 1/16", i.d. 1.0 mm	340	150	270
2B	Restrictor B to Pressure monitor	PEEK, o.d. 1/16", i.d. 0.75 mm	PEEK, o.d. 1/16", i.d. 1.0 mm	115	50	90
1S1	Sample pump left to Restrictor S	PEEK, o.d. 1/16", i.d. 0.75 mm	PEEK, o.d. 1/16", i.d. 1.0 mm	340	150	270
1S2	Sample pump right to Restrictor S	PEEK, o.d. 1/16", i.d. 0.75 mm	PEEK, o.d. 1/16", i.d. 1.0 mm	340	150	270
2S	Restrictor S to Sample pressure monitor	PEEK, o.d. 1/16", i.d. 0.75 mm	PEEK, o.d. 1/16", i.d. 1.0 mm	115	50	90
3S	Sample pressure monitor to injec-tion valve.	PEEK, o.d. 1/16", i.d. 0.75 mm	PEEK, o.d. 1/16", i.d. 1.0 mm	530	230	420
3	Pressure monitor to Mixer	PEEK, o.d. 1/16", i.d. 0.75 mm	PEEK, o.d. 1/16", i.d. 1.0 mm	400	180	310
4	Mixer to Injection valve	PEEK, o.d. 1/16", i.d. 0.75 mm	PEEK, o.d. 1/16", i.d. 1.0 mm	200	90	160

Label	Description	Tubing		Length (mm)	Volume (µl)	
		ÄKTA avant 25	ÄKTA avant 150		ÄKTA avant 25	ÄKTA avant 150
5	Injection valve to Column valve	PEEK, o.d. 1/16", i.d. 0.50 mm	PEEK, o.d. 1/16", i.d. 1.0 mm	160	30	130
6	Column valve to UV monitor	PEEK, o.d. 1/16", i.d. 0.50 mm	PEEK, o.d. 1/16", i.d. 1.0 mm	160	30	130
7	UV monitor to Conductivity monitor	PEEK, o.d. 1/16", i.d. 0.50 mm	PEEK, o.d. 1/16", i.d. 1.0 mm	170	30	130
8	Conductivity monitor to pH valve	PEEK, o.d. 1/16", i.d. 0.50 mm	PEEK, o.d. 1/16", i.d. 1.0 mm	165	30	130
1R	pH valve to flow restrictor	PEEK, o.d. 1/16", i.d. 0.50 mm	PEEK, o.d. 1/16", i.d. 1.0 mm	75	10	60
2R	Flow restrictor to pH valvel	PEEK, o.d. 1/16", i.d. 0.50 mm	PEEK, o.d. 1/16", i.d. 1.0 mm	75	10	60
9	pH valve to Outlet valve	PEEK, o.d. 1/16", i.d. 0.50 mm	PEEK, o.d. 1/16", i.d. 1.0 mm	215	40	170
Frac	Outlet valve to Fraction collector F9-R	PEEK, o.d. 1/16", i.d. 0.50 mm	PEEK, o.d. 1/16", i.d. 1.0 mm	500	100	400
	Outlet valve to Fraction collector F9-C	PEEK, o.d. 1/16", i.d. 0.50 mm	PEEK, o.d. 1/16", i.d. 1.0 mm	500	100	400

Optional high pressure tubing

Label	Description	Tubing		Length (mm)	Volume (µl)	
		ÄKTA avant 25	ÄKTA avant 150		ÄKTA avant 25	ÄKTA avant 150
L1	Injection valve port **LoopF** to Loop valve port **F**	PEEK, o.d. 1/16", i.d. 0.50 mm	PEEK, o.d. 1/16", i.d. 1.0 mm	160	30	130
L2	Injection valve port **LoopE** to Loop valve port **E**	PEEK, o.d. 1/16", i.d. 0.50 mm	PEEK, o.d. 1/16", i.d. 1.0 mm	160	30	130
5C1 [1]	Injection valve to Column valve	PEEK, o.d. 1/16", i.d. 0.50 mm	PEEK, o.d. 1/16", i.d. 1.0 mm	100	20	80
5C2 [1]	Column valve to second Column valve	PEEK, o.d. 1/16", i.d. 0.50 mm	PEEK, o.d. 1/16", i.d. 1.0 mm	100	20	80
10 [1]	Standard Outlet valve to second Outlet valve	PEEK, o.d. 1/16", i.d. 0.50 mm	PEEK, o.d. 1/16", i.d. 1.0 mm	220	40	170
11 [1]	Second Outlet valve to third Outlet valve	PEEK, o.d. 1/16", i.d. 0.50 mm	PEEK, o.d. 1/16", i.d. 1.0 mm	220	40	170
L	External air sensor **L9-1.5** to Sample inlet valve	FEP, o.d. 1/8", i.d. 1.6 mm	FEP, o.d. 1/8", i.d. 1.6 mm	220	440	440
5L1 [1]	Injection valve to **L9-1.2**	PEEK, o.d. 1/16", i.d. 0.50 mm	PEEK, o.d. 1/16", i.d. 1.0 mm	100	20	80
5L2 [1]	External Air sensor **L9-1.2** to Column valve	PEEK, o.d. 1/16", i.d. 0.50 mm	PEEK, o.d. 1/16", i.d. 1.0 mm	100	20	80

1 Cut the spare piece of tubing delivered with the system to correct length.

Reference tubing

The table below shows the label, diameter, and standard length of the reference capillary. The capillary is used during the System performance tests. The capillary is not mounted at delivery.

Label	Description	Tubing	Length (mm)	Volume (µl)
Ref 1	Reference capillary	PEEK, o.d. 1/16", i.d. 0.25 mm	400	20

Outlet tubing

The table below shows the labels, diameters, and standard lengths of the outlet tubing. The tubing is not mounted on delivery.

Label	Description	Tubing	Length (mm)	Volume (ml)
Out1 - **Out32**	Outlets from Outlet valve **V9-O** or **V9H-O**	V9-O: ETFE, o.d. 1/16", i.d. 1.0 mm V9H-O: FEP o.d.1/8", i.d. 1.6 mm	1500	1.2 3.0

Waste tubing

The table below shows the labels, diameters, and standard lengths of the waste tubing. The waste tubing is mounted on delivery.

Label	Description	Tubing	Length (mm)	Volume (ml)
W1	System pump waste	ETFE, o.d. 1/16", i.d. 1.0 mm	1500	1.2
W2	Sample pump waste	ETFE, o.d. 1/16", i.d. 1.0 mm	1500	1.2
W3	pH valve waste	ETFE, o.d. 1/16", i.d. 1.0 mm	1500	1.2
W	System waste	ETFE, o.d. 1/16", i.d. 1.0 mm	1500	1.2
N/A	Top tray waste	Silicone, o.d. 12 mm, i.d. 8 mm	1500	80
N/A	Fraction collector F9-C waste	Silicone, o.d. 12 mm, i.d. 8 mm	1350	70

9.4 Chemical resistance guide

Introduction

This section specifies the chemical resistance of the ÄKTA avant instrument to some of the most commonly used chemicals in liquid chromatography.

Biocompatibility

The ÄKTA avant instrument is designed for maximum biocompatibility, with biochemically inert flow paths constructed mainly from titanium, PEEK and highly resistant fluoropolymers and fluoroelastomers. Titanium is used as far as possible to minimize contribution of potentially deactivating metal ions such as iron, nickel and chromium. There is no standard stainless steel in the flow path. Plastics and rubber materials are selected to avoid leakage of monomers, plasticizers or other additives.

Cleaning chemicals

Strong cleaning works well with 2 M sodium hydroxide, 70% acetic acid or the alcohols methanol, ethanol and isopropyl alcohol. Complete system cleaning using 1 M hydrochloric acid should be avoided in order to not damage the pressure sensors. If you are cleaning separation media using 1 M hydrochloric acid, use loop injections of the acid and make sure that the column is not mounted on the Column Valve **V9-C**. The Column Valve **V9-C** contains a pressure sensor which can be damaged by 1 M hydrochloric acid.

Long time use of 0.2 M HCl connected to the Quaternary Valve **Q9** as part of a ***BufferPro*** recipe is acceptable. The solution becomes diluted further down in the system.

If sodium hypochlorite is used as sanitizing agent instead of 2 M sodium hydroxide, use a concentration up to 10%.

Organic solvents

Reversed phase chromatography of proteins works well with 100% acetonitrile and additives trifluoroacetic acid (TFA) up to 0.2% or formic acid up to 5%.

Strong organic solvents like ethyl acetate, 100% acetone or chlorinated organic solvents should be avoided. These might cause swelling of plastic material and reduce the pressure tolerance of PEEK tubing. For this reason, flash chromatography and straight (“normal”) phase chromatography is generally not recommended on the system

Assumptions made

The ratings are based on the following assumptions:

- Synergy effects of chemical mixtures have not been taken into account.
- Room temperature and limited overpressure is assumed.

Note: *Chemical influences are time and pressure dependent. Unless otherwise stated, all concentrations are 100%.*

List of chemicals

Note: *A user can be exposed to large volumes of chemical substances over a long time period. Material Safety Data Sheets (MSDS) provide the user with information regarding characteristics, human and environmental risks and preventive measures. Make sure that you have the MSDS available from your chemical distributor and/or databases on the internet.*

Aqueous buffers

Continuous use.

Chemical	Concentration	CAS no/EC no
Aqueous buffers pH 2-12	N/A	N/A

Strong chemicals and salts for CIP

Up to 2 h contact time at room temperature.

Chemical	Concentration	CAS no/EC no
Acetic acid	70%	75-05-8/ 200-835-2
Decon™ 90	10%	N/A
Ethanol	100%	75-08-1/ 200-837-3
Methanol	100%	67-56-1/ 200-659-6
Hydrochloric acid [1]	0.1 M	7647-01-0/ 231-595-7
Isopropanol	100%	67-63-0/ 200-661-7
Sodium hydroxide	2 M	1310-73-2/ 215-185-5
Sodium hydroxide/ethanol	1 M/40%	N/A

Chemical	Concentra-tion	CAS no/EC no
Sodium chloride	4 M	7647-14-5/ 231-598-3
Sodium hypochlorite	10%	7681-52-9/231-668-3

1 If hydrochloric acid, HCl, is used as a cleaning agent when columns are connected to the system, the HCl concentration should not exceed 0.1 M in the pressure sensors. Remember that the ÄKTA avant system has pressure sensors in the column valve **V9-C**.

For other parts of the system up to 1 M HCl is acceptable for short periods of use. See *Cleaning chemicals, on page 437*

Solubilization and denaturing agents

Continuous use, as additives in separation and purification methods

Chemical	Concentra-tion	CAS no/EC no
Guanidinium hydrochloride	6 M	50-01-1/ 200-002-3
Sodium dodecyl sulfate (SDS)	1%	151-21-3/ 205-788-1
TRITON™ X-100	1%	9002-93-1
Tween™ 20	1%	9005-64-5/ 500-018-3
Urea	8 M	57-13-6/ 200-315-5

Chemicals used in reversed phase chromatography (RPC)

Continuous use.

Chemical	Concentration	CAS no/EC no
Acetonitrile [1]	100%	75-05-8/ 200-835-2
Acetonitrile/Tetrahydrofuran[1]	85%/15%	109-99-9/ 203-726-8
Acetonitrile/water/Trifluoroacetic acid (TFA) [2]	Max 0.2% TFA	N/A
Ethanol	100%	75-08-1/ 200-837-3
Isopropanol	100%	67-63-0/ 200-661-7
Methanol	100%	74-93-1/ 200-659-6
Water/organic mobile phase/formic acid	Max 5% formic acid	N/A

1 Organic solvents can penetrate weaknesses in PEEK tubing walls more easily than water based buffers. Special care should therefore be taken with prolonged use of organic solvents close to pressure limits.

Note: *Quaternary valve is not resistant.*

Depending on pressure, tubing between pump head and pressure monitor needs to be changed. See *Section 7.8.1 Replace tubing and connectors, on page 333* for more information.

2 Mobile phase system

Note: *It is recommended to replace the mixer sealing ring with the highly resistant O-ring (product code 29-0113-26) if the system is to be exposed to organic solvents or high concentrations of organic acids, such as acetic acid and formic acid, for a longer period of time.*

Salts and additives for hydrophobic interaction chromatography (HIC)

Continuous use.

Chemical	Concentration	CAS no/EC no
Ammonium chloride	2 M	12125-02-9/ 235-186-4
Ammonium sulfate	3 M	7783-20-2/ 231-984-1
Ethylene glycol	50%	107-21-1/ 203-473-3
Glycerol	50%	56-81-5/ 200-289-5

Reducing agents and other additives

Continuous use.

Chemical	Concentration	CAS no/EC no
Arginine	2 M	74-79-3/ 200-811-1
Benzyl alcohol	2%	100-51-6/ 202-859-9
Dithioerythritol (DTE)	100 mM	3483-12-3 / 222-468-7
Dithiothreitol (DTT)	100 mM	3483-12-3 / 222-468-7
Ethylenediaminetetraacetic acid (EDTA)	100 mM	60-00-4/ 200-449-4
Mercaptoethanol	20 mM	37482-11-4/ 253-523-3
Potassium chloride	4 M	7447-40-7/ 231-211-8

Other substances

Chemical	Concentration	CAS no/EC no
Acetone	10%	67-64-1/ 200-662-2
Ammonia	30%	7664-41-7/ 231-635-3
Dimethyl sulphoxide (DMSO)	5%	67-68-5/ 200-664-3
Ethanol for long-term storage	20%	75-08-1/ 200-837-3
Phosphoric acid	0.1 M	7664-38-2/ 231-633-2

9.5 Wetted materials

Introduction

The tables below list the materials that come into contact with process fluids in the ÄKTA avant system.

Note: *For more detailed material information, see ÄKTA avant 25 Product Documentation and ÄKTA avant 150 Product Documentation.*

Primary flow path

Material	Abbreviation
Ethylene ChloroTriFluoroEthylene	ECTFE
Ethylene TetraFluoroEthylene	ETFE
Fluorinated Ethylene Propylene	FEP
Fluorinated Propylene Monomer	FPM/FKM
Fully Fluorinated Propylene Monomer	FFPM/FFKM
PolyChloroTriFluoroEthylene	PCTFE
PolyEtherEtherKetone	PEEK
PolyPropylene	PP
PolyTetraFluoroEthylene	PTFE
UltraHighMolecularWeightPolyEthylene	UHMWPE
Aluminum oxide	Alumina
Elgiloy	
Hastelloy™ C-276	
Quartz glass	
Ruby	
Sapphire	
Titanium grade 2	

Material	Abbreviation
Titanium grade 5 [1]	

1 Used in pressure sensors only.

Pump rinse system

Material	Abbreviation
EthylenePropyleneDiene M-class rubber	EPDM
PolyEtherEtherKetone	PEEK
PolyPropylene	PP
PolyPhenylene Sulfide	PPS
PolyVinylidene DiFluoride	PVDF
Silicone	

9.6 Predefined methods and phases

Introduction

A predefined method contains a set of phases, each phase reflecting a specific stage of a chromatography or maintenance run. You can select additional phases from the phase libraries and add these to an existing method, or remove phases that are not required.

The predefined purification methods have default values with suitable running conditions for the chosen column type such as flow and pressure limits. Other settings (e.g., sample application technique, sample volume, elution profile and fractionation) are set on the ***Phase Properties*** pane in the appropriate phases.

Predefined purification methods

The ***Method Editor*** has predefined methods for different separation techniques. The methods include a number of relevant phases.

The following table describes the available predefined purification methods and which phases that are included.

Predefined purification method	Principle	Included phases
Affinity Chromatography (AC)	After equilibration and sample application, the protein of interest is adsorbed to the column ligand. After a wash to remove unbound sample, elution is performed either by using a buffer containing a competitor to displace the protein of interest, or by changing the pH or ionic strength. After column re-equilibration, a fraction collector accumulator wash is done to minimize the risk for salt precipitation.	

Predefined purification method	Principle	Included phases
Anion Exchange Chromatography (AIEX)	After equilibration and sample application, negatively charged proteins are adsorbed to the column ligand. After a wash, to remove unbound sample, elution is performed using a gradient of increasing salt concentration (e.g. NaCl). After column wash and re-equilibration, a fraction collector accumulator wash is done to minimize the risk for salt precipitation.	
Cation Exchange Chromatography (CIEX)	After equilibration and sample application, positively charged proteins are adsorbed to the column ligand. After a wash, to remove unbound sample, elution is performed using a gradient of increasing salt concentration (e.g. NaCl). After column re-equilibration, a fraction collector accumulator wash is done to minimize the risk for salt precipitation.	

Predefined purification method	Principle	Included phases
Chromatofocusing (CF)	After equilibration and sample application, elution is performed using a pH gradient. The proteins separate and elute according to their isoelectric points. Finally, the column is re-equilibrated.	
Desalting	After equilibration and sample application, the proteins are eluted isocratically. This technique is commonly used for buffer exchange.	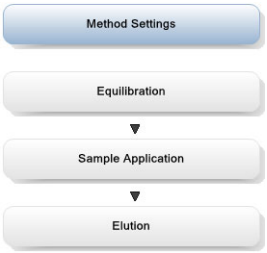
Gel filtration (GF)	After equilibration and sample application, proteins separate and elute according to their size (largest first).	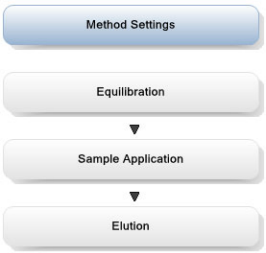

Predefined purification method	Principle	Included phases
Hydrophobic Interaction Chromatography (HIC)	After equilibration and sample application (use a buffer containing a high salt concentration, e.g, 2 M Ammonium Sulphate) hydrophobic proteins are adsorbed to the column ligand. After a wash to remove unbound sample, elution is performed using a gradient of decreasing salt concentration. Then, the column is washed and re-equilibrated with start buffer. After column re-equilibration, a fraction collector accumulator wash is done to minimize the risk for salt precipitation.	
Manual Loop Fill	The sample application loops of the loop valve are manually filled with samples. The method will guide the user through the process by pausing and displaying on-screen instructions. Up to five loops can be filled with different samples. The loops are filled in descending order. Partial or complete loop fill can be chosen. Automatic washing of loops and flow path are integrated in the method. The required components for this phase are a column valve and a loop valve.	

Predefined purification method	Principle	Included phases
Reversed Phase Chromatography (RPC)	After equilibration and sample application, hydrophobic proteins adsorb to the column ligand. After a wash to remove unbound sample, elution is performed by generating a gradient of a non-polar, organic solvent such as acetonitrile. Finally, the column is washed and re-equilibrated.	

WARNING

Fraction collector. Do **not** fractionate flammable liquids in the built-in fraction collector. When running RPC methods, collect fractions through the outlet valve or the optional external Fraction collector **F9-R**.

Predefined maintenance methods

A number of predefined methods for preparation and cleaning are available. These maintenance methods are used to prepare the system, clean the system, and to fill the system with storage solution.

The following table describes the available predefined maintenance methods.

Predefined maintenance method	Principle	Included phases
Column CIP	The column is filled with a cleaning solution. Select inlet positions. Enter the solution identity, volume, flow rate and incubation time. By adding steps, several cleaning solutions can be used. Suggestions for cleaning steps are available for a number of column types.	
Column Performance Test	After equilibration of the column, sample is injected via a loop and eluted isocratically. A non-adsorbing sample like acetone or salt should be used. After the run, calculate column performance in the ***Evaluation*** module. The efficiency of the column is determined in terms of height equivalent to a theoretical plate (HETP), and the peak asymmetry factor (A_S). The result is logged in the column logbook.	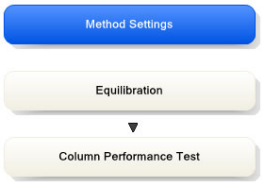
Column Preparation	The column is filled with buffer solution. Select inlet positions. Enter the solution identity, volume, flow rate and incubation time. By adding steps, several preparation solutions can be used.	
Intelligent Packing (only available for ÄKTA avant 150)	Packs AxiChrom™ columns, with a predetermined column type, by motorized power or by a flow of hydraulic liquid that pushes the adaptor down. The user initiates the start of compression at the exact point when the adapter reaches the consolidated bed surface. The adapter compresses the bed according to the packing factor or target bed height as selected. Two Column Performance Test phases (upflow and/or downflow) can be performed after the AxiChrom column has been packed.	

Predefined maintenance method	Principle	Included phases
System CIP	The system is filled with cleaning solution. Select for example inlets, outlets and column positions to be cleaned. Three ***System CIP*** phases are included in the method to facilitate the use of three different cleaning solution. Additional ***System CIP*** phases can be added from the ***Phase Library*** if desired.	
System Preparation	The system is filled with preparation solution. Select for example inlets, outlets and column positions to be prepared. Two ***System Preparation*** phases are included in the method. Additional ***System Preparation*** phases can be added from the ***Phase Library*** if desired.	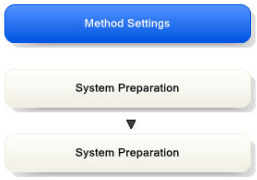

Predefined phases

The following table describes the predefined phases.

Phase Name	Description
Method Settings	The first, and mandatory, phase in any method. Defines common parameters used in the subsequent phases. The ***Method Settings*** phase defines: 1 Column type ***Note:*** *The **Column type** list can be filtered in two steps:* • *Select the chromatography technique to be used in the list **Show by technique*** • *Select **Show only suggested columns** to show the columns that are suggested for the selected chromatography technique.* 2 Pressure limit 3 Flow rate 4 Option to control the flow to avoid overpressure ***Note:*** *Default values for pressure limits and flow rate are given for the selected column type.* • Column position • Flow restrictor use • Buffer preparation: - Manual, or - BufferPro (automatic buffer preparation)

Phase Name	Description
	• Unit selection for Method base and Flow rate • Monitor settings: - pH monitor - Air sensor alarm settings - UV monitor ***Note:*** *The first wavelength of U9-M and the fixed wavelength for U9-L or U9-L 2nd is always turned on. The second and third wavelengths for UV monitor U9-M can be set on or off.* • Settings for Column Logbook • Start Protocol • Result name and location ***Note:*** *Some of these options may not be required by certain methods.* ***Note:*** *The **Method Settings** phase differs for systems that have the Method settings phase and the User defined phase as the only available predefined phases.*
Column CIP	Cleans the column after purification runs by rinsing the column with a cleaning solution to remove non-specifically bound proteins. By adding steps, several cleaning solutions can be used sequentially.
Column Performance Test	Tests the efficiency of a packed column in terms of height equivalent to a theoretical plate (HETP), and the peak asymmetry factor (A_S).
Column Preparation	Prepares the column before use by removing the storage solution and equilibrating the column. By adding steps, several preparation solutions can be used sequentially.
Column Wash	Washes out unbound sample after sample application or removes strongly bound proteins after elution.
Elution	Elutes the sample from the column. Defines parameters for the elution and fractionation settings.

Phase Name	Description
Equilibration	Equilibrates the column before purification, or re-equilibrates the column after purification.
Manual Loop Fill	Is used to manually fill the additional sample application loops mounted on the loop valve. The filling options are: • Partial loop fill • Complete loop fill
Miscellaneous	Can be added to any method at suitable places. The instructions can help the user to better organize the graphical output of the results or introduce a controlled delay in the method run.
Sample Application	Applies sample to the column. Defines the sample application technique, the sample volume, and the handling of flowthrough.
System CIP	Cleans the system after purification runs by rinsing the system with a cleaning solution. One cleaning solution is used per phase.
System Preparation	Prepares the system before a run by removing storage solution and filling the system and inlets with buffer solution. One preparation solution is used per phase.
Intelligent Packing	A flow of hydraulic liquid pushes the adapter down. The user initiates the start of compression at the exact point when the adapter reaches the consolidated bed surface. The adapter compresses the bed according to the packing factor or target bed height as selected. Only available for some systems and some types of AxiChrom columns.

9.7 System settings

The ***System Settings*** function is used to set the parameters for the available instructions. The ***Edit*** dialog box in which to edit the system settings are shown below.

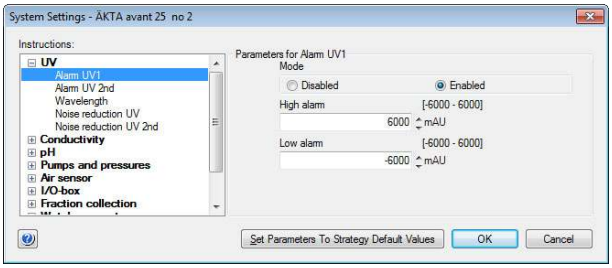

The following subsections list the system settings available for ÄKTA avant.

Section	See page
9.7.1 System settings - UV	455
9.7.2 System settings - Conductivity	456
9.7.3 System settings - pH	458
9.7.4 System settings - Pumps and pressures	459
9.7.5 System settings - Air sensor	461
9.7.6 System settings - I/O-box	462
9.7.7 System settings - Fraction collection	463
9.7.8 System settings - Watch parameters	466
9.7.9 System settings - Advanced	467
9.7.10 System settings - Data collection	469

9.7.1 System settings - UV

The following table describes the UV related system settings available for ÄKTA avant.

Instruction name	Description
Alarm UV1	Enables or disables the alarm for the UV 1 signal from UV monitor U9-M. When enabled, it sets the alarm limits for the UV 1 signal. When the signal falls outside the set limits, an alarm is issued and the method will be paused. ***Note:*** *It is not possible to set an alarm signal for the UV 2 or UV 3 signals from UV monitor U9-M.*
Alarm UV 2nd	Enables or disables the alarm for the UV signal from U9-L, 2nd. When enabled, it sets the alarm limits for the UV signal from UV monitor U9-L, 2nd. When the signal falls outside the set limits, an alarm will be triggered and the method will be paused.
Wavelength	Sets the wavelengths for UV monitor U9-M. The corresponding curves in the chromatogram are marked with the set wavelengths. ***Note:*** • *The instruction is available when UV monitor U9-M (variable) is selected in the component list. For best performance, do not use more wavelengths than necessary for the application.* • *At low wavelengths, the eluent can have significant absorbance of its own.*
Noise reduction UV	Filters the noise in the UV signal from U9-M or U9-L (depending on the configuration). A column-specific averaging time is set automatically when a column is defined in a method run and ***Averaging time*** is set as a variable.
Noise reduction UV 2nd	Filters the noise in the UV signal from U9-L, 2nd. A column-specific averaging time is set automatically when a column is defined in a method run and ***Averaging time*** is set as a variable.

9.7.2 System settings - Conductivity

The following table describes the conductivity related system settings available for ÄKTA avant.

Instruction name	Description
Alarm conductivity	Enables or disables the conductivity alarm. When enabled, it sets the alarm limits for the conductivity signal. When the conductivity falls outside the set limits, an alarm will be triggered and the method will be paused.
Alarm conductivity 2nd	Enables or disables the conductivity alarm for the second conductivity monitor. When enabled, it sets the alarm limits for the conductivity signal. When the conductivity falls outside the set limits, an alarm will be triggered and the method will be paused.
Relative scale cond	Facilitates monitoring of a gradient, for which the user sets the conductivity values for 0% and 100%. The ***Relative scale cond*** can be set in ascending manner (0% for low and 100% for high conductivity) or in descending manner (0% for high and 100% for low conductivity). ***Note:*** *The **Relative scale cond** in descending manner is especially useful for conductivity visualization in RPC and HIC, where the conductivity curve is reversed compared to the concentration curve (i.e., high conductivity at 0% B and low conductivity at 100% B).*
Relative scale cond 2nd	Facilitates monitoring, using the second conductivity monitor, of a gradient, for which the user sets the conductivity values for 0% and 100%. The ***Relative scale cond*** can be set in ascending manner (0% for low and 100% for high conductivity) or in descending manner (0% for high and 100% for low conductivity). ***Note:*** *The **Relative scale cond** in descending manner is especially useful for conductivity visualization in RPC and HIC, where the conductivity curve is reversed compared to the concentration curve (i.e., high conductivity at 0% B and low conductivity at 100% B).*

Instruction name	Description
Cond temp condensation	Is used to adjust the conductivity values to a reference temperature in order to compare conductivity values between runs that have been performed at different temperatures. Setting the compensation factor to 0% turns this function off.
Cond 2nd temp condensation	Is used to adjust the conductivity values for the second conductivity monitor to a reference temperature in order to compare conductivity values between runs that have been performed at different temperatures. Setting the compensation factor to 0% turns this function off.

9.7.3 System settings - pH

The table below describes the pH related system settings available for ÄKTA avant.

Instruction name	Description
Alarm pH	Enables or disables the pH alarm. When enabled, it sets the alarm limits for the pH signal. When the pH falls outside the set limits, an alarm will be triggered and the method will be paused.

9.7.4 System settings - Pumps and pressures

The following table describes the pressure alarm related system settings available for ÄKTA avant.

Instruction name	Description
Alarm system pressure	Sets the alarm limits for the system pressure. When enabled and the system pressure falls outside the set pressure limits, an alarm will be triggered and the method will be paused. Default values for the alarm limits are set by the values in the column list when a column is selected in the method and ***Alarm system pressure*** is set as a variable. ***Low alarm*** is only triggered if the pressure first exceeds the ***Low alarm*** limit for ten seconds continuously and then falls below the ***Low alarm*** limit. ***Note:*** *Setting the **Low alarm** or the system flow rate to 0 deactivates the low pressure alarm.*
Alarm sample pressure	Sets the alarm limits for the sample pressure. When enabled and the sample pressure falls outside the set pressure limits, an alarm will be triggered and the method will be paused. Default values for the alarm limits are set by the values in the column list when a column is selected in the method and ***Alarm sample pressure*** is set as a variable. ***Low alarm*** is only triggered if the pressure first exceeds the ***Low alarm*** limit for ten seconds continuously and then falls below the ***Low alarm*** limit. ***Note:*** *Setting the **Low alarm** or the system flow rate to 0 deactivates the low pressure alarm.*

Instruction name	Description
Alarm delta column pressure	Sets the alarm limits for the delta column pressure (pre-column pressure minus post-column pressure). When enabled and the delta column pressure falls outside the set pressure limits, an alarm will be triggered and the method will be paused. ***Low alarm*** is only triggered if the pressure first exceeds the ***Low alarm*** limit for ten seconds continuously then falls below the ***Low alarm*** limit. ***Note:*** • *Setting the **Low alarm** to 0 deactivates the low pressure alarm.* • *Instruction **Alarm delta column pressure** is available only when Column valve **V9-C** or **V9H-C** (5-columns) is selected in the component list.*
Alarm pre column pressure	Sets the alarm limits for the pre column pressure. When enabled and the pre column pressure falls outside the set pressure limits, an alarm is issued and the method will be paused. Default values for the alarm limits are set by the values in the column list when a column is selected in the method and ***Alarm pre column pressure*** is set as a variable. ***Low alarm*** is only triggered if the pressure first exceeds the ***Low alarm*** limit for ten seconds continuously then falls below the ***Low alarm*** limit. ***Note:*** *Setting the **Low alarm** to 0 deactivates the low pressure alarm.*

9.7.5 System settings - Air sensor

The table below describes the air sensor related system settings available for ÄKTA avant.

Instruction name	Description
Alarm air sensors	Enables or disables the air sensor alarm for the built-in air sensor at inlet A, inlet B or the sample inlet. If an air sensor alarm is enabled and air is detected, an alarm will be triggered and the method will be paused.
Alarm air sensor ext	Enables or disables the alarm for the optional air sensor. If the alarm is enabled and air is detected, an alarm will be triggered and the method will be paused.
Air sensor sensitivity	Sets the sensitivity of the built-in air sensors at inlet A, inlet B or the sample inlet. • ***Normal*** (30 µl) is used to detect when a buffer or sample vessel is empty. • ***High*** (10 µl) is used to detect small air bubbles
Air sensor sensitivity ext	Sets the sensitivity of the optional air sensor number. The optional air sensor can be located either before any of the inlets A or B or after the injection valve. ***Normal*** (30 µl) is used to detect when a buffer or sample vessel is empty. ***High*** (10 µl) is used to detect small air bubbles • When located before an inlet, the default sensitivity is ***Normal***. • When located after the injection valve, the default sensitivity is ***High*** and the pump currently pumping onto the column is used for calculating the air volume for the external air sensor. ***Note:*** *Using an air sensor after the injection valve is only useful when running at lower pressures. High pressure dissolves any small air bubbles present.*

9.7.6 System settings - I/O-box

The following table describes the I/O-box related system settings available for ÄKTA avant.

Instruction name	Description
Digital out X	Sets the value of the signal sent out by digital port number X to either 0 or 1. The default value is 1.
Noise reduction analog in X	Filters the noise in the analog signal in port number X.
Alarm analog in X	Enables or disables the alarm for the analog signal in port number X. When enabled, it sets the alarm limits for the analog signal. If the alarm is enabled and the analog signal falls outside the set limits, an alarm will be triggered and the method will be paused.
Alarm digital in X	Enables or disables the alarm for the signal in digital port number X. The alarm can be triggered by either of the signal values, 0 or 1. If the alarm is enabled and the condition set in ***Value*** occurs, an alarm will be triggered and the method will be paused.
Configure analog out X	Enables the user to send one of the pre-defined signals (UV signal, conductivity, temperature, pH or concentration of eluent B) to the analog out port number X, and also to set the range of that signal.

9.7.7 System settings - Fraction collection

The following tables describe the fraction collection related system settings available for ÄKTA avant.

Instruction name	Description
Fractionation settings	***Fractionation settings*** comprises fractionation mode and fractionation order. ***Fractionation mode*** (***Automatic***, ***Accumulator*** or ***DropSync***). ***Fractionation order*** (***Row-by-row***, ***Column-by-column***, ***Serpentine-row***, ***Serpentine-column***). For fractionation mode ***DropSync***, the ***Serpentine-row*** and ***Serpentine-column*** options are available.
Last tube filled	Action when last tube is filled (pause, direct the flow to one of outlets or direct the flow to waste.
Cassette configuration	***Cassette configuration***: ***Automatic*** or ***Manual*** configuration. If ***Automatic*** is selected, a Quick scan or a Full scan will be performed when the door of the fraction collector is closed to determine which type of cassettes and plates are used. If ***Manual*** is selected, used plates and tubes in each tray position are entered.
Fraction collector temperature	Sets the fraction collector chamber target temperature.
Fraction collector lamp	Lamps in the fraction collector chamber on or off.
Fractionation settings frac 2	***DropSync*** synchronises tube change to drop release. The available settings are on or off. It is recommended to use ***DropSync*** for flow rates below 2 ml/min. However, higher flow rates can be used depending on the properties (for example viscosity) of the liquid.
Fractionation numbering mode frac 2	Determines whether fraction number for the second fraction collector is reset at the end of a method or not. ***Note:*** *The default setting is* ***Reset***.

Instruction name	Description
Peak fractionation parameters	The ***Peak fractionation parameters*** set the detection parameters for peak collection, that is they decide when a peak starts and ends. This information is used by the instructions ***Fraction collection:Peak fractionation*** and ***Fraction collection:Peak frac in outlet valve*** in order to start/end the peak collection.

Delay volumes

The settings for system delay volumes are accessible as parameters to the ***Fraction collection:Delay volumes*** instruction.

Parameter for Delay volumes	Description
Detector- Frac	Is used to define the delay volume between the monitor and the built-in Fraction collector. The instruction is used to make sure that the collected fractions correspond to the fractions indicated in the chromatogram.
Detector - Outlet valve	Is used to define the delay volume between the monitor and the Outlet valve. The instruction is used to make sure that the collected fractions correspond to the fractions indicated in the chromatogram. The delay volume must be changed when changing tubing to another inner diameter or length, or when removing or adding components.
Restrictor volume	Is used to calculate the delay volume between the monitor and the Outlet valve. The instruction is used to make sure that the collected fractions correspond to the fractions indicated in the chromatogram. It is recommended not to alter the default values for restrictor and pH cell delay volumes when standard modules and standard tubing for flow restrictor are used.
pH cell volume	Is used to calculate the delay volume between the monitor and the Outlet valve. The instruction is used to make sure that the collected fractions correspond to the fractions indicated in the chromatogram. It is recommended not to alter the default values for restrictor and pH cell delay volumes when standard modules and standard tubing for flow restrictor are used.

Parameter for Delay volumes	Description
Detector - Frac 2	Is used to define the delay volume between the monitor and the second Fraction collector. The instruction is used to make sure that the collected fractions correspond to the fractions indicated in the chromatogram. The instruction is available only when the second Fraction collector is selected in the component list.

9.7.8 System settings - Watch parameters

The following table describes the watch parameter settings available for ÄKTA avant.

Instruction name	Description
Watch UV parameters	Sets the accepted signal fluctuation and ***Delta peak*** limit of the UV signal for some of the tests in the ***Watch:Watch*** and ***Watch:Hold until*** instructions.
Watch UV 2nd parameters	Sets the accepted signal fluctuation and ***Delta peak*** limit of the UV 2nd signal for some of the tests in the ***Watch:Watch*** and ***Watch:Hold until*** instructions.
Watch cond parameters	Sets the accepted fluctuation and ***Delta peak*** limit of the conductivity signal for some of the tests in the ***Watch:Watch*** and ***Watch:Hold until*** instructions.
Watch cond 2nd parameters	Sets the accepted fluctuation and ***Delta peak*** limit of the signal from the second conductivity monitor for some of the tests in the ***Watch:Watch*** and ***Watch:Hold until*** instructions.
Watch pH parameters	Sets the value for the accepted fluctuation of the pH signal used for the test ***Stable signal*** in the instructions ***Watch:Watch*** and ***Watch:Hold until***.
Watch flow parameters	Sets the value for the accepted fluctuation of the flow rate signal used for the test ***Stable signal*** in the instructions ***Watch:Watch*** and ***Watch:Hold until*** with signal ***System flow***.
Watch pressure parameters	Sets the value for the accepted fluctuation of the pressure signals used for the test ***Stable signal*** in the instructions ***Watch:Watch*** and ***Watch:Hold until***.
Watch analog in parameters	Sets the accepted signal fluctuation and ***Delta peak*** limit of the analog signal for some of the tests in the ***Watch:Watch*** and ***Watch:Hold until*** instructions.

9.7.9 System settings - Advanced

The following table describes the advanced system settings available for ÄKTA avant.

Instruction name	Description
Constant pressure flow parameters	Sets the values for the P and I factors needed to keep a constant pressure by varying the flow rate. The signal used for pressure control is set in the instruction ***Advanced:Constant pressure flow***.
Pressure control parameters	By using ***Pressure control*** the method can be run with the set flow rate without the risk of method stop due to pressure alarm. Pressure control is enabled in the instruction ***Pumps and Pressures:System flow*** or ***Pumps and PressuresSample flow***. ***Pressure control parameters*** provides the P and I factors used in the regulator and can be adjusted for different columns.
Max flow during valve turn	Sets the maximum flow rate used during the turning of the injection and outlet valve in order to avoid high pressure alarms.
Method progressing flow	Sets which flow (***Automatic***, ***System flow*** or ***Sample flow***) to use to calculate the progress of the method. In automatic mode, the position of the injection valve determines if the system flow or the sample flow is used.
Sample pump setting	Enables or disables sample pump flow while the injection valve is in manual load position.
Instrument display	Locks or unlocks the ***Pause*** and ***Continue*** buttons on the instrument display.

Wash settings

The settings for system wash are accessible as parameters to the ***Advanced:System and pump wash settings*** and ***Advanced:Loop wash settings*** instructions.

Parameter for System and pump wash settings	Description
System flow rate	Sets the flow rate used for the ***Pumps and pressures:System wash*** instruction. ***Note:*** • *The volume for system wash is set in the **Pumps and pressures:System wash** instruction.* • *The flow rate should not exceed 10 ml/min if narrow inlet tubing (i.d. 0.75 mm) is used.* • *Adjust the flow rate during the system wash so that the system pressure does not exceed 2 MPa.*
System pump wash volume	Sets the wash volume used during system pump washes.
Sample flow rate	Sets the flow rate used during sample pump washes. ***Note:*** *The flow rate should not exceed 10 ml/min if narrow inlet tubing (i.d. 0.75 mm) is used.*
Sample pump wash volume	Sets the wash volume used during sample pump washes.

Parameter for loop wash settings	Description
Loop wash flow rate	Sets the flow rate used during ***Loop wash***. ***Note:*** • *The volume for loop wash is set in the **Pumps and pressures:Loop wash** instruction.* • *The flow rate should not exceed 10 ml/min if narrow inlet tubing (i.d. 0.75 mm) is used.*
Loop wash high alarm	Sets the maximum pressure value during ***Loop wash***. If the system pressure exceeds this value an alarm is issued and the method is paused.

9.7.10 System settings - Data collection

The following table describes the data collection related system settings available for ÄKTA avant.

Instruction name	Description
Name of given curve. E.g., ***UV1***, ***UV2***, ***Cond***	The ***Maximum number of data points*** parameter determine the maximum number of data points collected for a given curve. Data reduction occurs if the maximum number of data points is exceeded. To avoid data reduction, set the maximum number of data points to be collected to 180000 or insert a ***New Chromatogram*** instruction in the method. ***Note:*** *The default setting is 54000 data points, which corresponds to 1.5 h for a signal of 10 Hz.*

9.8 Using Manual instructions

It is possible to manually interact with an ongoing method using ***Manual instructions***.

Step	Action
1	In the ***System Control*** module: • On the ***Manual*** menu. click ***Execute Manual Instructions*** *or* • use the shortcut **Ctrl +M**. *Result:* The ***Manual instructions*** dialog box opens.
2	In the ***Manual instructions*** dialog box: • Click the + symbol to show the instructions for the instruction group that you want to modify. • Select the instruction that you want to modify. • Enter the new values for the instruction.
3	To execute several instructions at the same breakpoint, select and edit an instruction and click ***Insert***. Repeat for several instructions.
4	To update parameter fields during method run, select the ***Auto update*** checkbox.
5	To perform the instructions, click ***Execute***.

All available manual instructions are described in the following subsections.

9.8.1 Manual instructions - Pumps and pressures

The following table describes the pump and related manual instructions available for ÄKTA avant.

Instruction name	Description
System flow	Defines the system flow rate. Flow rate can be set either as volumetric or as linear flow. A column type must be selected before using linear flow.
Sample flow	Defines the system flow rate. Flow rate can be set either as volumetric or as linear flow. A column type must be selected before using linear flow.
Gradient	Sets a gradient (linear or stepwise) using the system pumps A and B. ***Note:*** *Set gradient length value to 0 to perform a step gradient.*
Pump wash	Is used to change buffers in the inlet tubing, pump and mixer. ***Note:*** • *Pressing **End** during **Pump wash** will terminate both the wash and the run immediately.* *Pressing **Continue** during **Pump wash** will terminate the wash and the run will continue from the point at which the **Pump wash** instruction was executed.* • *An instruction issued when a **Pump wash** is in progress will not be executed until the wash is completely finished and all valves have turned back to the previous positions.* • ***Pump wash** cannot be executed when the system is in state **HOLD**.*

Instruction name	Description
Loop wash	Is used to wash the Loop valve. It is possible to wash a single sample application loop, all loops or only the by-pass position. ***Note:*** • *Pressing **End** during **Loop wash** will terminate both the wash and the run immediately.* *Pressing **Continue** during **Loop wash** will terminate the wash and the run will continue from the point at which the **Loop wash** instruction was executed.* • *An instruction issued when a **Loop wash** is in progress will not be executed until the wash is completely finished and the valves have turned back to the previous positions.* • ***Loop wash** cannot be executed when the system is in state **HOLD**.*
System wash	Is used to fill the system with the selected buffer composition. The flow can be directed to the waste position of either the injection valve or the outlet valve. The flow is directed to the end of the flow path if outlet valve is not present. ***Note:*** • *Pressing **End** during **System wash** will terminate both the wash and the run immediately.* *Pressing **Continue** during **System wash** will terminate the wash and the run will continue from the point at which the **System wash** instruction was executed.* • *If **System wash** is performed during a **Gradient** operation, the current component B concentration is maintained during the wash.* • *An instruction issued during a system wash operation cannot be executed until the wash is completely finished and all valves have turned back to the previous positions.* • ***System wash** cannot be executed when the system is in state **HOLD**.* • *Adjust the flow rate during the system wash so that the system pressure does not exceed 2 MPa.*

Instruction name	Description
System wash BufferPro	Is used to fill the system with the selected BufferPro buffer composition and stabilize the pH before the flow is directed to the column. The wash flow can be directed to either the waste position of the injection valve or the outlet valve.
Quaternary start concentrations	Is used to set the start concentration of the quaternary gradient. This instruction is often used together with the instruction ***Quaternary Gradient***. The sum of the start concentrations of Q1 to Q4 must be 100%.
Quaternary gradient	Defines the length and end concentration of the quaternary gradient. The start values are set by the instruction ***Quaternary start concentration***. The sum of the target concentrations Q1 to Q4 must be 100%.
BufferPro pH	Is used to set or change the pH when automatic buffer preparation is active during a method run.
Column packing flow	Is used to set higher isocratic flow rates. This can be useful in column packing. In ÄKTA avant 25 both pump A and pump B generates flows up to 50 ml/min. In ÄKTA avant 150 both pump A and B generate flows up to 300 ml/min.

9.8.2 Manual instructions - Flow path

The following table describes the flow path related manual instructions available for ÄKTA avant.

Instruction name	Description
Injection valve	Sets the Injection valve to the selected position. The instruction gives an injection mark in the chromatogram when the inlet valve switches to ***Inject*** or ***Direct Inject***. ***Note:*** ***Sample pump load*** *flow refers to the flow that enters the injection valve via* ***SaP*** *port*.
Column position	Turns the Column valve to the position specified in the parameter ***Position***.
Inlet A	Turns Inlet valve A to the selected position.
Inlet B	Turns the Inlet valve B to the selected position.
pH valve	Sets the pH cell and the 0.2 to MPa restrictor in positions inline or offline. The pH valve also has a calibration position. This position is only available when performing calibration of the pH monitor (In ***System control*** select ***System:Calibrate***).The calibration position can also be used to fill the pH cell with storage solution since the pH valve is in open position. ***Note:*** • *It is not possible to turn the pH valve during any type of fractionation as it affects the delay volume.* • *The* ***pH valve*** *instruction can be given during the delay volume of the different stop fractionation instructions, but it is executed only after the set delay volume has been collected.*
Sample inlet	Turns the Sample inlet valve to the selected position.
Outlet valve	Turns the Outlet valve to the selected position. The instruction gives a mark in the chromatogram when the valve is switched to the selected position.
Loop valve	Turns the Loop valve to the selected position.

Instruction name	Description
Versatile valve to ***Versatile valve 4***	Turns the numbered Versatile valve to the selected position. ***Note:*** *Four sets of positions are available. In positions **1-3** and **2-4** only a single flow channel can be used. In positions **1-4** & **2-3** and **1-2** & **3-4** the flow can be directed through two channels simultaneously.*
Valve X1	Turns the extra inlet valve to the selected position. The extra valve is a basic 8 port valve, without air sensor, to be used for general applications.
Valve X2	Turns the extra inlet valve to the selected position. The extra valve is a basic 8 port valve, without air sensor, to be used for general applications.
Injection mark	Sets an injection mark in the chromatogram at the point where this instruction is executed. ***Note:*** *The instruction is useful when the sample is loaded onto the column by the system pump.*

9.8.3 Manual instructions - Monitors

The table below describes the monitor related manual instructions available for ÄKTA avant.

Instruction name	Description
Auto zero UV	Sets the UV signals from U9-M to 0 mAU.
Auto zero UV 2nd	Sets the UV signal from U9-L, 2nd to 0 mAU.
Wavelength	Sets the wavelengths for UV monitor U9-M. The corresponding curves in the chromatogram are marked with the set wavelengths. ***Note:*** • *Do not use more wavelengths than necessary for the application.* • *At low wavelengths, the eluent can have absorbance of its own.*
Noise reduction UV	Filters the noise in the UV signal from UV monitor U9-M. A column-specific averaging time is set automatically when a column is defined in a method run and ***Averaging time*** is set as a variable.
Noise reduction UV 2nd	Filters the noise in the UV monitor signal from U9-L, 2nd. A column-specific averaging time is set automatically when a column is defined in a method run and ***Averaging time*** is set as a variable.
Relative scale cond	Facilitates monitoring using the conductivity monitor, of a gradient, for which the user sets the conductivity values for 0% and 100%. The ***Relative scale cond*** instruction can be set in ascending manner (0% for low and 100% for high conductivity) or in descending manner (0% for high and 100% for low conductivity). ***Note:*** *The **Relative scale cond** instruction in descending manner is especially useful for conductivity visualization in RPC and HIC, where the conductivity curve is reversed compared to the concentration curve (i.e., high conductivity at 0% B and low conductivity at 100% B).*

Instruction name	Description
Relative scale cond 2nd	Facilitates monitoring using a second conductivity monitor, of a gradient, for which the user sets the conductivity values for 0% and 100%. The ***Relative scale cond*** instruction can be set in ascending manner (0% for low and 100% for high conductivity) or in descending manner (0% for high and 100% for low conductivity). ***Note:*** *The **Relative scale cond** instruction in descending manner is especially useful for conductivity visualization in RPC and HIC, where the conductivity curve is reversed compared to the concentration curve (i.e., high conductivity at 0% B and low conductivity at 100% B).*

9.8.4 Manual instructions - Fraction collection

The following table describes the fraction collection related manual instructions available for ÄKTA avant.

Instruction name	Description
Fractionation	Is used when collecting fractions with a fraction collector.
Peak fractionation	Enables collection of only those peaks that fulfill the conditions set in the ***Peak fractionation parameters*** instruction.
Stop fractionation	Ends the fractionation after the set delay volume (specified in the ***System Settings:Fraction collection:Delay volumes*** instruction) has been collected. The outlet valve is then turned to position ***Waste***. ***Note:*** *If **Stop fractionation** is issued when both **Fractionation** and **Peak fractionation** are active, fractionation is stopped after the set delay volume has been collected. The outlet valve remains in position **Frac** and peak fractionation continues.*
Stop peak fractionation	Ends the peak fractionation after the set delay volume (specified in the ***System Settings:Fraction collection:Delay volumes*** instruction) has been collected. The outlet valve is then turned to position ***Waste***.
Last tube filled	***Last tube filled*** sets the action to perform after the built-in fraction collector fills the last tube of the run: pause the fractionation, direct the flow to one of the outlet ports of the outlet valve or direct the flow to waste.
Feed tube	***Feed tube*** moves the fractionation arm of the built-in fraction collector to the position specified by the parameter ***Start position***, after the set delay volume has been collected. A fraction mark is given in the chromatogram. Fraction collector F9-R: ***Feed tube*** moves the tube rack forward one tube after the set delay volume has been collected and a fraction mark is set. When fractionation or peak fractionation is not ongoing, ***Feed tube*** moves the rack instantly and no fraction mark is set.

Instruction name	Description
Accumulator wash	***Accumulator wash*** is used to wash the accumulator of built-in the fraction collector with the current solution present in the system. The wash flow rate is set in the instruction **Wash settings:Fraction collector wash settings** and the current inlet positions are used. After the wash, the flow rate and the valve positions automatically go back to their previous settings. ***Note:*** ***Fraction collector wash*** *cannot be executed during any type of fractionation.*
Fractionation numbering mode	Only for Fraction collector F9-R. ***Fractionation numbering mode*** determines whether the fraction number is reset at the end of a method or not. ***Note:*** *The default setting is* ***Reset****.*
Reset tube type	Only for Fraction collector F9. ***Reset tube type*** resets all the tube types in the fraction collector. ***Note:*** *It is not allowed to execute the* ***Reset tube type*** *instruction during fractionation.*
Frac cleaning position	Only for Fraction collector F9. ***Frac cleaning position*** enables manual cleaning of the dispenser head. The system is paused and the fractionation arm is moved to the middle front of the interior of the fraction collector. It is then possible to open the door of the fraction colelctor and manually clean the dispenser head. ***Note:*** *The* ***Frac cleaning position*** *instruction cannot be executed during fractionation.*
Fraction collector lamp	Only for Fraction collector F9. ***Fraction collector lamp*** turns the light in the fraction collector on or off.

Instruction name	Description
Cassette configuration	Only for Fraction collector F9. ***Cassette configuration*** is set to either ***automatic*** or ***manual***: • Automatic: the fraction collector automatically detects the cassette types present in the fraction collector. • Manual: The fraction collector content is manually set.
Fractionation frac 2	Is used when collecting fractions with the second Fraction collector.
Stop fractionation frac 2	Ends the fractionation after the set delay volume for the second Fraction collector (specified in ***System Settings:Tubing and Delay volumes***) has been collected. The outlet valve is then turned to position **Waste**. ***Note:*** *If **Stop fractionation frac 2** is issued when both **Fractionation frac 2** and **Peak fractionation frac 2** are active, fractionation is stopped after the set delay volume has been collected. The Outlet valve **V9-O** or **V9H-O** remains in position **Outlet 10 / Frac 2** and peak fractionation in the second Fraction collector continues.*
Peak fractionation frac 2	Enables collection of only those peaks that fulfill the conditions set in the ***Peak fractionation parameters*** instruction.
Stop peak fractionation frac 2	Ends the peak fractionation in second Fraction collector after the set delay volume (specified in ***System Settings:Tubing and Delay volumes***) has been collected. The outlet valve is then turned to position **Waste**.
Reset frac number frac 2	Sets fraction numbers to restart from 1 for the second Fraction collector. The restart occurs when the instruction is issued. The instruction overrides the continuous numbering mode if ***Fractionation numbering mode frac 2*** is set to ***Continue*** in ***System Settings***.

Instruction name	Description
Feed tube frac 2	During fractionation or peak fractionation the instruction ***Feed tube frac 2*** moves the second Fraction collector tube rack forward one tube after the set delay volume has been collected and a fraction mark is set. When fractionation or peak fractionation is not ongoing, ***Feed tube frac 2*** moves the rack instantly and no fraction mark is set.
Fractionation in outlet valve	Applicable if no fraction collector is used. ***Fractionation in outlet valve*** enables fractionation via the outlet valve. When the set fraction size/outlet has been collected, the outlet valve turns to the next position. A fraction mark is set in the chromatogram for each new outlet position.
Stop frac in outlet valve	Applicable if no fraction collector is used. ***Stop frac in outlet valve*** ends the fractionation in outlet valve after the set delay volume (specified in ***System Settings:Tubing and Delay volumes***) has been collected. The outlet valve is then turned to position **Waste**.
Peak frac in outlet valve	Applicable if no fraction collector is used. ***Peak frac in outlet valve*** enables collection of only those peaks that fulfill the conditions set in ***Peak fractionation parameters***. When the set fraction size/outlet has been collected, the outlet valve turns to the next position. A fraction mark is set in the chromatogram for each new outlet position.
Stop peak frac in outlet valve	Applicable if no fraction collector is used. ***Stop peak frac in outlet valve*** ends the peak fractionation in outlet valve after the set delay volume (specified in ***System Settings:Tubing and Delay volumes***) has been collected. The outlet valve is then turned to position **Waste**.
Peak fractionation parameters	Sets the detection parameters for peak collection, i.e. it determines when a peak starts and ends. This information is used by the instructions ***Peak fractionation***, ***Peak fractionation frac 2*** and ***Peak frac in outlet valve*** in order to start/end the peak collection.

9.8.5 Manual instructions - I/O-box

The following table describes the I/O-box related manual instructions available for ÄKTA avant.

Instruction name	Description
Auto zero analog in X	Sets the value of the analog signal in the analog port number X to 0 mV.
Reset auto zero analog in X	Sets the signal in analog port number X to its current value, i.e. the actual voltage in the analog port number X.
Noise reduction analog in X	Filters the noise in the analog signal in port number X.
Digital out X	Sets the value of the signal sent out by digital port number X to either 0 or 1. The default value is 1.
Pulse digital out X	Generates a pulsed signal in digital port number X. The signal changes from the initial state (0 or 1) to the opposite state and returns to the initial state after the defined length of time.
Configure analog out X	Enables the user to send one of the pre-defined signals (UV signal, conductivity, temperature, pH or concentration of eluent B) to the analog out port number X, and also to set the range of that signal.

9.8.6 Manual instructions - Alarms

The following table describes the alarm related manual instructions available for ÄKTA avant.

Instruction name	Description
Alarm system pressure	Sets the alarm limits for the system pressure. When enabled and the system pressure falls outside the set pressure limits, an alarm will be triggered and the method will be paused. Default values for the alarm limits are set by the values in the column list when a column is selected in the method and ***Alarm system pressure*** is set as a variable. ***Low alarm*** is only triggered if the pressure first exceeds the ***Low alarm*** limit for ten seconds continuously and then falls below the ***Low alarm*** limit. ***Note:*** *Setting the **Low alarm** or the system flow rate to 0 deactivates the low pressure alarm.*
Alarm sample pressure	Sets the alarm limits for the sample pressure. When enabled and the pressure falls outside the set pressure limits, an alarm will be triggered and the method will be paused. ***Low alarm*** is only triggered if the pressure first exceeds the ***Low alarm*** limit for ten seconds continuously then falls below the ***Low alarm*** limit. ***Note:*** *Setting the **Low alarm** to 0 deactivates the low pressure alarm.*

Instruction name	Description
Alarm delta column pressure	Sets the alarm limits for the delta column pressure (pre-column pressure minus post-column pressure). When enabled and the delta column pressure falls outside the set pressure limits, an alarm will be triggered and the method will be paused. ***Low alarm*** is only triggered if the pressure first exceeds the ***Low alarm*** limit for ten seconds continuously then falls below the ***Low alarm*** limit. ***Note:*** • *Setting the **Low alarm** to 0 deactivates the low pressure alarm.* • *Instruction **Alarm delta column pressure** is available only when Column valve **V9-C** or **V9H-C** (5-columns) is selected in the component list.*
Alarm pre column pressure	Sets the alarm limits for the pre column pressure. When enabled and the pre column pressure falls outside the set pressure limits, an alarm is issued and the method will be paused. Default values for the alarm limits are set by the values in the column list when a column is selected in the method and ***Alarm pre column pressure*** is set as a variable. ***Low alarm*** is only triggered if the pressure first exceeds the ***Low alarm*** limit for ten seconds continuously then falls below the ***Low alarm*** limit. ***Note:*** *Setting the **Low alarm** to 0 deactivates the low pressure alarm.*
Alarm UV	Enables or disables the alarm for the UV signal. When enabled, it sets the alarm limits for the UV signal from UV monitor U9-L. When the UV signal falls outside the set limits, an alarm will be triggered and the method will be paused.
Alarm UV1	Enables or disables the alarm for the UV 1 signal from UV monitor U9-M. When enabled, it sets the alarm limits for the UV 1 signal from UV monitor U9-M. When the UV signal falls outside the set limits, an alarm is issued and the method will be paused. ***Note:*** *It is not possible to set an alarm signal for the UV 2 or UV 3 signals from UV monitor U9-M.*

Instruction name	Description
Alarm UV 2nd	Enables or disables the alarm for the UV signal from UV monitor U9-L, 2nd. When enabled, it sets the alarm limits for the UV signal from U9-L, 2nd. When the UV signal falls outside the set limits, an alarm will be triggered and the method will be paused.
Alarm conductivity	Enables or disables the conductivity alarm. When enabled, it sets the alarm limits for the conductivity signal. When the conductivity falls outside the set limits, an alarm will be triggered and the method will be paused.
Alarm pH	Enables or disables the pH alarm. When enabled, it sets the alarm limits for the pH signal. When the pH falls outside the set limits, an alarm will be triggered and the method will be paused.
Alarm inlet A air sensor	Enables or disables the air sensor alarm for the built-in air sensor at inlet A. If the alarm is enabled and air is detected, an alarm will be triggered and the method will be paused.
Alarm inlet B air sensor	Enables or disables the air sensor alarm for the built-in air sensor at inlet B. If the alarm is enabled and air is detected, an alarm will be triggered and the method will be paused.
Alarm sample inlet air sensor	Enables or disables the air sensor alarm for the built-in air sensor at the sample inlet. If the alarm is enabled and air is detected, an alarm will be triggered and the method will be paused.
Alarm external air sensor X	Enables or disables the alarm for the optional air sensor number X. If the alarm is enabled and air is detected, an alarm will be triggered and the method will be paused.
Alarm analog in X	Enables or disables the alarm for the analog signal in port number X. When enabled, it sets the alarm limits for the analog signal. If the alarm is enabled and the analog signal falls outside the set limits, an alarm will be triggered and the method will be paused.

Instruction name	Description
Alarm digital in X	Enables or disables the alarm for the signal in digital port number X. The alarm can be triggered by either of the signal values, 0 or 1. If the alarm is enabled and the condition set in **Value** occurs, an alarm will be triggered and the method will be paused.

9.8.7 Manual instructions - Advanced

The following table describes the advanced manual instructions available for ÄKTA avant.

Instruction name	Description
Pressure control parameters	By using ***Pressure control*** the method can be run with the set flow rate without the risk of method stop due to pressure alarm. Pressure control is enabled in the instruction ***System flow*** or ***Sample flow***. ***Pressure control parameters*** provides the P and I factors used in the regulator and can be adjusted for different columns. Pressure control min flow rate can be set either as volumetric or as linear flow. A column type must be selected before using linear flow.
Constant pressure flow	Enables column packing at constant pressure. The system pump automatically adjusts the flow rate within the specified ***Minimum allowed flow rate*** – ***Maximum allowed flow rate*** range. The goal is to reach and keep the set ***Pressure*** at the selected ***Pressure sensor*** using the P and I factors set in the ***Constant pressure flow parameters*** instruction. The total volume is continuously updated using the actual flow rate. Both pressure control flow rates can be set either as volumetric or as linear flow. A column type must be selected before using linear flow. ***Note:*** • *When **Constant pressure flow** is used, the P and I factors set in the **Constant pressure flow parameters** instruction are used to control the pressure, instead of the P and I values set in the **Pressure control parameters** instruction.* • *Pressure sensor **Delta column pressure** is available only when column valve **V9-C** or **V9H-C** (5-columns) is selected in the component list.*
Constant pressure flow parameters	Sets the values for the P and I factors needed to keep a constant pressure by varying the flow rate. The signal used for pressure control is set in the instruction ***Constant pressure flow***.

Instruction name	Description
Column packing flow	Is used to set flow rates over 25 ml/min and 150 ml/min for ÄKTA avant 25 and ÄKTA avant 150, respectively. Both A and B pumps are used to generate the flow, making it possible to set flow rates up to 50 ml/min and 300 ml/min for ÄKTA avant 25 and ÄKTA avant 150, respectively. Flow rate can be set either as volumetric or as linear flow. A column type must be selected before using linear flow. Before executing the ***Column packing flow*** instruction it is important to: • Immerse inlet tubing **A1** and **B1** in the same buffer • Disconnect the column outlet tubing from the Column valve and place the tubing in a waste vessel ***Note:*** *When running **Column packing flow** only isocratic runs can be performed, gradients cannot be generated.*
Delay volume: Monitor to outlet valve	Is used to define the delay volume between the monitor and the Outlet valve. The instruction is used to make sure that the collected fractions correspond to the fractions indicated in the chromatogram. The delay volume must be changed when changing tubing to another i.d. or length or when removing or adding components.
Delay volume: Monitor to frac	Is used to define the delay volume between the monitor and the Fraction collector. The instruction is used to make sure that the collected fractions correspond to the fractions indicated in the chromatogram. The instruction is available only when the Fraction collector is selected in the component list.
Delay volume: Monitor to frac 2	Is used to define the delay volume between the monitor and the second Fraction collector. The instruction is used to make sure that the collected fractions correspond to the fractions indicated in the chromatogram. The instruction is available only when the second Fraction collector is selected in the component list.
Start volume count	Starts the volume counter function. The counted volume is saved into a memory. This instruction is best used in combination with ***Watch*** instructions.

Instruction name	Description
Stop volume count	Stops the volume counter function. The counted volume is stored in the memory and can be recalled with the instruction ***Hold counted volume***. The counted volume can also be recalled in following runs and is stored until a new ***Stop volume count*** instruction is issued. This instruction is best used in combination with ***Watch*** instructions.
Hold counted volume	Sets the system to ***Hold***. The system will remain in the state ***Hold*** until the accumulated volume reaches the volume stored by the instructions ***Start volume count*** / ***Stop volume count***.
Method progressing flow	Defines the flow from which the volume base is calculated. When set to ***Automatic***, the position of the injection valve determines if the system flow or the sample flow is used.

9.8.8 Manual instructions - Watch parameters

The following table describes the watch parameter instructions available for ÄKTA avant.

Instruction name	Description
Watch UV parameters	Sets the accepted signal fluctuation and ***Delta peak*** limit of the UV signal for some of the tests in the ***Watch*** and ***Hold until*** instructions.
Watch UV 2nd parameters	Sets the accepted signal fluctuation and ***Delta peak*** limit of the UV 2nd signal for some of the tests in the ***Watch*** and ***Hold until*** instructions.
Watch cond parameters	Sets the accepted fluctuation and ***Delta peak*** limit of the conductivity signal for some of the tests in the ***Watch*** and ***Hold until*** instructions.
Watch pH parameters	Sets the value for the accepted fluctuation of the pH signal used for the test ***Stable signal*** in the instructions ***Watch*** and ***Hold until***.
Watch flow parameters	Sets the value for the accepted fluctuation of the flow rate signal used for the test ***Stable signal*** in the instructions ***Watch*** and ***Hold until*** with signal ***System flow***.
Watch pressure parameters	Sets the value for the accepted fluctuation of the pressure signals used for the test ***Stable signal*** in the instructions ***Watch*** and ***Hold until***.
Watch analog in parameters	Sets the accepted signal fluctuation and ***Delta peak*** limit of the analog signal for some of the tests in the ***Watch*** and ***Hold until*** instructions.

9.8.9 Manual instructions - Other

The following table describes the other manual instructions available for ÄKTA avant.

Instruction name	Description
Set mark	Inserts a mark into the current chromatogram with the text entered for the parameter ***Mark text*** .
Timer	Sets the system to pause or end after a set volume or time has passed. ***Select base*** sets the base to either accumulated time or accumulated volume. ***Timeout*** sets the volume or time. ***Action*** sets the action to perform (pause or end)

9.9 Available Run data

Run data

The following table lists all available ***Run data*** for ÄKTA avant.

Run Data	Range/Unit	Description
System state	N/A	Status of connection and run.
Acc. Volume	ml	Total accumulated volume in the current method or manual run.
Block volume	ml	Accumulated volume in the current block (method run only).
Acc. Time	min	Total accumulated time in the current method or manual run.
Block time	min	Accumulated time in the current block (method run only).
Scouting no	N/A	The current scouting number in the scouting scheme.
System flow	0.001 to 50.000 ml/min (ÄKTA avant 25) 0.01 to 300.00 ml/min (ÄKTA avant 150)	The set flow rate of the system pumps.
System flow linear	cm/h	The set flow velocity of the system pumps. Only available if a column is selected.
System pressure	-1.00 to 20.00 MPa (ÄKTA avant 25) -1.00 to 5.00 MPa (ÄKTA avant 150)	The system pressure signal (at the system pumps).
Conc B	0.0 to 100.0%B	The set concentration B or the current value during a gradient.
Sample flow	0.001 to 50.000 ml/min (ÄKTA avant 25) 0.01 to 300.00 ml/min (ÄKTA avant 150)	The set flow rate of the sample pump.

Run Data	Range/Unit	Description
Sample flow linear	cm/h	The set flow velocity of the sample pump. Only available if a column is selected.
Sample pressure	-1.00 to 10.00 MPa (ÄKTA avant 25) -1.00 to 5.00 MPa (ÄKTA avant 150)	The sample pressure signal (at the sample pump).
PreC pressure	-1.00 to 20.00 MPa (ÄKTA avant 25) -1.00 to 5.00 MPa (ÄKTA avant 150)	The pre-column pressure signal.
DeltaC pressure	-1.00 to 20.00 MPa (ÄKTA avant 25) -1.00 to 5.00 MPa (ÄKTA avant 150)	The delta-column pressure signal.
PostC pressure	-1.00 to 20.00 MPa (ÄKTA avant 25) -1.00 to 5.00 MPa (ÄKTA avant 150)	The post-column pressure signal.
UV 1	-6000.000 to 6000.000 mAU	The first UV/Vis absorbance signal of the U9-M monitor.
UV 2	-6000.000 to 6000.000 mAU	The 2nd UV/Vis absorbance signal of the U9-M monitor.
UV 3	-6000.000 to 6000.000 mAU	The 3rd UV/Vis absorbance signal of the U9-M monitor.
UV 2nd	-6000.000 to 6000.000 mAU	The UV absorbance signal of the U9-L monitor.
pH	0.00 to 14.00 pH	The pH signal.
BufferPro pH	0.00 to 14.00 pH	Target BufferPro pH.
Conc Q1	0.0% to 100.0%	The set concentration of Q1 or the current value during a quaternary or BufferPro gradient
Conc Q2	0.0% to 100.0%	The set concentration of Q2 or the current value during a quaternary or BufferPro gradient

Run Data	Range/Unit	Description
Conc Q3	0.0% to 100.0%	The set concentration of Q3 or the current value during a quaternary or BufferPro gradient
Conc Q4	0.0% to 100.0%	The set concentration of Q4 or the current value during a quaternary or BufferPro gradient
Cond	0.00 to 999.99 mS/cm	The conductivity signal.
% Cond	0.0% to 100.0%	The conductivity signal as a percentage of a set range.
Cond temp	0.0°C to 99.0°C	The temperature signal (in the conductivity flow cell).
Inject	N/A	The set position of the Injection valve.
Loop position	N/A	The set position of the Loop valve.
Column position	N/A	The set position of the Column valve.
Flow direction	N/A	The set flow direction position of the Column valve **V9-C** and Column valve **V9H-C**.
Outlet	N/A	The set position of the outlet valve.
Inlet A	A1 - A7	The set position of the inlet valve A.
Inlet B	B1 - B7	The set position of the inlet valve B.
Sample inlet	S1 - S7, buff	The set position of the sample inlet valve.
pH valve	N/A	The set position of the pH valve.
Versatile valve	N/A	The set position of the versatile valve.
Versatile valve 2	N/A	The set position of the versatile valve 2.
Versatile valve 3	N/A	The set position of the versatile valve 3.
Versatile valve 4	N/A	The set position of the versatile valve 4.
Valve X1	N/A	The set position of the X1 valve.

Run Data	Range/Unit	Description
Valve X2	N/A	The set position of the X2 valve.
Air inlet A	No air, Air	The current state of the air alarm for the integrated air sensor in inlet valve A.
Air inlet B	No air, Air	The current state of the air alarm for the integrated air sensor in inlet valve B.
Air sample inlet	No air, Air	The current state of the air alarm for the integrated air sensor in inlet valve IS.
Air external	No air, Air	The current state of the air alarm for the external air sensors.
Frac position	N/A	The current tube position of the fraction collector.
Frac temp	N/A	
Frac 2 position	N/A	The current tube position of the fraction collector 2.
Analog in 1 to ***Analog in 4***	-2000.0 to 2000.0 mV	The I/O-box analog input signals.
Digital in 1 to ***Digital in 8***	0, 1	The I/O-box digital input signals.
Digital out 1 to ***Digital out 8***	0, 1	The set value of the I/O-box digital output signals.

9.10 Available Curves

Curves

The table lists data available in curves for ÄKTA avant.

Curve	Range	Sampling frequency	Description
UV 1_280	-6000.000 to 6000.000 mAU	10 Hz	The first UV/Vis absorbance signal of the U9-M monitor.
UV 2_0	-6000.000 to 6000.000 mAU	2 Hz	The 2nd UV/Vis absorbance signal of the U9-M monitor.
UV 3_0	-6000.000 to 6000.000 mAU	2 Hz	The 3rd UV/Vis absorbance signal of the U9-M monitor.
Cond	0.00 to 999.99 mS/cm	5 Hz	The conductivity signal.
% Cond	0.0% to 100.0%	1 Hz	The conductivity signal as a percentage of a set range.
Conc B	0.0% to 100.0%	1 Hz	The set concentration B or the current value during a gradient.
pH	0.00	1 Hz	The pH signal.
System flow	0.001 to 50.000 ml/min (ÄKTA avant 25) 0.01 to 300.00 ml/min (ÄKTA avant 150)	1 Hz	The set flow rate of the system pumps.
System flow linear	cm/h	1 Hz	The set flow velocity of the system pumps. Only available if a column is selected.
System pressure	-1.00 to 20.00 MPa (ÄKTA avant 25) -1.00 to 5.00 MPa (ÄKTA avant 150)	10 Hz	The system pressure signal (at the system pumps).
Cond temp	0.0°C to 99.0°C	0.5 Hz	The temperature signal (in the conductivity flow cell).

Curve	Range	Sampling frequency	Description
Sample flow	0.001 to 50.000 ml/min (ÄKTA avant 25) 0.01 to 300.00 ml/min (ÄKTA avant 150)	1 Hz	The set flow rate of the sample pump.
Sample flow linear	cm/h	1 Hz	The set flow velocity of the sample pump. Only available if a column is selected.
UV 2nd	-6000.000 to 6000.000 mAU	10 Hz	The UV absorbance signal of the U9-L monitor.
Sample pressure	-1.00 to 10.00 MPa (ÄKTA avant 25) -1.00 to 5.00 MPa (ÄKTA avant 150)	10 Hz	The sample pressure signal (at the sample pump).
PreC pressure	-1.00 to 20.00 MPa (ÄKTA avant 25) -1.00 to 5.00 MPa (ÄKTA avant 150)	1 Hz	The pre-column pressure signal.
DeltaC pressure	-1.00 to 20.00 MPa (ÄKTA avant 25) -1.00 to 5.00 MPa (ÄKTA avant 150)	1 Hz	The delta-column pressure signal.
PostC pressure	-1.00 to 20.00 MPa (ÄKTA avant 25) -1.00 to 5.00 MPa (ÄKTA avant 150)	1 Hz	The post-column pressure signal.
Conc Q1	0.0% to 100.0%	0.5 Hz	The set concentration of Q1 or the current value during a quaternary or BufferPro gradient
Conc Q2	0.0% to 100.0%	0.5 Hz	The set concentration of Q2 or the current value during a quaternary or BufferPro gradient

Curve	Range	Sampling frequency	Description
Conc Q3	0.0% to 100.0%	0.5 Hz	The set concentration of Q3 or the current value during a quaternary or BufferPro gradient
Conc Q4	0.0% to 100.0%	0.5 Hz	The set concentration of Q4 or the current value during a quaternary or BufferPro gradient
Frac temp	0°C to 99.0°C	0.5 Hz	The temperature inside the built-in fraction collector chamber.
Analog in 1 to ***Analog in 4***	-2000.0 to 2000.0 mV	10 Hz	The I/O-box analog input signals.
UV cell path length	0.2,0.5, 1.0 cm	1 Hz	The nominal cell path length of the U9-M monitor.
UV cell path length 2nd	0.2, 0.5 cm	1 Hz	The nominal cell path length of the U9-L monitor.
Digital in 1 to ***Digital in 8***	0, 1	10 Hz	The I/O-box digital input signals.
Digital out 1 to ***Digital out 8***	0, 1	10 Hz	The I/O-box digital output signals.

9.11 Injection volumes and peak broadening

Introduction

The width of peaks at the fraction collector is influenced by the following:

- the properties of the column,
- the dimensions of the tubing,
- the dimensions of the modules in the flow path, and
- fluid dynamics.

Sample volume effects

Initial sample volume affects the peak width in gel filtration (GF) chromatography and other isocratic techniques. A sample zone is broadened during passage through a GF column so that the sample is diluted and the resolution decreases with increasing sample volume. Sample volume does not however affect the resolution in adsorption chromatography techniques such as affinity chromatography (AC), ion exchange chromatography (IEX), and hydrophobic interaction chromatography (HIC) if the retention factor k is high.

Broadening from UV monitor to fraction collection

The effect of peak broadening in the system from sample injection to peak detection (including dilution on the column) is apparent in the chromatogram from the UV monitor, but broadening from the UV monitor to fraction collection is not visible in the chromatogram. This "hidden" effect is more pronounced for smaller peak volumes.

9.12 Delay volumes

Introduction

A number of methods, both theoretical and experimental, exist for determining the delay volume of a system. The easiest and recommended method is to perform a theoretical determination. Delay volumes for standard configurations are listed in *Standard delay volumes in ÄKTA avant 25 and ÄKTA avant 150, on page 502*.

Explanation of delay volume

The delay volume is the volume between the detector and the fraction collector or outlet that is used.

The following illustration shows and example of the delay volume between the UV/Vis monitor and the fraction collector.

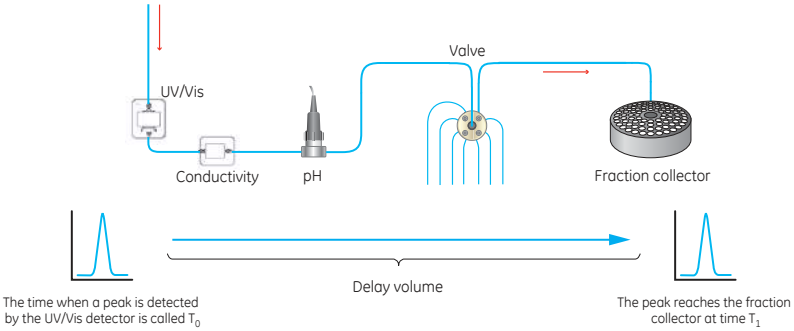

Theoretical determination of delay volumes

A theoretical determination is performed as described in the following steps:

Step	Action
1	Identify all components in the system flow path that contribute to the delay volume of interest.
2	Determine the internal volumes of all hardware modules and tubing, see *Section 9.13 Component volumes, on page 504* for information about theoretical module volumes and *Section 9.3 Tubing and connectors, on page 429* for information about tubing lengths and dimensions.

Step	Action
3	To obtain the total delay volume, sum up half of the flow cell volume of the monitor used (that is, the UV or UV/Vis monitor) with all volumes of tubing and modules that are located after the monitor in the flow path.

Note: *For pH-valve **V9-pH** and **V9H-pH** always use the volume for the valve in by-pass position. The system automatically adds the volumes for the flow restrictor and the pH flow cell when if they are part of the system.*

Set the delay volume in UNICORN

Follow the instructions to set the delay volume between the UV monitor and the Outlet valve and between the UV monitor and the Fraction collector.

Step	Action
1	In the ***System Control*** module, on the ***System*** menu, click ***Settings***. *Result:* The ***System Settings*** dialog box opens.
2	• Click ***Fraction collection:Delay volumes*** • Enter the delay volume between the UV monitor and the Fraction collector in the ***Detector-Frac*** field • Enter the delay volume between the UV monitor and the Outlet valve in the ***Detector - Outlet valve*** field • and click ***OK***.

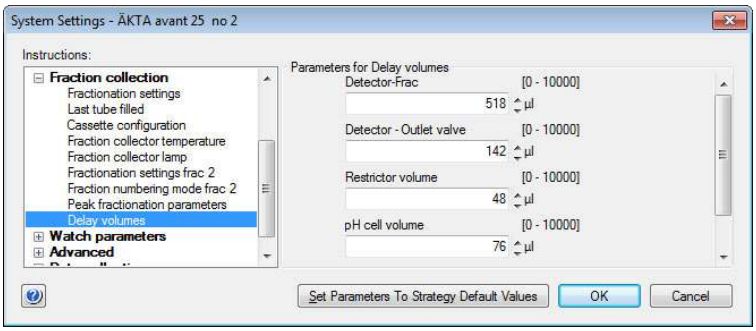

Note: *The system will use the delay volume appropriate to the configuration used and ignore other settings (e.g. the value for **Detector-Outlet valve** will be ignored if you are using a fraction collector). It is however recommended to set all delay volumes so that the volumes remain correct if you change fractionation method.*

Standard delay volumes in ÄKTA avant 25 and ÄKTA avant 150

The table below shows the delay volumes of different sections of the flow path.

Flow path	Volume (µl)
UV detector to built-in fraction collector ***Note:*** *With pH electrode and flow restrictor off-line.*	ÄKTA avant 25: 518 ÄKTA avant 150: 1807
UV detector to Outlet Valve ***Note:*** *With pH electrode and flow restrictor off-line.*	ÄKTA avant 25: 142 ÄKTA avant 150: 535
UV detector to second Outlet Valve	ÄKTA avant 25: 196 ÄKTA avant 150: 781
UV detector to third Outlet Valve	ÄKTA avant 25: 250 ÄKTA avant 150: 1028
Flow restrictor, including tubing **1R** and **2R**	ÄKTA avant 25: 48 ÄKTA avant 150: 94
pH flow cell	ÄKTA avant 25: 76 ÄKTA avant 150: 129
UV detector to ***Fraction collector F9-R, 2nd*** (With pH electrode and flow restrictor off-line.)	ÄKTA avant 25: 240 ÄKTA avant 150: 928

Delay volumes for extended systems

If modules and tubing are added to, or subtracted from, the ÄKTA avant system between the UV monitor and the fraction collector, use the standard delay volumes values in *Standard delay volumes in ÄKTA avant 25 and ÄKTA avant 150, on page 502* and correct with tubing volumes from *Section 9.3 Tubing and connectors, on page 429* and component volumes from *Section 9.13 Component volumes, on page 504* to calculate a new delay volume. Add this delay volume in UNICORN.

Note: *For pH-valve **V9-pH** and **V9H-pH** always use the volume for the valve in by-pass position. The system automatically adds the volumes for the flow restrictor and the pH flow cell when if they are part of the system.*

Use of different monitors for peak fractionation in the same method

If different monitors or detectors are used for peak fractionation in different parts of the same method, the delay volumes have to be set as method instructions for each of the method parts. For example, both an external fluorescence detector and the UV monitor module can be used for peak fractionation.

9.13 Component volumes

Introduction

This section describes the component volumes and delay volumes of the ÄKTA avant instrument.

The table below shows the component volumes of ÄKTA avant.

Component	Volume (µl)
Inlet valve **V9-IA**, **V9-IB**, **V9-A2**, **V9-B2**	88
Inlet valve **V9H-IA**, **V9H-IB**, **V9H-A2**, **V9H-B2**	212
Sample inlet valve **V9-IS**, **V9-S2**	88
Sample inlet valve **V9H-IS**, **V9H-S2**	212
Inlet valve **V9-IX**	88
Inlet valve **V9H-IX**	212
External air sensor **L9-1.2**	20
External air sensor **L9-1.5**	35
Pump P9 (**P9 A**, and **P9 B**) (total volume for two heads including T-connector and check valves)	549
Pump P9H (**P9H A**, **P9H B**, **P9H S**) (total volume for two heads including T-connector and check valves)	2163
System pump flow restrictor	30
Sample pump flow restrictor	30
System pump pressure monitor **R9**	45
Sample pump pressure monitor **R9**	45
Sample pump P9-S (**P9-S**) (total volume for two heads including T-connector and check valves)	1392
Mixer, 0.6 to ml	600
Mixer, 1.4 to ml	1400

Component	Volume (µl)
Mixer, 5 ml	5000
Mixer, 15 ml	15000
Loop valve **V9-L**	17
Loop valve **V9H-L**	76
Versatile valve **V9-V**	14
Versatile valve **V9H-V**	31
Injection valve **V9-Inj**	10
Injection valve **V9H-Inj**	23
Column valve **V9-C**,**V9-C2**	110
Column valve **V9H-C**, **V9H-C2**	190
UV monitor **U9-M**: Flow cell 0.5 mm	10
UV monitor **U9-M**: Flow cell 2 mm	11
UV monitor **U9-M**: Flow cell 10 mm	12
Second UV monitor **U9-L**: Flow cell 2 mm	30
Second UV monitor **U9-L**: Flow cell 5 mm	20
Conductivity cell	22
Flow restrictor **FR-902**	10
pH valve **V9-pH**, in ***By-pass*** position	15
pH valve **V9H-pH**, in ***By-pass*** position	35
pH flow cell mounted in pH valve **V9-pH**	76
pH flow cell mounted in pH valve **V9H-pH**	129
Flow restrictor **FR-902** and tubing when mounted on pH valve **V9-pH**	48
Flow restrictor **FR-902** and tubing when mounted on pH valve **V9H-pH**	94
Outlet valve **V9-O**, **V9-O2**, **V9-O3**	9
Outlet valve **V9H-O**, **V9H-O2**, **V9H-O3**	82

Component	Volume (µl)
Built-in fraction collector internal tubing	ÄKTA avant 25: 31 ÄKTA avant 150: 135
Built-in fraction collector accumulator	40
Built-in fraction collector dispenser head	ÄKTA avant 25: 53 ÄKTA avant 150: 68
Fraction collector **F9-R** tubing	ÄKTA avant 25: 98 ÄKTA avant 150: 393

Note: *The given values for the component volumes of the valves are average values. Depending on the chosen flow path the actual component volume may differ.*

9.14 Pressure control

Introduction

By using the function ***Pressure control*** to regulate the run, the method can be run with the set flow rate without the risk of method stop due to pressure alarm. If the pressure approaches the pressure limit, for example if the sample has higher viscosity than the buffer, the flow rate is automatically lowered. Pressure control is enabled in the manual instructions ***Pumps:System flow*** or ***Pumps:Sample flow***. The default setting for Pressure Control is ***Off***. To enable the function, set what pressure signal to use. It is recommended to use the pre-column pressure. The instruction ***Advanced:Pressure control parameters*** provides the P and I factors used in the regulator and can be adjusted for different columns, see information further down.

In the Method editor, pressure control is enabled by selecting ***Control the flow to avoid overpressure*** in the predefined phase ***Method settings***.

Pressure control parameters

The table below describes the factors used for pressure regulation.

Parameter	Description
P factor	Proportional component in PI pressure regulation. Reduces the error between actual and requested target pressure, but may leave a permanent error.
I factor	Integrating component in PI pressure regulation. Eliminates the stationary error from the P factor, but introduces a slight instability that may lead to oscillation in the pressure and the actual flow rate. Set I = 0 to disable the I factor. As a general guide use a small I factor for high pressure columns and a large I factor for low pressure columns, see *Recommended pressure control parameters, on page 508* for more recommendations.
Target value for pressure control	Sets the target value for the PI pressure regulation as a percentage of the pressure limit. If the target pressure is too close to the pressure limit there is a risk that a short pressure spike will trigger the pressure alarm. The pressure limit is set in the ***Alarm pressure*** instruction. The ***Alarm pressure*** used for pressure control depends on the settings in the ***System flow*** instruction.

Parameter	Description
Pressure control min flow rate	If the flow rate is reduced below the value set in ***Pressure control min flow rate***, the method is paused and the system is set to state ***ALARMS AND ERRORS***. ***Pressure control min flow rate*** can be set either as volumetric or as linear flow. A column type must be selected before using linear flow.

Recommended pressure control parameters

The following table contains the recommended values for P and I parameters for different media types.

Column/Media	Recommended P factor	Recommended I factor	Additional information
Default	8	40	N/A
Small soft media columns	8	40	N/A
Large soft[1] media columns	8	300 - 600	A higher I value than the default value is needed to speed up pressure ramp-up times.
Small rigid[2] media columns	8	15	A lower I value than the default value is needed to avoid large fluctuations in pressure or flow rate. As an alternative, try increasing P.
	20	40	

1 Soft media is defined as all GE separation media, except silica and MonoBeads.

2 Rigid media is defined as GE separation media that is based on silica and MonoBeads.

Back pressure

Using narrow tubing between components will improve resolution but will lead to increased back pressure in the system. Narrow tubing after the column will increase the pressure in the column at a given flow rate. Make sure that the pressure sensor limits in the system are set so that the maximum pressure for the column used is not exceeded.

Additional instructions for avoiding pressure alarms

The instruction ***Max flow during valve turn*** sets the maximum flow rate used during the turning of the Injection valve and Outlet valve in order to avoid high pressure alarms. If the flow rate passing through the Injection valve or the Outlet valve is higher than the set max flow rate, the valves will only turn after decreasing the flow to the specified flow rate. After the valves have turned, the previous flow rate will be restored. The instruction is found under ***Advanced*** in the ***System settings*** dialog box.

Constant pressure flow

By using the text instruction ***Constant pressure flow*** it is possible to continuously adjust the flow rate to keep a certain pressure. This could be useful for example in column packing at constant pressure. The ***Advanced: Constant pressure flow*** instruction is found in the ***Manual Instructions*** dialog box in the ***System Control*** module. See *Section 9.8.7 Manual instructions - Advanced, on page 487* for a description of parameters for the ***Constant pressure flow*** text instruction.

9.15 Check and change the Node ID of a module

Introduction

Node ID is a unit number designation that is used by the instrument to distinguish between several units of the same type. All standard valves and available optional modules are pre-configured to the default function. However, the function of a valve or module can be changed by changing the Node ID. Also, in a troubleshooting situation it may be useful to check a valve's or module's Node ID.

Note: *The function of a valve or module is defined by its Node ID, not by its physical position.*

Node ID for standard modules

The following table lists the Node ID for the standard modules.

Module	Label	Node ID
System Pump A	**P9 A** or **P9H A**	0
System Pump B	**P9 B** or **P9H B**	1
Sample Pump	**P9-S** or **P9H S**	2
Pressure Monitor, system pressure	**R9**	0
Pressure Monitor, sample pressure	**R9**	1
Mixer	**M9**	0
Injection Valve	**V9-Inj** or **V9H-Inj**	4
Quaternary Valve	**Q9**	0
Inlet Valve A	**V9-IA** or **V9H-IA**	0
Inlet Valve B	**V9-IB** or **V9H-IB**	1
Sample Inlet Valve	**V9-IS** or **V9H-IS**	2
Column Valve	**V9-C** or **V9H-C**	5
Precolumn pressure monitor in Column Valve	N/A	2
Post-column pressure monitor in Column Valve	N/A	3

Module	Label	Node ID
pH Valve	**V9-pH** or **V9H-pH**	11
pH Monitor ***Note:*** *The pH monitor is included in the pH valve module box.*	**H9**	0
Outlet Valve	**V9-O** or **V9H-O**	8
UV Monitor	**U9-M**	0
UV detector	**U9-D**	0
Conductivity Monitor	**C9**	0
Built-in fraction collector	N/A	Not settable by the user.

Node ID for optional modules

The following table lists the Node ID for the optional modules.

Module	Label	Node ID
Second Inlet valve A	**V9-A2** or **V9H-A2**	12
Second Inlet valve B	**V9-B2** or **V9H-B2**	13
Extra Inlet valve X1	**V9-IX** or **V9H-IX**	15
Extra Inlet valve X2	**V9-IX** or **V9H-IX**	16
Second Sample inlet valve	**V9-S2** or **V9H-S2**	14
Versatile valve	**V9-V** or **V9H-V**	20
Versatile valve 2	**V9-V** or **V9H-V**	21
Versatile valve 3	**V9-V** or **V9H-V**	23
Versatile valve 4	**V9-V** or **V9H-V**	24
Loop valve	**V9-L** or **V9H-L**	17
Second Column valve	**V9-C2** or **V9H-C2**	6
Unused pre-column pressure monitor in second Column valve	N/A	4

Module	Label	Node ID
Unused post-column pressure monitor in second Column valve	N/A	5
Second Outlet valve	**V9-O2** or **V9H-O2**	9
Third Outlet valve	**V9-O3** or **V9H-O3**	10
External air sensor	**L9-1.2** or **L9-1.5**	0
I/O-box	**E9**	0
Second I/O-box	**E9**	1
Second UV Monitor	**U9-L**	1
Second Conductivity Monitor	**C9**	0
Fraction collector 2	**F9-R**	1

Check and change the Node ID

The Node ID of a module is set by the positions of an arrow of two rotating switches at the back of the module. Follow the instructions to check or change the Node ID.

Step	Action
1	If applicable, remove the module according to the instruction in *Install a module in the instrument, on page 101*.
2	The Node ID is set by the positions of an arrow of two rotating switches at the back of the module. • The first rotating switch, labeled **A** sets the tens. • The second switch, labeled **B** sets the units. • For example for Node ID **13**, the **A** switch is set to **1** and the **B** switch to **3**. 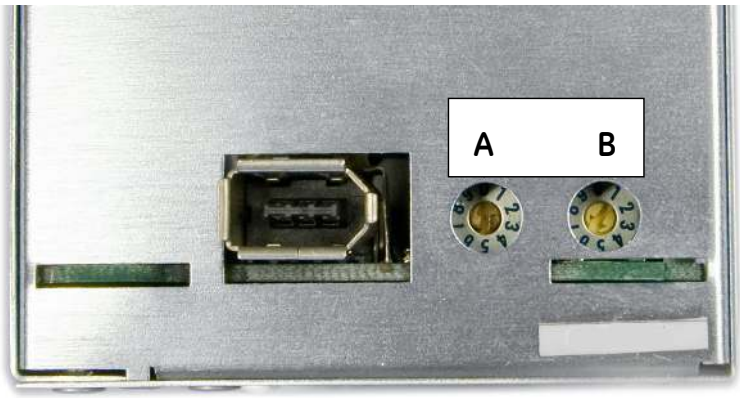
3	Check the Node ID and compare it with the listed Node IDs in the tables above.
4	To change the Node ID, use a screwdriver to set the arrows of the switches to the desired number.
5	Re-install the module in the instrument, if applicable.

10 Ordering information

Introduction

This chapter lists accessories and user replaceable spare parts available for ÄKTA avant.

Tubing

Item	Code no.
Reference capillary 1	28-9507-49
Reference capillary 2	28-9507-50
ETFE Tubing kit 10×1.0 m, id 1.0 mm, od 1/16″ ***Note:*** *Outlet tubing for ÄKTA avant 25.*	28-9809-95
Tubing kit 10×1.5m, FEP i.d.1.6 mm, o.d. 1/8″ ***Note:*** *Inlet tubing for ÄKTA avant 25/* *Outlet tubing for ÄKTA avant 150*	28-9809-84
Tubing kit 10×1.5m, FEP id 2.9 mm, o.d 3/17″ ***Note:*** *Inlet tubing for ÄKTA avant 150.*	28-9809-87
Sample tubing kit for 7 inlets i.d. 0.75 mm ***Note:*** *Narrow inlet tubing for ÄKTA avant 25.*	28-9572-17
Rinse system tubing	28-9565-04
Replacement tubing kit, ÄKTA avant 25	28-9566-06
Replacement Tubing Kit, ÄKTA avant 150	28-9794-46
BufferPro InA and InB tubing kit, FEP i.d. 1.6 mm o.d. 1/8″	28-9809-98

Item	Code no.
Complete tubing marking kit ***Note:*** *Tags for all tubing in ÄKTA avant 25 and ÄKTA avant 150.*	28-9566-08
Inlet/outlet tubing tag kit, ÄKTA avant 25 ***Note:*** *Tags for all inlet and outlet tubing in ÄKTA avant 25.*	28-9810-01
Inlet/outlet tubing tag kit, ÄKTA avant 150 ***Note:*** *Tags for all inlet and outlet tubing in ÄKTA avant 150.*	28-9810-04
Union 1/16″ male/male, i.d. 0.5 mm (5-pack)	28-9543-26
Tubing cutter	18-1112-46
Inlet filter holder kit	11-0004-07
Inlet filter set	11-0004-14

Fittings and connectors

Item	Code no.
Fingertight connector, 1/16″ male	18-1112-55
Tubing connector for o.d. 1/16″ tubing	18-1127-07
Tubing connector for o.d. 1/8″ tubing	18-1121-17
Tubing connector for o.d. 3/16″ tubing	18-1112-49
Union, 1/16" female to 1/16" female, (5 pcs)	11-0003-39
Union, Fingertight 1/16" female to 1/16" female, i.d. 0.3 mm (4 pcs)	11-0008-52
Union, 1/16" male to M6 female	18-1112-58
Union, 1/16" female to M6 male	18-1112-57
Union, Luer female to 1/16" male	18-1112-51
Union, 1/16" male to 1/16" male, i.d. 0.5 mm (2 pcs)	18-1120-93

Item	Code no.
Union, 5/16" female to M6 male	18-1127-76
Union, 5/16" female to 1/16" male	18-1142-08
Union, M6 female to 1/16" male	18-3858-01
Ferrule for 1/16" tubing connector, blue	18-1127-06
Ferrule for 1/8" tubing connector, yellow	18-1121-18
Ferrule for 3/16" tubing connector, blue	18-1112-48
Stop plug, 5/16" male	18-1112-50
Stop plug, 1/16" male	18-1112-52

Holders

Item	Code no.
Adapter for air sensor	28-9563-42
Bottle holder	28-9563-27
Column clamp (for columns o.d. 10 to 21 mm)	28-9563-19
Column holder	28-9562-82
Column holder rod	28-9562-70
Flexible column holder	28-9562-95
Loop holder	29-0113-50
Multi-purpose holder	29-0113-49
Rail extension	29-0113-52
Tube holder (5-pack)	28-9543-29
Tubing holder comb	28-9562-86
Tubing holder, spool for small tubing (o.d. 1/8" and smaller)	28-9562-74
Tubing holder, spool for large inlet tubing (o.d. 3/16") for ÄKTA avant 150	29-0142-83
Inlet filter holder kit	11-0004-07

Item	Code no.
Screw lid kit, GL45	11-0004-10

Conversion kits

Item	Code no.
ÄKTA avant Conversion kit, 25 to 150 ***Note:*** *Contact Service for installation.*	28-9801-68
ÄKTA avant Conversion kit, 150 to 25 ***Note:*** *Contact Service for installation.*	28-9818-61

Pump spare parts

Item	Code no.
P9-S Seal kit, 65 ml	28-9602-50
P9 Seal kit, 25 ml (seal kit, P9)	28-9526-42
Piston kit, 100 ml (piston kit, P9-S)	18-1112-13
P9 Piston, kit 25 ml	28-9526-40
Check valve kit (check valves in/out for P9, P9H and P9-S)	18-1128-66
P9H Piston kit, 150 ml	28-9793-68
P9H Seal kit, 150 ml	28-9793-73

Mixer

Item	Code no.
Mixer chamber 0.6 ml	28-9561-86
Mixer chamber 1.4 ml (mounted at delivery in ÄKTA avant 25)	28-9562-25

Item	Code no.
Mixer chamber 5 ml (mounted at delivery in ÄKTA avant 150)	28-9562-46
Mixer chamber 15 ml	28-9803-09
O-ring 13.1 × 1.6 mm ***Note:*** *For Mixer chamber 0.6, 1.4, and 5 ml.*	28-9535-45
O-ring 13.1 × 1.6 mm High resistance (can be used as an alternative to 28-9535-45)	29-0113-26
O-ring 22.1 × 1.6 mm ***Note:*** *For Mixer chamber 15 ml.*	28-9818-57
Online filter kit	18-1027-11

Valves

ÄKTA avant 25

Item	Code no.
Column Valve **V9-C**	28-9565-06
pH Valve **V9-pH**	28-9565-08
Inlet Valve **V9-IA**	28-9565-10
Inlet Valve **V9-IB**	28-9620-06
Inlet Valve **V9-IS**	28-9620-07
Outlet Valve **V9-O**	28-9565-12
Injection Valve **V9-Inj**	28-9565-14
Inlet Valve **V9-A2**	28-9572-21
Inlet Valve **V9-B2**	28-9572-23
Inlet Valve **V9-S2**	28-9572-25
Inlet Valve **V9-X1**	28-9572-27

Item	Code no.
Inlet Valve **V9-X2**	28-9572-34
Column Valve **V9-C2**	28-9572-36
Outlet Valve **V9-O2**	28-9572-38
Outlet Valve **V9-O3**	28-9572-40
Versatile Valve **V9-V**	29-0113-53
Loop Valve **V9-L**	29-0113-58

ÄKTA avant 150

Item	Code no.
Column Valve **V9H-C**	28-9792-41
pH Valve **V9H-pH**	28-9792-46
Inlet Valve **V9H-IA**	28-9792-48
Inlet Valve **V9H-IB**	28-9792-77
Inlet Valve **V9H-IS**	28-9792-79
Outlet Valve **V9H-O**	28-9792-81
Injection Valve **V9H-Inj**	28-9792-83
Inlet Valve **V9H-A2**	28-9793-03
Inlet Valve **V9H-B2**	28-9793-15
Inlet Valve **V9H-S2**	28-9793-20
Inlet Valve **V9H-X1**	28-9793-26
Inlet Valve **V9H-X2**	28-9793-28
Column Valve **V9H-C2**	28-9793-30
Outlet Valve **V9H-O2**	28-9793-32
Outlet Valve **V9H-O3**	28-9793-37
Versatile Valve **V9H-V**	29-0906-91
Loop Valve **V9H-L**	29-0906-89

Injection valve accessories

Item	Code no.
Sample loop, 10 µl	18-1120-39
Sample loop, 100 µl	18-1113-98
Sample loop, 500 µl (mounted at delivery)	18-1113-99
Sample loop, 1 ml	18-1114-01
Sample loop, 2 ml	18-1114-02
Sample loop, FEP 10 ml	18-1161-24
Superloop, M6 fitting, 10 ml	19-7585-01
Superloop, 1/16" fittings (ÄKTA design), 50 ml	18-1113-82
Superloop, M6 fitting, 150 ml	18-1023-85
Fill port, INV-907	18-1127-66
Injection kit, INV-907	18-1110-89
Connector 1/16" Male/Luer Female	28-9858-12

Built-in fraction collector

Item	Code no.
Cassette tray	28-9542-09
Cassette, for 50 ml tubes (2-pack) ***Note:*** *For 6 tubes*	28-9564-02
Cassette, for 15 ml tubes (2-pack)	28-9564-04
Cassette for 5 ml tubes (2-pack)	29-1334-22
Cassette, for 8 ml tubes (2-pack)	28-9564-25
Cassette for 3 ml tubes (2-pack)	28-9564-27
Cassette, for deep-well plate (2-pack)	28-9542-12

Item	Code no.
Rack, for 50 ml tubes ***Note:*** *For 55 tubes*	28-9803-19
Rack, for 250 ml bottles	28-9818-73

Fraction Collector F9-R

Item	Code no.
Fraction Collector F9-R	29-0113-62
Tube Rack Complete, 175 × 12 mm	19-8684-03
Tube Rack Complete, 95 × 10–18 mm	18-3050-03
Tube Rack Complete, 40 x 30 mm	18-1124-67
Bowl	18-3051-03
Tube Support	18-3054-02
Tubing Holder	18-6464-01
Tube Holder and Guide, 175 × 12 mm	19-7242-02
Tube Holder and Guide, 95 × 10–18 mm	19-8689-02
Tube Holder and Guide, 40 × 30 mm	18-1124-68
Drive sleeve	19-6067-02

pH monitor

Item	Code no.
pH electrode	28-9542-15
O-ring 5.3 × 2.4 mm	28-9564-97

UV monitor

Item	Code no.
UV flow cell U9-0.5, 0.5 mm for **U9-M**	28-9793-86
UV flow cell U9-2, 2 mm for **U9-M**	28-9793-80
UV flow cell U9-10, 10 mm for **U9-M**	28-9563-78
UV Monitor U9-L (fixed wavelength)	29-0113-60
UV flow cell 2 mm for U9-L	29-0113-25
UV flow cell 5 mm for U9-L	18-1128-24

Conductivity monitors

Item	Code no.
Conductivity Monitor **C9** (standard module)	28-9564-95
Conductivity monitor (**C9n**) (optional)	29-0113-63

External air sensors

Item	Code no.
Air Sensor **L9-1.2** mm	28-9565-02
Air Sensor **L9-1.5** mm	28-9565-00

I/O box

Item	Code no.
I/O-box E9	29-0113-61

Module components

Item	Code no.
Module Panel	29-0113-64
Dummy Module	28-9564-93
Extension Box	29-1108-06

Cables

Item	Code no.
Jumper 1 IEC 1394 (F-type)	28-9564-89
External module cable, short (F-type)	29-0124-74
External module cable, long (F-type)	29-0113-66

Flow restrictor

Item	Code no.
Flow Restrictor FR-902	18-1121-35

Barcode scanner

Item	Code no.
Barcode Scanner 2-D with USB	28-9564-52

UniTag

Item	Code no.
UniTag (sheet with 108 labels)	28-9564-91

Trays

Item	Code no.
Wet side waste tray	28-9564-87
Front side waste tray	28-9564-85

User Documentation

Item	Code no.
ÄKTA avant User Manual ***Note:*** *Covers ÄKTA avant 25 and ÄKTA avant 150.*	29-0351-84

Index

A

Advanced system settings, 467
Affinity chromatography
  predefined method, 444
Air sensors
  air sensor adapter, 47
  description, 63
  error codes, 413
  external air sensors, 118
  troubleshooting, 406
Air sensor settings, 461
ÄKTA avant
  Cassettes and trays, 87
  description, 13, 98
  maintenance, 259
  preparation, 201
  troubleshooting, 356
ÄKTA avant 25
  Tubes, 130
ÄKTA avant system
  main features, 9
  specifications, 419
Anion exchange
  predefined method, 445

C

Cassettes, 87
  quickrelease function, 89
Cation exchange
  predefined method, 445
Chromatofocusing
  predefined method, 446
CIP
  column CIP, 294
  column maintenance method, 449
  column predefined phase, 452
  system CIP, 286
  system maintenance method, 450
  system predefined phase, 453
Cleaning
  column, 234
Cold cabinet, 28
  precautions, 28
  prepare for a run, 29
Cold room, 28
Column
  cleaning, 234
  column CIP, 294
  column holder, 42
  Column valve, 71
  pressure alarm, 185
  storage, 234
Column CIP
  maintenance method, 449
  predefined phase, 452
Column performance test
  maintenance method, 449
  predefined phase, 452
Column preparation
  maintenance method, 449
  predefined phase, 452
Column valve
  description, 71
Column wash
  predefined phase, 452
Component volumes, 504
Conductivity monitor
  calibration, 324
  clean the conductivity flow cell, 315
  description, 96
  error codes, 414
Conductivity settings, 456
Connectors
  for ÄKTA avant, 430

D

Data collection settings, 469
Delay volume
  reference information, 500
  settings, 217
Delay volumes settings, 464
Desalting
  predefined method, 446
Documentation, 11

E

Elution
predefined phase, 452
Equilibration
predefined phase, 453
Extension box, 51

F

Flow cells
conductivity, 96
pH, 78
UV, U9-L, 138
Flow path
component volumes, 504
delay volumes, 502
illustration, 429
prepare the flow path, 155
Flow restrictor
check function, 276, 278
replace flow restrictor, 344
Fractionation
assemble tube rack, 131, 207
delay volume, 217
fractionation types, 215
prepare, 207
Fraction collection settings, 463
Fraction collector
cleaning, 273, 298, 301
error codes F9-R, 416
F9-R test, 247
preparation, 207
quickrelease function, 89
requirements on deep well plates, 92
requirements on tubes, 91
temperature control, 82
troubleshooting, 381, 391
Fraction collector F9-C
Cassettes and racks, 87
Fraction collector F9-R
connect tubing, 132
Full scan, 83

G

Gel filtration
predefined method, 446

H

Hardware installation
of a module, 101
Holders
air sensor adapter, 47
bottle holder, 47
column clamp, 43
column holder, 42
column holder rod, 44
Extension box, 51
flexible column holder, 45
loop holder, 50
multi-purpose holder, 49
ordering information, 517
rail extension, 49
tubing holder comb, 46
tubing holder spool, 46
Hydrophobic interaction chromatography (HIC)
predefined method, 447

I

I/O-box E9
ÄKTA avant installation, 142
connectors, 143
description, 142
error codes, 417
I/O-box settings, 462
Injection valve
description, 68
flow paths, 69
Inlet tubing
prepare, 157
prime inlet tubing B, 164
Inlet valves
description, 62
Inlet valve A, 63
Inlet valve B, 63
Quaternary valve, 64
Sample inlet valve, 66
troubleshooting, 379
Installation
prepare waste tubing, 157
Install of optional modules, 100
Instrument control panel
error codes, 417
Instrument control unit
error codes, 412
Instrument display

function, 36
location, 35
states, 36
Instrument overview
Fraction collector F9-R, 129
Instrument configurations, 14
Intelligent Packing
Predefined method, 449
Predefined phase, 453
Ion exchange
predefined method, 445

L

Log on
UNICORN, 160
Loop valve
description, 122
flow paths, 123

M

Maintenance
calibration procedures, 317
clean the instrument, 285
Maintenance Manager, 260
maintenance program, 265
replacement procedures, 332
semiannual maintenance, 279
Maintenance manager
handling maintenance notifications, 261
Maintenance methods
column CIP, 449
column performance test, 449
column preparation, 449
system CIP, 450
system preparation, 450
Manual instructions, 470
advanced, 487
alarms, 483
flow path, 474
fraction collection, 478
I/O-box, 482
monitors, 476
other, 491
pumps, 471
watch parameters, 490
Manual loop fill
predefined phase, 453
Manual Loop Fill
predefined method, 447
Methods
affinity chromatography, 444
anion exchange, 445
cation exchange, 445
chromatofocusing, 446
create a method, 224
create method, 223
desalting, 446
gel filtration, 446
hydrophobic interaction chromatography (HIC), 447
Intelligent Packing, 449
maintenance methods, 223
manual loop fill, 447
predefined maintenance methods, 448
predefined methods, 223, 444
purification methods, 223
reverse phase chromatography (RPC), 448
Method settings
predefined phase, 451
Miscellaneous
predefined phase, 453
Mixer
choose Mixer chamber, 155
description, 58
error codes, 413
replace mixer, 335
replace the inline filter, 272
replace the o-ring, 337
specifications, 422
troubleshooting, 402
Module panel
troubleshooting, 379
Modules
conductivity monitor, 96
injection valve, 68
loop valve, 122
mixer, 58
outlet valve, 74
pH valve, 78
pumps, 54
UV monitor, 94

versatile valve, 126
Monitors
conductivity, 96
troubleshooting, 360
UV, 94

N

Node ID
change Node ID, 513
check Node ID, 513
description, 100, 510
Notes and tips, 8

O

Optional configurations
install optional modules, 101
Ordering information
cables, 523
Conductivity monitor, 522
external air sensors, 522
flow restrictor, 523
fraction collector, 521
Fraction collector, 521
holders, 517
I/O-box E9, 522
mixer, 518
module panel, 523
multi module front, 523
pH monitor, 521
trays, 524
tubing, 515–516
UniTag, 523
UV monitor, 520, 522
valves, 519
Outlet tubing
prepare, 157
Outlet valve
description, 74

P

Performance tests
fraction collector F9-R, 247
overview, 237
UV U9-L system, 257
Phases
column CIP, 452
column performance test, 452
column preparation, 452
column wash, 452
elution, 452
equilibration, 453
Intelligent Packing, 453
manual loop fill, 453
method settings, 451
miscellaneous, 453
predefined phases, 451
sample application, 453
system CIP, 453
system preparation, 453
pH monitor
calibration, 318
clean the pH electrode, 304
description, 80
error codes, 413
replace the pH electrode, 283
storage of the pH electrode, 234, 302
troubleshooting, 372
pH settings, 458
pH valve
description, 78
flow paths, 79
troubleshooting, 372, 379
Power and ICU
troubleshooting, 404
Prepare the system
ÄKTA avant, 201
flow path, 155
fraction collector, 207
inlet tubing, 157
Mixer, 155
outlet tubing, 157
sample application, 187
Start UNICORN, 160
UV monitor U9-L, 156
UV monitor U9-M, 156
Pressure alarm
set, 185
Pressure monitor
error codes, 413
Pressure monitors
calibration, 320
check the pressure monitors, 320
description, 76
troubleshooting, 376
Prime inlet tubing B, 164

Prime sample inlets, 171
Process picture, 231
Pump and pressure settings, 459
Pumps
  change pump rinsing solution, 270
  clean check valves, 309
  description, 54
  error codes, 414
  purge system pumps, 164
  replace check valves, 346
  replace pump rinsing system tubing, 349
  specifications, 421
  troubleshooting, 394

Q

Quaternary valve
  BufferPro, 65
  function, 64
  quaternary gradients, 66
QuickRelease function, 89
Quick scan, 83

R

reference information
  injection volumes and peak broadening, 499
Reference information, 418
  back pressure, 508
  chemical resistance guide, 437
  component specifications, 421
  delay volumes, 500
  pressure regulation, 507
  system specifications, 419
Reverse phase chromatography (RPC)
  predefined method, 448
Run
  after run procedures, 233
  available curves, 496
  available run data, 492
  choose method, 228
  monitor a run, 230
  perform a run, 227
  perform manual run, 229

S

Safety
  notices, 8
Sample application
  flow paths, 69
  injection valve, 68
  predefined phase, 453
  sample loading, 187
  sample loop, 197
  superloop, 192
Sample loop
  sample loading, 197
Scanning of cassettes
  full scan, 83
  quick scan, 83
Software overview
  software modules, 10
Storage
  column, 234
  pH electrode, 234
  system, 234
Superloop
  sample loading, 192
  troubleshooting, 403
System CIP
  maintenance method, 450
  predefined phase, 453
System configuration
  overview, 99
  system properties, 105
  system settings, 107
System Control module
  manual instructions, 470
  process picture, 231
System preparation
  before preparation, 154
  maintenance method, 450
  predefined phase, 453
System pumps
  operating ranges, 54
System settings
  advanced, 467
  air sensor, 461
  conductivity, 456
  data collection, 469
  delay volumes, 464
  fraction collection, 463
  I/O-box, 462
  pH, 458

pump and pressures, 459
UV, 455
wash settings, 468
watch parameters, 466
System storage, 234
System test
UV U9-L, 257

T

Technical specifications
component specifications, 421
system specifications, 419
Trays, 87
Troubleshooting
error codes, 412
fraction collector, 381
Fraction collector, 391
instrument communication, 410
monitors, 360
other components, 401
pumps, 394
Tube rack
assembly, 131, 207
Tubing
for ÄKTA avant, 430
replace tubing, 333

U

UNICORN
connect to system, 162
Log on, 160
Start, 160
User information, important, 7
UV detector U9-D
error codes, 415
UV monitor
calibration, 94, 156, 328
clean UV flow cell, 280
description, 94
replace UV flow cell, 339, 342
second, 137
UV monitor U9-L
description, 137, 156
error codes, 416
system test, 257
troubleshooting, 365
UV monitor U9-M
description, 94, 156
error codes, 414
troubleshooting, 360
UV settings, 455

V

Valves
Column valve, 71
error codes, 412
extra Column valve, 112
extra Inlet valves, 108
extra Outlet valves, 115
injection valve, 68
Inlet valves, 62
loop valve, 122
outlet valve, 74
overview, 60
pH valve, 78
Quaternary valve, 64
replace a valve module, 351
specifications, 423
versatile valve, 126
Versatile valve
description, 126
flow paths, 126

W

Wash settings, 468
Waste tubing, 157
prepare, 158
Watch parameters settings, 466

For local office contact information, visit
www.gelifesciences.com/contact

GE Healthcare Bio-Sciences AB
Björkgatan 30
751 84 Uppsala
Sweden

www.gelifesciences.com/avant

GE and GE monogram are trademarks of General Electric Company.

ÄKTA, UNICORN, HiPrep, HiScreen, HiTrap, Superloop and Whatman are trademarks of General Electric Company or one of its subsidiaries.

Decon is a trademark of Decon Laboratories, Limited.

Elgiloy is a trademark of Elgiloy Limited Partnership.

Eppendorf is a trademark of Eppendorf AG.

Hastelloy is a trademark of Haynes International Inc.

Kautex is a trademark of Kautex Textron GmbH & Co. KG.

Nalgene is a trademark of Thermo Fisher Scientific Inc.

Seahorse Bioscience is a trademark of Seahorse Bioscience Corporation.

Triton is a trademark of Union Carbide Chemicals and Plastic Company Inc.

Tween is a trademark of Uniqema Americas LLC.

Microsoft and Windows are registered trademarks of Microsoft Corporation.

All other third party trademarks are the property of their respective owner.

Any use of UNICORN is subject to GE Healthcare Standard Software End-User License Agreement for Life Sciences Software Products. A copy of this Standard Software End-User License Agreement is available on request.

© 2013-2015 General Electric Company – All rights reserved.
First published May 2013

All goods and services are sold subject to the terms and conditions of sale of the company within GE Healthcare which supplies them. A copy of these terms and conditions is available on request. Contact your local GE Healthcare representative for the most current information.

GE Healthcare Europe GmbH
Munzinger Strasse 5, D-79111 Freiburg, Germany

GE Healthcare UK Limited
Amersham Place, Little Chalfont, Buckinghamshire, HP7 9NA, UK

GE Healthcare Bio-Sciences Corp.
800 Centennial Avenue, P.O. Box 1327, Piscataway, NJ 08855-1327, USA

GE Healthcare Japan Corporation
Sanken Bldg. 3-25-1, Hyakunincho Shinjuku-ku, Tokyo 169-0073, Japan

29-0351-84 AD 03/2015 a55