2424 Evaporative Light Scattering Detector

Overview and Maintenance Guide

715004755v01

Waters

THE SCIENCE OF WHAT'S POSSIBLE.™

Copyright © Waters Corporation 2022
All rights reserved

General Information

Copyright notice

© 2022 WATERS CORPORATION. PRINTED IN THE UNITED STATES OF AMERICA AND IN IRELAND. ALL RIGHTS RESERVED. THIS DOCUMENT OR PARTS THEREOF MAY NOT BE REPRODUCED IN ANY FORM WITHOUT THE WRITTEN PERMISSION OF THE PUBLISHER.

The information in this document is subject to change without notice and should not be construed as a commitment by Waters Corporation. Waters Corporation assumes no responsibility for any errors that may appear in this document. This document is believed to be complete and accurate at the time of publication. In no event shall Waters Corporation be liable for incidental or consequential damages in connection with, or arising from, its use. For the most recent revision of this document, consult the Waters Web site (waters.com).

Trademarks

Alliance, ACQUITY, MassLynx, PIC, “THE SCIENCE OF WHAT’S POSSIBLE.”, Waters Quality Parts, and Waters are registered trademarks of Waters Corporation, and ACQUITY Arc, busLAC/E, and PowerStation are trademarks of Waters Corporation.

PHILLIPS is a registered trademark of Phillips Screw Company.

Other registered trademarks or trademarks are the sole property of their owners.

Customer comments

Waters’ Technical Communications organization invites you to report any errors that you encounter in this document or to suggest ideas for otherwise improving it. Help us better understand what you expect from our documentation so that we can continuously improve its accuracy and usability.

We seriously consider every customer comment we receive. You can reach us at tech_comm@waters.com.

Contacting Waters

Contact Waters with enhancement requests or technical questions regarding the use, transportation, removal, or disposal of any Waters product. You can reach us via the Internet, telephone, or conventional mail.

Waters contact information

Contacting medium	Information
Internet	The Waters Web site includes contact information for Waters locations worldwide. Visit www.waters.com.
Telephone and fax	From the USA or Canada, phone 800-252-4752, or fax 508-872-1990. For other locations worldwide, phone and fax numbers appear in the Waters Web site.
Conventional mail	Waters Corporation Global Support Services 34 Maple Street Milford, MA 01757 USA

Safety considerations

Some reagents and samples used with Waters instruments and devices can pose chemical, biological, or radiological hazards (or any combination thereof). You must know the potentially hazardous effects of all substances you work with. Always follow Good Laboratory Practice, and consult your organization's standard operating procedures.

Safety hazard symbol notice

Documentation needs to be consulted in all cases where the ⚠ symbol is used to find out the nature of the potential hazard and any actions which have to be taken.

Considerations specific to the 2424 Evaporative Light Scattering Detector

Power cord replacement hazard

Warning: To avoid electric shock, use the SVT-type power cord in the United States and HAR-type (or better) cord in Europe. The main power cord must be replaced only with one of adequate rating. For information regarding what cord to use in other countries, contact your local Waters distributor.

FCC radiation emissions notice

Changes or modifications not expressly approved by the party responsible for compliance, could void the users authority to operate the equipment. This device complies with Part 15 of the FCC Rules. Operation is subject to the following two conditions: (1) this device may not cause harmful interference, and (2) this device must accept any interference received, including interference that may cause undesired operation.

Electrical power safety notice

Do not position the instrument so that it is difficult to disconnect the power cord.

Equipment misuse notice

If equipment is used in a manner not specified by its manufacturer, protections against personal injury inherent in the equipment's design can be rendered ineffective.

Safety advisories

Consult Appendix A for a comprehensive list of warning advisories and notices.

Operating this instrument

When operating this instrument, follow standard quality-control (QC) procedures and the guidelines presented in this section.

Applicable symbols

Symbol	Definition
	Manufacturer
	Date of manufacture
EC REP	Authorized representative of the European Community
CE	Confirms that a manufactured product complies with all applicable European Community directives
UK CA	UK Conformity Assessed marking confirms that a manufactured product is in conformity with the applicable requirements for products sold within Great Britain

Symbol	Definition
ABN 49 065 444 751 or	Australia EMC compliant
	Confirms that a manufactured product complies with all applicable United States and Canadian safety requirements
	Consult instructions for use
	Alternating current
	Electrical and electronic equipment with this symbol may contain hazardous substances and should not be disposed of as general waste. For compliance with the Waste Electrical and Electronic Equipment Directive (WEEE) 2012/19/EU, contact Waters Corporation for the correct disposal and recycling instructions.
SN	Serial number
REF	Part number catalog number

Audience and purpose

This guide is intended for personnel who install, operate, and maintain 2424 Evaporative Light Scattering (ELS) detectors.

Intended use of the 2424 Evaporative Light Scattering Detector

Waters designed the 2424 Evaporative Light Scattering detector (ELS) to analyze and monitor many compounds. The 2424 ELS detector is not intended for use in diagnostic applications.

Calibrating

To calibrate LC systems, follow acceptable calibration methods using at least five standards to generate a standard curve. The concentration range for standards must include the entire range of QC samples, typical specimens, and atypical specimens.

Quality control

Routinely run three QC samples that represent subnormal, normal, and above-normal levels of a compound. If sample trays are the same or very similar, vary the location of the QC samples in the trays. Ensure that QC sample results fall within an acceptable range, and evaluate precision from day to day and run to run. Data collected when QC samples are out of range might not be valid. Do not report these data until you are certain that the instrument performs satisfactorily.

EMC considerations

Canada spectrum management emissions notice

This class A digital product apparatus complies with Canadian ICES-001.

Cet appareil numérique de la classe A est conforme à la norme NMB-001.

ISM Classification: ISM Group 1 Class B

This classification has been assigned in accordance with IEC CISPR 11 Industrial Scientific and Medical (ISM) instruments requirements.

Group 1 products apply to intentionally generated and/or used conductively coupled radio-frequency energy that is necessary for the internal functioning of the equipment.

Class B products are suitable for use in both commercial and residential locations and can be directly connected to a low voltage, power-supply network.

EC authorized representative

EC REP

Waters Corporation
Stamford Avenue
Altrincham Road
Wilmslow SK9 4AX UK

Telephone:	+44-161-946-2400
Fax:	+44-161-946-2480
Contact:	Quality manager

Table of Contents

General Information ii

Copyright notice ii

Trademarks ii

Customer comments ii

Contacting Waters iii

Safety considerations iii
- Safety hazard symbol notice iii
- Considerations specific to the 2424 Evaporative Light Scattering Detector iii
- FCC radiation emissions notice iv
- Electrical power safety notice iv
- Equipment misuse notice iv
- Safety advisories iv

Operating this instrument iv
- Applicable symbols iv
- Audience and purpose v
- Intended use of the 2424 Evaporative Light Scattering Detector v
- Calibrating v
- Quality control v

EMC considerations vi
- Canada spectrum management emissions notice vi
- ISM Classification: ISM Group 1 Class B vi

EC authorized representative vi

1 2424 ELS Detector Optics Principles 13

1.1 Principles of evaporative light scattering detection 13
- 1.1.1 Overview 13
- 1.1.2 Capabilities 13
- 1.1.3 ELS detection process 13
- 1.1.4 Detection 15
- 1.1.5 ELS detection limitations 16

1.2 Detector description 17
- 1.2.1 Signal processing and noise calculations 18
- 1.2.2 Calibrating the photomultiplier tube (PMT) 18
- 1.2.3 Filter baseline noise 18
- 1.2.4 Electronics and data acquisition 18

1.2.5 Nebulizer 19
1.2.6 Optics bench 19
1.2.7 Temperature control 20
1.2.8 Startup diagnostics 20
1.2.9 Lamp energy and performance 21
1.2.10 Rear panel 21

1.3 References 22

2 Setting up the Detector 25

2.1 Before you begin 25

2.2 Unpacking and inspecting 26

2.3 Selecting a site within a laboratory 26
2.3.1 Site selection requirements 26
2.3.2 Power requirements 27
2.3.3 Gas requirements 28

2.4 Stacking system modules 28

2.5 Making the gas supply connection 29

2.6 Venting the exhaust hose 30

2.7 Connecting to the electricity source 33

2.8 Installing the nebulizer assembly 34

2.9 Connecting the siphon drain 36

2.10 Connecting the drip tray 37

2.11 Connecting the nebulizer gas to the nebulizer 38

2.12 Connecting a column or second detector 38

2.13 Making signal connections 39
2.13.1 Connecting the Ethernet cable 39
2.13.2 Network installation guidelines 40
2.13.3 Connecting to other instruments 42
2.13.4 Connecting the Waters column heater module 48

3 Operating the Detector 49

3.1 Starting up the detector 50
3.1.1 Initializing the detector 50
3.1.2 Using the display 51
3.1.3 Detector Home and Message screen icons 52

3.2 Using the keypad 53

3.3 Navigating the user interface 57
3.3.1 Navigating to and from the Home screen 58

3.4 Preparing to start a run 59
3.4.1 Primary and secondary functions 60

3.5 Setting up a run 61
3.5.1 Setting the nebulizer and drift tube temperature 61
3.5.2 Setting the gain and gas pressure 63
3.5.3 Setting the column heater module temperature 64
3.5.4 Resetting the stop flow output switch 64
3.5.5 Operating the trace and scale functions 64
3.5.6 Setting the data rate 66
3.5.7 Setting the filter time constant 66
3.5.8 Setting the switch output 67
3.5.9 Setting the analog signal output 67
3.5.10 Setting auto zero options 67

3.6 Configuring the detector 68
3.6.1 Configuring event inputs 68
3.6.2 Configuring stop flow output 69
3.6.3 Setting pulse periods 69
3.6.4 Selecting the type of nebulizer 70
3.6.5 Setting the display contrast 70
3.6.6 Displaying system information 70
3.6.7 Using help 71

3.7 Operating the detector 71
3.7.1 Standalone operation 71
3.7.2 Auto-optimize gain and LSU-FS 71

3.8 Programming methods and events 74
3.8.1 Overview of methods 74
3.8.2 Programming timed events 74
3.8.3 Programming threshold events 76
3.8.4 Storing a method 77
3.8.5 Retrieving a method 77
3.8.6 Viewing events within a method 78
3.8.7 Resetting a method 78
3.8.8 Clearing events 79

3.9 Conserving lamp life 79

3.10 Changing chromatographic conditions 81

3.11 Shutting down the detector 82

3.12 Periodic maintenance 82

4 Maintaining the Detector 85

4.1 Contacting Waters technical support 85

4.2 Spare parts 85

4.3 Replacing the lamp cartridge 86

4.4 Replacing the nebulizer 87

4.5 Cleaning the nebulizer ultrasonically 90

4.6 Cleaning the drift tube 93

4.7 Servicing the vapor trap 94

4.8 Replacing fuses 94

4.9 Cleaning the instrument's exterior 95

5 Diagnostic Functions and Troubleshooting 97

5.1 Error messages 97
5.1.1 Startup error messages 97
5.1.2 Operational error messages 97

5.2 User-selectable diagnostic functions 98
5.2.1 Overview 98
5.2.2 "Sticky diagnostics" tests 99
5.2.3 Running diagnostic tests 99
5.2.4 Running the Auto Gain diagnostic function 100
5.2.5 Input and output diagnostic functions 100
5.2.6 Lamp, display, and keypad diagnostic functions 102
5.2.7 Gas and temperature control diagnostic functions 104
5.2.8 Sample and reference energy diagnostic function 105
5.2.9 Generate Test Peaks diagnostic function 105

5.3 General troubleshooting 106
5.3.1 Power surges 106
5.3.2 Detector troubleshooting 106

5.4 Chromatography troubleshooting 107
5.4.1 Abnormal baseline 108

5.4.2 Erratic or incorrect retention times 111

6 Optimizing detection and preparing solvents 117

6.1 Optimizing detector performance 117
6.1.1 Optimize the mobile phase 117
6.1.2 Sample pretreatment 117
6.1.3 Column treatment 117

6.2 Selecting a solvent 118

6.3 Solvent degassing 121
6.3.1 Solvent degassing methods 121
6.3.2 Solvent degassing considerations 122

6.4 Optimization protocol 123
6.4.1 Nebulizer gas pressure 123
6.4.2 Nebulizer temperature 123
6.4.3 Drift tube temperature 124
6.4.4 Selecting the optimum temperature 124

A Safety Advisories 125

A.1 Warning symbols 125
A.1.1 Specific warnings 126

A.2 Notices 127

A.3 Bottles Prohibited symbol 128

A.4 Required protection 128

A.5 Warnings that apply to all Waters instruments and devices 128

A.6 Warnings that address the replacing of fuses 131

A.7 Electrical and handling symbols 133
A.7.1 Electrical symbols 133
A.7.2 Handling symbols 134

B Specifications 137

B.1 Physical specifications 137

B.2 Environmental specifications 137

B.3 Electrical specifications 137

B.4 Operational specifications 138

B.5 Optical component specifications 139

1 2424 ELS Detector Optics Principles

To use the 2424 ELS detector effectively, you must understand the principles that underlie the operation of the detector's optics and electronics.

1.1 Principles of evaporative light scattering detection

1.1.1 Overview

ELS detection works by nebulizing the solvent flow from a liquid chromatography (LC) system and entraining the resultant droplets in a gas stream. Mobile phase is then evaporated from the droplets. When an analyte is less volatile than the mobile phase, it remains in the gas stream as a "dry" solute particle and flows to the detector chamber. Once there, the particles scatter the light beam. The amount of scattered light is measured and bears a relationship to the concentration of material eluting.

1.1.2 Capabilities

The 2424 ELS detector is compatible with virtually all modes of chromatography and flow injection analysis. The detector responds to all compounds that are, relative to their mobile phase, sufficiently nonvolatile at the conditions of analysis. Applications for ELS detection include combinatorial libraries of small molecules, natural product extracts and libraries, food products, and related materials. For detecting compounds that exhibit little to no UV/Vis response and do not ionize well for mass spectrometry, the ELS detector complements HPLC for analyzing sugars, antibiotics, antivirals, lipids, phospholipids, biomolecules, and natural products. You can use ELS detection in a system that includes a mass spectrometer and absorbance detector, applying it as a qualitative tool to demonstrate the purity or complexity of a sample. You can achieve quantitation by generating a calibration plot, as explained later in this guide. Note, however, that the curve will not be linear because ELS detectors give a non-linear response.

ELS detection performs well in isocratic or gradient elution with a wide variety of mobile phases and additives. Waters recommends using mass spectrometry-compatible volatile mobile-phase modifiers.

1.1.3 ELS detection process

The three separate regions of an ELS detector are nebulization, desolvation, and detection. These three regions are positioned so that the chromatographic effluent is

nebulized and mobile phase is evaporated so that dry solute particles, consisting only of analytes, reach the light source for scattering.

1.1.3.1 Low temperature nebulization

In the detector's nebulization region, the chromatographic effluent is transformed into a fine aerosol. A concentric tube, or flow-type nebulizer, mixes chromatographic effluent with a carrier gas (usually nitrogen) developing a series of droplets that forms the aerosol that enters a narrow-orifice drift tube.

Figure 1–1: Nebulization region and drift tube (representative)

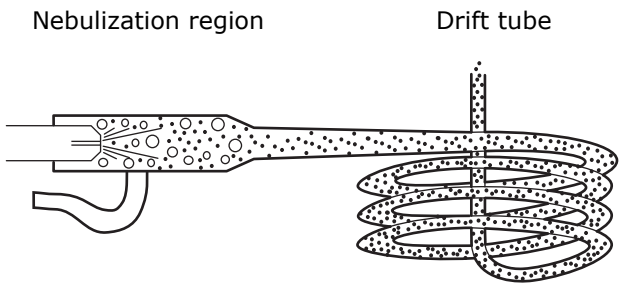

The concentric flow nebulizer allows you to control the carrier gas flow versus the chromatographic effluent flow rate. High gas flow produces small droplets, requiring less heat to evaporate the solvent. Conversely, low gas flow produces large droplets, requiring more heat to evaporate the solvent.

1.1.3.2 Desolvation

In the desolvation region, the mobile phase evaporates, leaving dried solute particles in the drift tube.

As the aerosol drops exiting the nebulizer pass through the drift tube, they become smaller. The carrier gas sweeps the dried, aerosolized solute particles along to the instrument's detection region.

Evaporation occurs as a function of time, temperature, and pressure of the carrier gas. It is therefore important to use HPLC mobile phases that easily and quickly evaporate and desolvate. Solvents of fairly low boiling point and low viscosity are best. They include the more commonly used HPLC mobile phases: water, acetonitrile, methanol, ethanol, and THF. Viscous and high-boiling solvents might fail to fully separate from the analyte molecules or species before the detection step. This adds to the background noise and decreases the analyte signal response, which causes low sensitivity (slope of the calibration plot) and high limits of detection (LOD). The evaporated HPLC solvents are condensed and captured in the recommended solvent trap and exhaust routing. Nevertheless, small amounts of residual solvent can persist, and these should be exhausted into a fume hood to prevent their escape into the laboratory.

1.1.4 Detection

The analyte particles enter the detection region where a light source impinges on the particles. The light is thus scattered and focused onto a photomultiplier tube (PMT), where its intensity is measured.

The size (diameter) of the analyte particles determines how the light is scattered. The detector measures the intensity of the scattered light at 60° relative to the excitation beam, to minimize polarization effects and stray light. Particles of different sizes exhibit different angular distributions of the scattered light, and particles whose sizes and shapes vary have different light-scattering cross sections. In general, larger particles scatter more light, yielding more intense signals and peak responses.

A photomultiplier tube (PMT) converts the scattered light signal to a voltage that can be recorded and analyzed. The stronger the scattering, the more intense the final signal on the ELS detection chromatogram. The scattered light is a rough measure of the mass of material represented by a chromatographic peak. To some degree, this "mass" response can be compound-independent. However, many factors can also affect the mass response, particularly the density of the analyte in a small dried particle. For example, a popped kernel of corn has a lower density than the unpopped kernel from which it originated. Yet, because the popped kernel is larger, in most cases it would scatter more light. You should also remember that the output of an ELS detector has no direct relation to the molecular weight of an analyte.

1.1.4.1 Types of light scattering

The three possible regimes of light scattering are,

- Rayleigh,
- Mie,
- refraction-reflection.

Figure 1–2: Light scattering direction

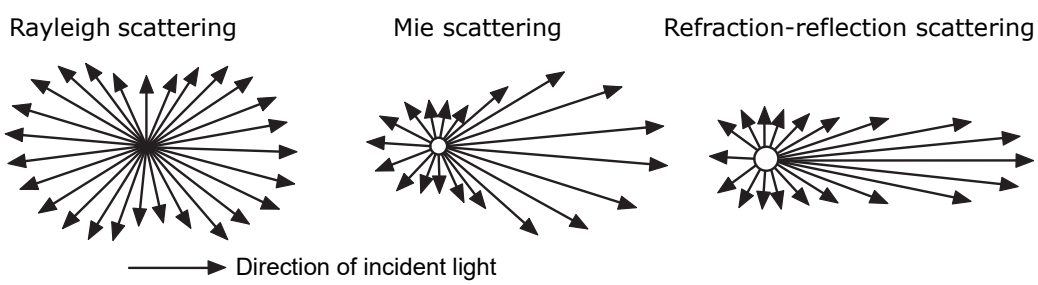

For a nebulizer that produces an average droplet diameter of D_0, the diameter of an average, resulting dry analyte particle is:

$D = D_0(c/p)^{1/3}$ where,

D_0 = Average liquid droplet diameter,

c = Concentration of the analyte,

p = Density of the dry analyte.

For any given analyte peak, the response of an ELS detector can be that of all three light scattering regimes. The light-scattering type depends on the size of the particles going through the light beam. The ratio of particle diameter, D, to the incident wavelength, λ, or $\frac{D}{\lambda}$, defines the type of scattering that results.

- Rayleigh scattering occurs for the smallest particles where $\frac{D}{\lambda} < 0.1$. The scattered light from a particle is proportional to D^6, and consequently the scattered signal is proportional to c^2.
- Mie scattering occurs for particles where $\frac{D}{\lambda} > 0.1$, but < 1.0. The scattered light is proportional to D^4, and the scattered signal is proportional to $c^{4/3}$.
- Refraction-reflection scattering occurs for particles where $\frac{D}{\lambda} > 1.0$. The scattered light is proportional to D^2, and the scattered signal is proportional to $c^{2/3}$.
- As a chromatographic peak elutes from a column, the concentration of the analyte it represents changes. Concentration goes from near-zero at the baseline to a maximum that corresponds to column efficiency, injection volume, retention time, and concentration of the sample when injected. From the maximum level, the concentration then returns to near-zero. If the concentration is high enough, the diameter of a dry analyte particle can vary through all three scattering regimes— Rayleigh, Mie, and refraction-reflection scattering. It is this variance that prevents linearity in ELS detection calibration plots over more than one order of magnitude.

1.1.5 ELS detection limitations

Consider these limitations when implementing global ELS detection separation methods:

- ELS detection lacks linearity over wide concentration ranges. When you use the detector for assays, you may need to experiment with a variety of “best fits” using linear, quadratic, and log-log responses for the compounds of interest. You might also need to establish groupings for expected concentration ranges.
- ELS detection is a destructive technique; the analyte is sacrificed to generate the scattering particles. Ideally, therefore, the ELS detector should be the final detector in a series. Alternatively, you can place the ELS detector upstream of others, provided you split the column effluent so that the ELS detector receives its own stream from the LC.
- Any particle can interfere with the sample signal, including particulates in poor-grade chromatographic solvents because the detector responds equally to all particulates. This lack of selectivity can cause problematic background noise.
- The detector’s sensitivity to the particulates increases noise and, consequently, signal-to-noise variation for a given method arising from differences in the quality of mobile phases. Moreover, stationary phase components can leach from the column and contribute particulates to the sample flow.

- You can reduce the load of unwanted particulates by filtering LC effluent and the instrument's carrier gas.
- ELS detection cannot detect compounds whose volatility resembles that of the mobile phase. When the analyte and mobile phase have similar volatility, it is impossible to evaporate the mobile phase from droplets without also evaporating the analyte.
- In many cases the detector is minimally sensitive to baseline drift caused by gradient changes in an LC separation. However, its performance is not completely independent of the effects of changing solvent composition, which affects the nebulizer's ability to form droplets and influence their size.

1.2 Detector description

The detection of a sample peak occurs as follows:

1. Eluent from the column flows into the nebulizer where a steady supply of gas converts it into a fine aerosol. Carefully controlled gas flow and flow rates determine the size of eluent droplets found in the aerosol.

   Warning: Fire and explosion hazard. Do not use air as the carrier gas when the mobile phase contains flammable components.

2. Droplets are vaporized in the evaporation drift tube, leaving a rising column of particles, suspended in gas and vaporized solvent, to pass into the center of the light scattering chamber.
3. Two condensing lenses, L1 and L2, focus light from the lamp through a slit.

Figure 1–3: 2424 ELS detection process (representative)

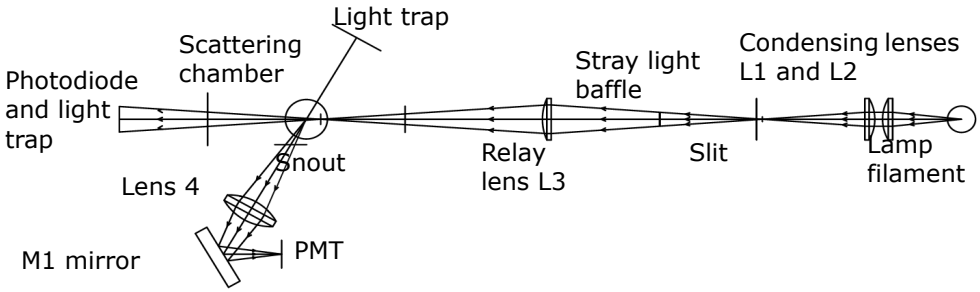

4. Lens L3 relays the light from the slit to the center of the scattering chamber. A baffle between the slit and relay lens minimizes stray light reaching the scattering chamber.
5. Only light scattered at a 60° angle relative to the incident light is channeled through the snout and collector lens, L4. The positioning and design of the snout, together with the aid of two light traps, minimize stray light that can be detected. The first light trap houses a photodiode to intercept a portion of the stray incident light by monitoring lamp intensity variations. The second light trap minimizes stray light opposite the collection optics.

6. The collector lens focuses light onto the M1 mirror to change the direction of light before reflecting it onto the photomultiplier tube.
7. The PMT converts the light to an electrical signal.
8. Remaining gaseous effluent is vented.

1.2.1 Signal processing and noise calculations

Power source fluctuations can introduce noise in the detector output and be a major source of noise at high signal levels. To offset their effect, a reference signal tracks lamp fluctuations and corrects the sample (PMT) signal accordingly.

1.2.2 Calibrating the photomultiplier tube (PMT)

The full scale sensitivity of the instrument is controlled by the gain setting, which increases the voltage to the PMT to amplify response. The instrument gain is achieved by controlling the high voltage supply to the PMT. However, the PMT response is not linear, so each unit must be individually calibrated to determine the required voltage settings for each gain value. PMT calibration is performed by Waters after the assembly and alignment of the detector and whenever the PMT or any PC boards are replaced.

1.2.3 Filter baseline noise

On the General tab of the ELS Instrument Method Editor, you can apply an optional noise filter (the Time Constant parameter) to the data acquired.

See: For more details, see online Help.

1.2.4 Electronics and data acquisition

The detector's electronics consist of the following components:

- DC power supply – Provides all DC voltages required for the analog and digital circuitries.
- Preamplifier board – Collects and processes the analog input signals from the PMT and photodiode to the microprocessor for further signal conditioning. Sample and reference signals are integrated and A/D conversion is performed simultaneously. This ensures the best rejection of common mode noise in the two beams, leading to a very quiet baseline.
- Controller board – Provides the drive circuitry for all modules in the system, such as the lamp, heaters, cooler, keypad, display, PMT, fans, external column heater, etc. It provides power to the CPU board and the preamplifier board. It also interfaces between the preamplifier board and the CPU board.
- CPU board – Contains the microprocessor, serial RS232 and Ethernet communications, battery backed nonvolatile RAM (in which the user parameters and calibration values are saved), and Flash RAM (in which the firmware resides).
- Display and keypad – Provides you with direct control of the system when you use it in stand-alone mode. You can use the keypad to access the control

system, program methods, calibrate, and troubleshoot the detector, while the display shows function status.

1.2.5 Nebulizer

Both high-flow and low-flow nebulizers are available. The high-flow nebulizer is standard in the 2424 ELS detector and is designed for flow rates ranging from 300 to 3000 μL/min. The low-flow nebulizer is designed for 50 to 500 μL/min and gives the highest sensitivity performance.

1.2.6 Optics bench

The detector's optics bench consists of three major systems:

- Illumination
- Light scattering chamber
- Collections

1.2.6.1 Illumination system

The illumination system uses these components to direct broadband light from the lamp into the light scattering chamber:

- Tungsten halogen lamp
- Entrance mask
- Two convex lenses, L1 and L2, acting as a condenser
- Slit
- Baffle
- Convex relay lens L3

1.2.6.2 Light scattering chamber

The light scattering chamber is the equivalent of a flow cell in other detectors. It provides an environment where the sample in the gas stream and the incident light beam can interact. The chamber contains these components,

- two light traps,
- reference photodiode.

To prevent the solvent and analyte from condensing on the chamber walls or optical surfaces, the chamber is heated to 50 °C (122 °F) and cannot be varied. A thermistor for temperature regulation and an over-temperature switch are included in its heating circuit.

1.2.6.3 Collections system

The collections system collects scattered light from the scattering chamber and directs it to the PMT for conversion to an electrical signal. It consists of these components:

- Snout

- Biconvex collector lens, L4
- Mirror M1
- PMT

1.2.7 Temperature control

To vaporize and evaporate the solvent, the nebulizer and drift tube have temperature control.

1.2.7.1 Nebulizer

You can use a variable control heater to heat the nebulizer. This heater, represented as a power function, can heat the sample solution to improve mass flow into the drift tube. The power function indicates the power available to the nebulizer heater circuit. In certain cases, the nebulization process of the mobile phase can be endothermic, as with 100% organic solvents such as methanol and acetonitrile. These solvents require more power than other eluents.

You can also cool the nebulizer when faster equilibration times are required. This reduces the amount of solvent that is sprayed into the drift tube in the vaporization process and allows the drift tube temperature to run lower, therefore increasing the sensitivity of semi-volatile samples.

1.2.7.2 Drift Tube

You can set the drift tube heater up to 100° C to evaporate any residual solvent. RTD (resistance temperature detector) sensors provide temperature feedback to the heater control to ensure the desired temperature is maintained. The RTD is placed at the end of the drift tube, where the temperature is hottest, so it can give accurate feedback of the most extreme temperature to which the particles will be exposed. This is particularly important for semivolatile substances.

1.2.8 Startup diagnostics

On starting the detector, the presence of many electronic devices and components is verified. Some can self calibrate, a process that takes place at this time. The startup diagnostics include these tests:

- Central processing unit (CPU) test
- Serial communication interface (SCI) test
- Electrically erasable programmable read-only memory (EEProm) test
- RAM test
- Display test pattern
- Application program checksum verification (firmware)
- Lamp test
- Photodiode test
- PMT test

The signal of the lamp is measured, and the normalization constant is adjusted accordingly to compensate for lamp intensity variations. This minimizes the influence

of lamp intensity changes on detected signal levels. All settings are restored to the values present when the unit was shut down, except for the heater setpoints and gas flow, you must specify.

Recommendation: Turn the power off and on once a week to compensate for lamp aging.

1.2.9 Lamp energy and performance

In conventional designs of ELS detectors, the signal-to-noise performance of the instrument is directly proportional to the lamp energy input to the instrument. Lamp energy input to the detector can be affected by these factors:

- Age and efficiency of the lamp
- Improperly maintained optics
- Normal degradation of optical components (including the photomultiplier tube)

Optical components degrade slowly. In conventional ELS detectors, response increases by incrementally increasing the gain. However, a sample's response varies with energy throughput. If the lamp energy is degraded, peak response degrades accordingly. If lamp intensity diminishes, peak response decreases and noise increases. During normal operation, lamps are usually replaced when the reference energy falls below a user-set threshold. The useful lamp life depends on the method's specific requirements for noise performance. Eventually, the detector's performance becomes unacceptable and the lamp replacement is necessary.

Tip: It is good practice to inspect the detector's general condition when lamps are replaced.

Predicting when the detector's performance degrades to an unacceptable level based solely on reference energy is unsatisfactory. Each user's analyses require different levels of sensitivity. Determining reference energy alone to evaluate performance assumes that lamps exhibit the same longevity and degradation patterns. Waters therefore designed the detector to operate as independently of lamp output as possible. Ultimately, the detector's performance is a function of unique application requirements.

Signal-to-noise measurements are the best way to evaluate performance and set boundaries for acceptable operational sensitivity limits. Waters guarantees 2000 hours of lamp life, or one year since date of purchase, whichever comes first.

1.2.10 Rear panel

The following figure shows the rear panel locations of the connectors used to operate the detector with external devices.

Figure 1–4: 2424 ELS detector rear panel

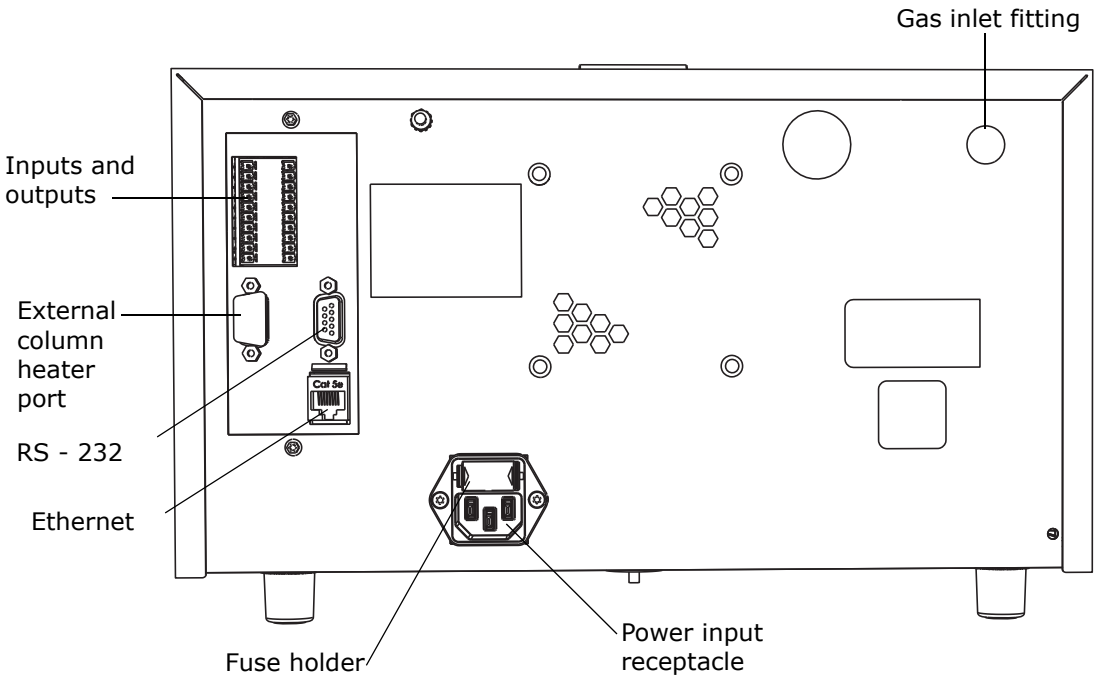

1.3 References

J.R. Rubinson and K.A. Rubinson, *Contemporary Chemical Analysis*, Simon & Schuster, Prentice-Hall, Inc., New Jersey, 1998.

K.A. Rubinson and J.R. Rubinson, *Contemporary Instrumental Analysis*, Simon & Schuster, Prentice-Hall, Inc., New Jersey, 2000.

G.D. Christian, *Analytical Chemistry, Sixth Edition*, John Wiley & Sons, Inc. New York, 2003.

C.G. Enke, *The Art and Science of Chemical Analysis*, John Wiley & Sons, Inc., New York, 2001.

Handbook of Instrumental Techniques for Analytical Chemistry, Edited by F. Settle, Prentice Hall Publishers, Upper Saddle River, NJ, 1997.

HPLC Methods for Pharmaceutical Analysis, Edited by G. Lunn and N. Schmuff, Wiley-Interscience Publishers, J. Wiley & Sons, New York, 1997. (CD-ROM)

C.A. Poole and S.K. Poole, *Chromatography Today*, Elsevier Science Publishing Co., Amsterdam and New York, 2001.

High Performance Liquid Chromatography, Edited by P.R. Brown and R.A. Hartwick, Wiley-Interscience, New York, 1989.

A Century of Separation Science, Edited by H. Issaq, Marcel Dekker, Inc., New York, Chapter 44, pp. 693-709, 2001.

Detectors for Liquid Chromatography, Edited by E. Yeung, J. Wiley & Sons, New York, 1986.

B.A. Bidlingmeyer, *Practical HPLC Methodology and Applications*, Wiley & Sons, NY, 1992.

U. Neue, *HPLC Columns, Theory, Technology, and Practice*. Wiley-VCH Publishers, New York, 1997.

L. Snyder, J.J. Kirkland, and J. Glajch, *Practical HPLC Method Development, Second Edition*, Wiley-Interscience Publishers, New York, 1997.

Reaction Detection in Liquid Chromatography, Edited by I.S. Krull, Marcel Dekker, New York, 1986.

Liquid Chromatography Detectors, Edited by T.M. Vickrey, Marcel Dekker, New York, 1983.

S. Ahuja, *Selectivity and Detectability in HPLC*. J. Wiley & Sons, New York, 1989.

R.P.W. Scott, *Liquid Chromatography Detectors*, Elsevier Scientific Publishing Company, Amsterdam, The Netherlands, 1977.

HPLC Detection-Newer Methods, Edited by G. Patonay, VCH Publishers, Weinheim, Germany, 1992.

Element-Specific Chromatographic Detection, Edited by P.C. Uden, ACS Symposium Series 179, American Chemical Society, Washington, DC, 1992.

M. Dreux and M. Lafosse, "Evaporative light scattering detection of carbohydrates in HPLC." In *Carbohydrate Analysis, High Performance Liquid Chromatography and Capillary Electrophoresis*, Edited by Z. El Rassi, Journal of Chromatography Library, Volume 58, Elsevier Science Publishers, Amsterdam, The Netherlands, 1995, Chapter 13. Second Edition, 2002.

A. Stolyhwo, H. Colin, and G. Guiochon, "Use of light scattering as a detector principle in liquid chromatography." J. Chromatogr., 265, 1 (1983).

G. Guiochon, A. Moysan, and C. Holley, "Influence of various parameters on the response factors of the evaporative light scattering detector for a number of nonvolatile compounds." J. Liquid Chromatogr., 11(12), 2547 (1988).

J.A. Koropchak, L.E Magnusson, M. Heybroek, S. Sadain, X. Yang, and M.P. Anisimov, "Fundamental aspects of aerosol-based light-scattering detectors for separations." *Advances in Chromatography*, Volume 40, Edited by P.R. Brown, E. Grushka, and Marcel Dekker, New York, 1998, Chapter 5.

2 Setting up the Detector

For optimal performance, you must prepare the detector by following the procedures in this chapter.

2.1 Before you begin

Requirement: To install the detector, you should know how, in general, to set up and operate laboratory instruments and computer-controlled devices and also how to handle solvents.

Before installing the detector, ensure that,

- it is not situated under a heating or cooling vent;
- the required components are present;
- none of the shipping containers or unpacked items are damaged.

2.2 Unpacking and inspecting

Warning: To avoid injury, Waters recommends that two people lift the 2424 ELS detector.

The shipping carton contains these items:

- 2424 ELS detector
- *Waters 2424 Evaporative Light Scattering Detector Operator's Guide* (this document)
- Startup kit
- Release notes

To unpack the detector and nebulizer:

1. Check the contents of the shipping cartons against the packing lists to ensure that you received all items.
2. Save the shipping cartons for future transport or shipment.

If you discover any damage or discrepancy when you inspect the contents of the cartons, immediately contact the shipping agent and your local Waters representative.

Customers in the USA and Canada should report damage and discrepancies to Waters Technical Service (800-252-4752). Others should phone their local Waters subsidiary or Waters corporate headquarters in Milford, Massachusetts (USA), or they may visit http://www.waters.com.

For complete information on reporting shipping damages and submitting claims, see *Waters Licenses, Warranties, and Support Services*.

2.3 Selecting a site within a laboratory

The reliable operation of your detector depends on a proper installation site and suitable power supply.

2.3.1 Site selection requirements

Install the detector in an area that meets the requirements in the table at the end of this section.

Notice: To avoid damaging the detector, the amount of weight stacked on top of it should not exceed 18 kg (40 pounds).

Place the detector close to the column outlet to minimize band broadening, which reduces the resolution of a chromatogram.

Tip: If your system includes more than one detector, connect the ELS detector so that it is the final detector in the series, because it nebulizes column effluent and exhausts it as gas vapor.

Table 2–1: Installation site requirements

Parameter	Requirement
Operating temperature range	4 to 30 °C (39 to 86 °F); avoid direct exposure to sunlight and heating and cooling vents
Operating humidity range	20 to 80%, non-condensing
Shipping and storage temperature range	-30 to 60 °C (-22 to 140 °F)
Shipping and storage humidity range	20 to 85%, non-condensing
Bench space	• 12.7 cm (5 inches) clearance at rear • At least 5 cm (2 inches) clearance is needed on the left-hand side of the detector to allow venting for nebulizer cooling. Blocking this vent could adversely affect nebulizer cooling.
Line frequency	50 to 60 Hz
Power consumption	200 VA (nominal)
Power	Grounded AC, 100 to 240 Vac, 50 to 60 Hz nominal 200 VA
Gas supply	450 to 690 kPa (4.5 to 6.9 bar, 65 to 100 psi), at the regulator, of dry, oil-free, filtered nitrogen or zero grade oil-free, filtered air
Ventilation	Locate near fume hood or exhaust system for proper venting of detector exhaust
Maximum altitude	2000 m (6561.6 feet)

2.3.2 Power requirements

The detector, which operates over the range 100 to 240 Vac, is shipped from the factory with two 5.00 A, 250 V fuses.

Warning: To avoid electrical shock, observe these precautions:

- Use power cord SVT-type in the United States and HAR-type (or better) in Europe. For other countries, contact your local Waters distributor.
- Power-off and unplug the detector before performing any maintenance on the instrument.
- Connect all components of the Alliance® HPLC system to a common ground.

Warning: For continued protection against fire, replace fuses only with those of the same type and rating.

The detector's two fuses are located above the power input receptacle on its rear panel.

Figure 2–1: Location of fuse holder on 2424 ELS detector rear panel

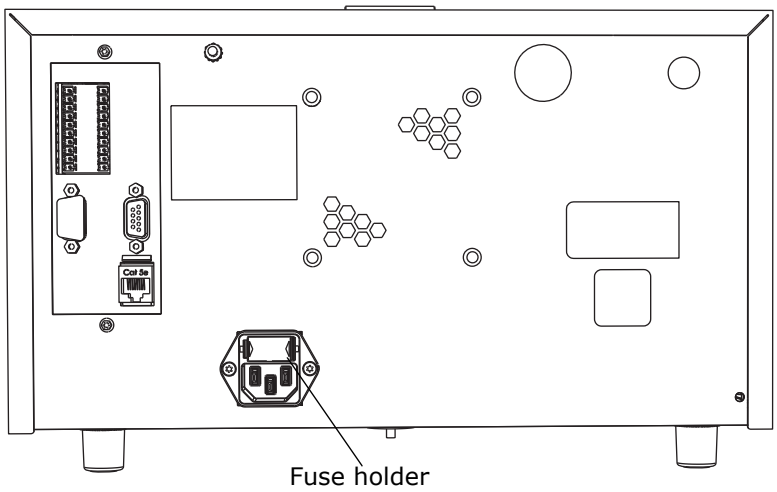

To replace a fuse in the detector, see page 94.

2.3.3 Gas requirements

Use a constant supply of dry, oil-free, filtered nitrogen (or zero-grade, oil-free, filtered air) to operate the detector. Other inert gases can also be used. Use an operating pressure, at the regulator, of between 450 to 690 kPa (4.5 to 6.9 bar, 65 to 100 psi).

Requirement: An external minimum supply of 448.2 kPa (4.48 bar, 65 psi) is required for the gas regulator to activate.

Warning: Use only inert gases in the detector. In particular, avoid those that would allow the combustion of combustible solvents and/or the oxidation of samples.

Notice:

- A pressure relief valve vents gas to protect the detector when the input pressure is too high. If you can hear gas leaking from the relief valve, lower the input pressure to avoid wasting gas.
- Gas cylinders are not recommended for extended operation of the detector due to the rapid consumption of gas. For example, a standard tank of nitrogen running a standard flow nebulizer at 170 kPa (1.7 bar, 25 psi) would last approximately 40 hours.

2.4 Stacking system modules

This procedure applies to system modules that are equipped with interlocking features.

Warning: To avoid spinal or muscular injury, do not attempt to lift a system module without assistance.

Warning: To avoid crushing your fingers beneath or between modules, use extreme care when installing a module in the system stack.

To stack the modules:

1. Place the rear feet of the module that you are adding atop the previously added module in the system stack, and slide it backward until its rear alignment pin rests in the rear alignment slot on the previously added module.

   Figure 2–2: Aligning pins with slots

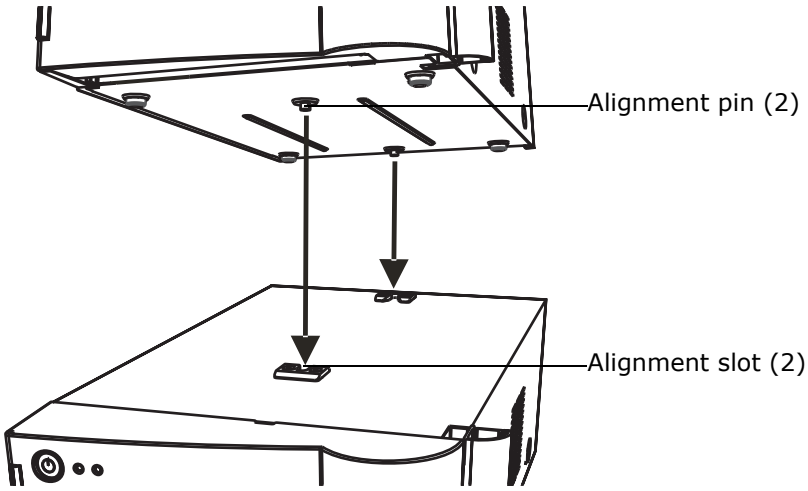

2. Lower the front of the module that you are adding so that its front alignment pin rests in the front alignment slot on the previously added module.
3. Repeats steps 1 and 2 for the remaining system modules.

2.5 Making the gas supply connection

The detector is connected to the gas supply via 6-mm plastic tubing (supplied in startup kit). The tubing attaches to the detector via a fitting on the back of the unit.

To make the gas supply connection:

1. Cut the 6-mm tubing squarely (that is, perpendicular to the tubing's horizontal axis).
2. Insert the tubing into the fitting until it bottoms.

Figure 2–3: Inserting the gas supply tube

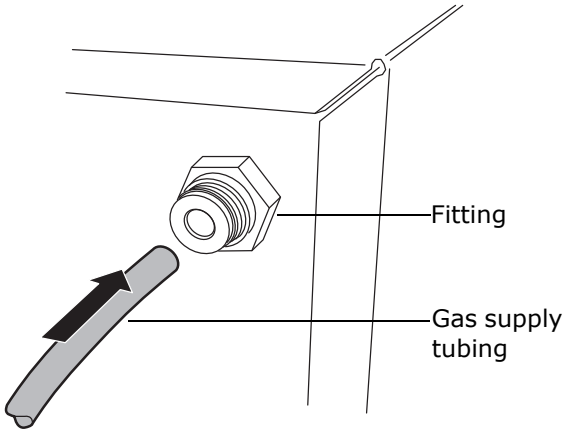

3. Pull the tubing to check engagement of the grab ring.
4. If you are using the system with an external filter, first connect the gas source to the filter, and then use the second piece of tubing in the kit to connect the filter to the back of the unit.

2.6 Venting the exhaust hose

To properly vent the exhaust vapor to waste, a vapor trap exhaust bottle is provided (startup kit). The vessel traps condensates that form from vented vapor exiting the detector.

Figure 2–4: Vapor trap bottle

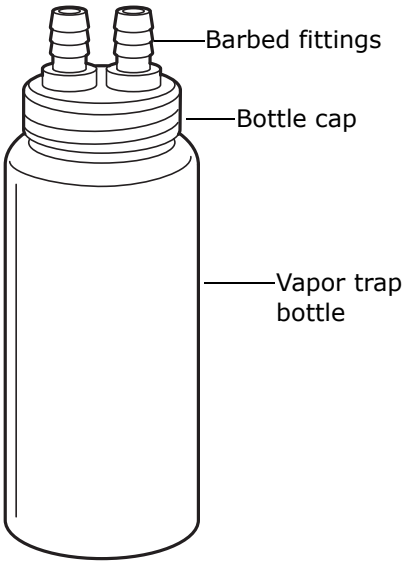

Notice:

- To prevent too strong a vacuum, always use the vapor trap. Too strong a vacuum can adversely affect the vapor flow through the drift tube. This could cause loss of sensitivity and excessive high-frequency noise in the baseline.
- To avoid condensate flowing backward into the detector and thus damaging it, run at least 61 cm (24 inches) of the instrument's exhaust hose vertically toward the bench top.

2.6.0.1 Exhaust Venting Requirements

Requirement: Ensure the instrument's exhaust hose runs straight down, toward the bench top, a minimum of 61 cm (24 inches).

- Attach the vapor trap bottle to the end of the exhaust hose.
- Place the vapor trap bottle's exit hose close to an evacuation source, but do not apply a vacuum.
- Direct the exhaust from the detector into a fume hood or exhaust vent.
- Ensure both hoses are free of restrictions.

Warning: Inhalation risk. Do not allow detector exhaust to enter the laboratory atmosphere.

To vent the exhaust hose:

1. Connect one end of the exhaust hose exiting from the rear of the detector directly onto one of the barbed fittings on the vapor trap bottle.

Figure 2–5: Vapor trap bottle and exhaust hose

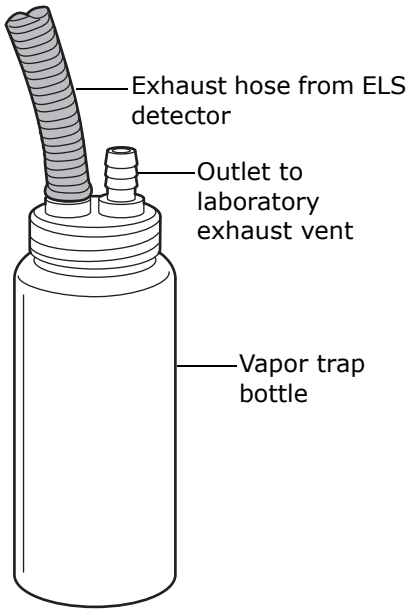

TP02725

Notice:

- To avoid excessive electronic noise, do not kink the exhaust hose, which creates an unintended trap. The hose must slope downward, without sharply bending, when exiting the detector.
- To avoid operational problems, do not cut the exhaust hose.

2. Using the 1.5 meter (5-foot) hose, attach one end of the tubing to the remaining fitting on the bottle cap.
3. Position the other end of the tubing at a perpendicular angle to a laboratory exhaust system that applies gentle vacuum. There should be a minimum negative pressure of –0.2 kPa (0 bar, –0.03 psi) between the detector and the laboratory exhaust system.

Notice: To avoid creating a stronger vacuum on the gas exiting the detector and likely carrying away valuable sample, do not place the tubing end inside the exhaust vent.

Figure 2–6: Exhaust system flow example

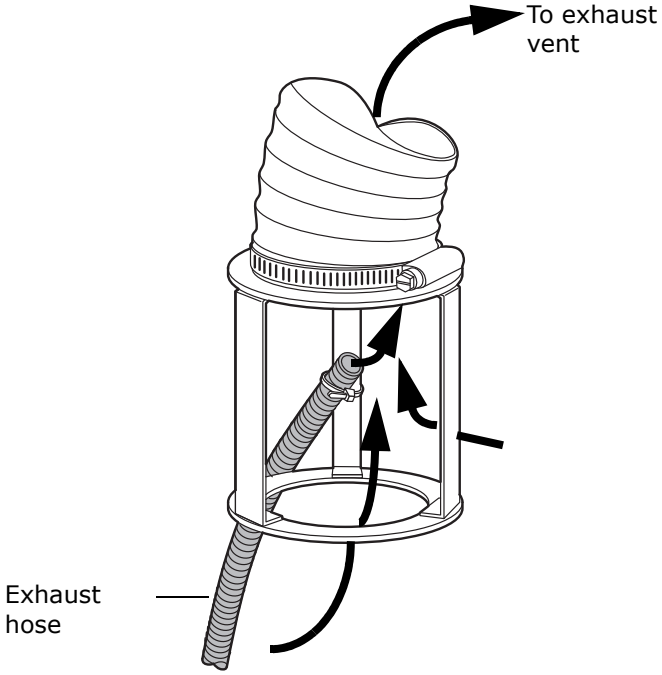

2.7 Connecting to the electricity source

The 2424 ELS detector requires a separate, grounded electricity source. The ground connection in the electrical outlet must be common and connected near the chromatographic system.

To connect to the electricity source:

Recommendation: Use a line conditioner or an uninterruptible power supply (UPS) for optimum long-term input voltage stability.

1. Power-off the detector.
2. Connect the female end of the power cord to the receptacle on the rear panel of the detector.

Figure 2–7: Location of power input on 2424 ELS detector rear panel

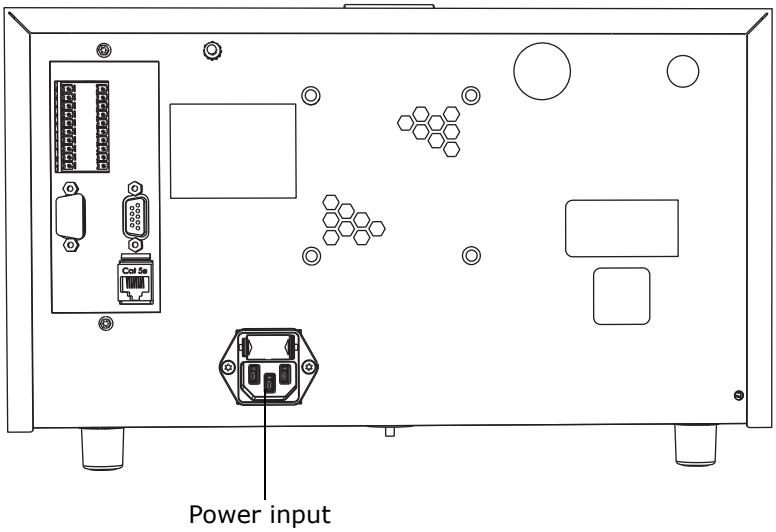

3. Connect the male end of the power cord to a suitable wall outlet.
4. Do not turn the detector on at this time.

2.8 Installing the nebulizer assembly

Waters offers two nebulizers for the 2424 ELS detector: a low-flow (for flow rates from 50 to 500 µL/min) and a high-flow (for flow rates from 300 to 3000 µL/min). The high-flow nebulizer is provided as standard equipment.

To install the nebulizer assembly:

1. Remove the nebulizer assembly from the shipping container.
2. Slide the packing ring onto the assembly.
3. Remove the protective cap from the assembly.
4. Remove the protective cap from the end of the nebulizer tube.

Figure 2–8: Nebulizer assembly with packing ring installed

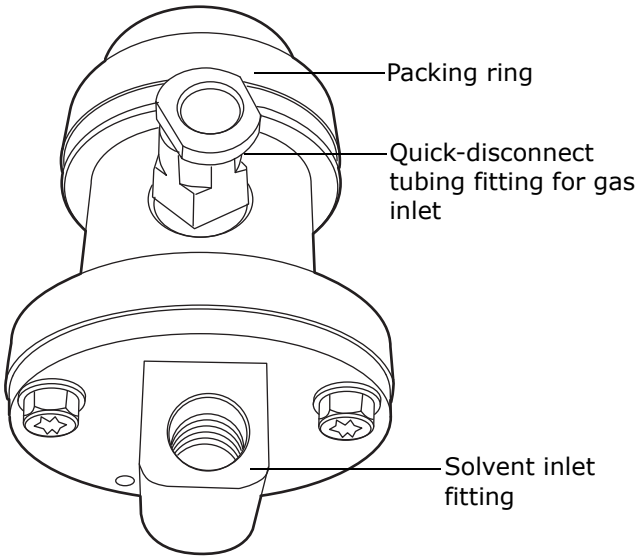

5. Align the two pins inside the nebulization chamber with the grooves in the nebulizer.

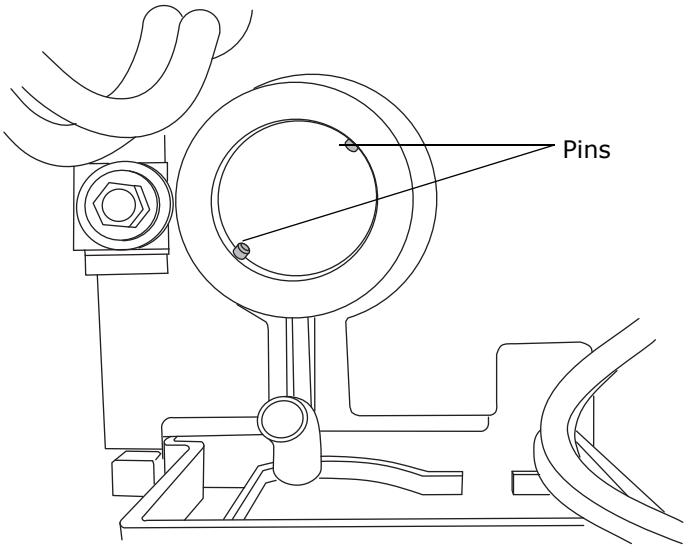

Note: The quick-disconnect tubing fitting will be at the twelve o’clock position.

6. Push the nebulizer into the nebulization chamber, and turn it clockwise until it snaps into place.

2.9 Connecting the siphon drain

Recommendation: At initial setup, fill the siphon with water or mobile phase. Failure to do so will delay the detector's satisfactory performance.

To route the siphon drain to the waste container:

1. Route the siphon drain tube to the right of the stack.

Figure 2–9: Siphon drain tube routing

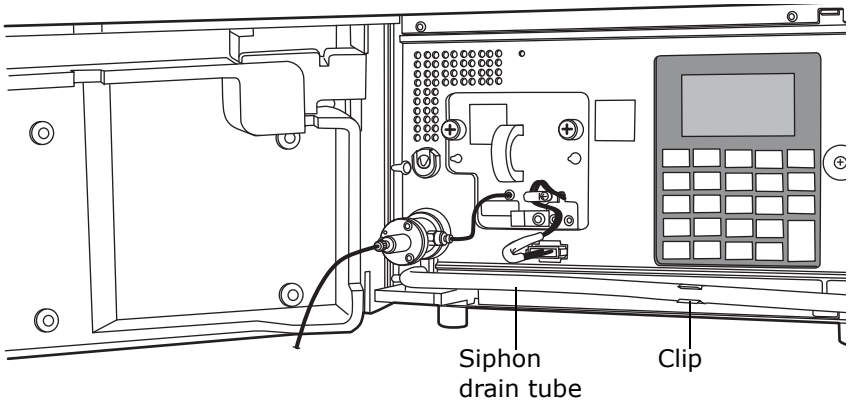

2. Insert the siphon drain tube into the clip.
3. Ensure the door is closed before operating the detector.

   Tip: An additional support for the siphon drain tube is in the detector door.
4. Insert the end of the convoluted tube onto the heat-formed siphon drain tube.
5. Route the convoluted tube to the waste container.

Figure 2–10: Waste container siphon tube connection

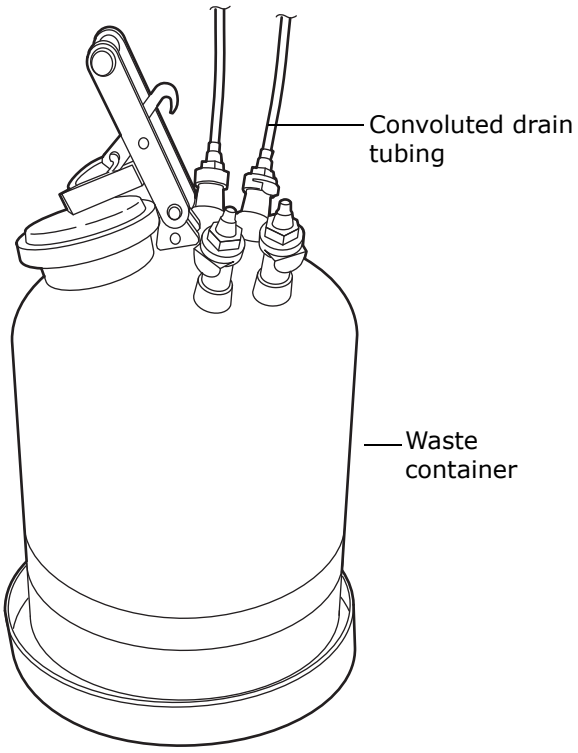

! **Notice:** To prevent excessive detector noise and drift tube flooding, ensure that the siphon tube is not immersed in the solvent waste.

2.10 Connecting the drip tray

The detector uses a drip tray underneath the nebulizer on the front panel to direct solvent to the front of the unit in the event of a leak.

Required tools and materials

- Sharp knife (not supplied)
- Tubing (not supplied)

To connect the drip tray:

1. Cut a length of tubing sufficient to reach between the drip tray and the waste container.
2. Unless the system requires alternate leak management routing, connect the tubing to the drip tray fitting and route to waste.

Figure 2–11: Metal fitting under nebulizer

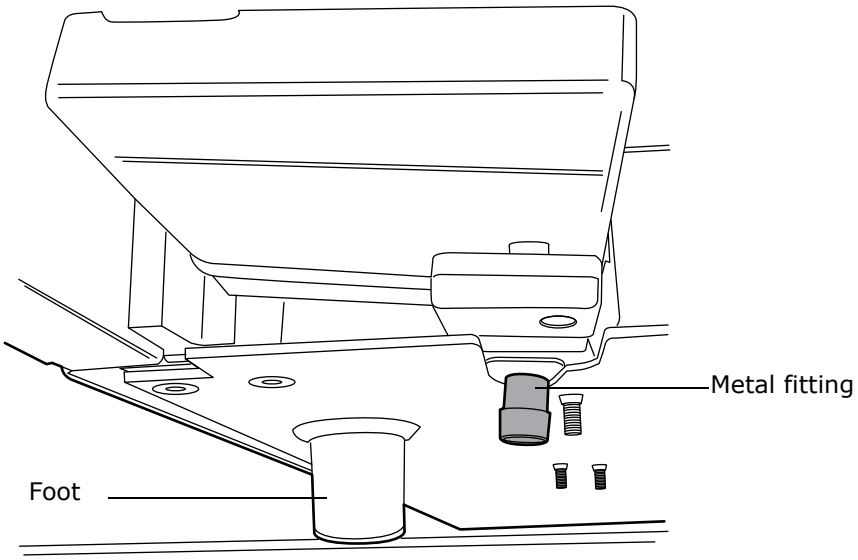

3. Insert the other end of the tubing into the waste container.

2.11 Connecting the nebulizer gas to the nebulizer

Notice: To avoid contaminating the detector, connect the chromatography system during operation. Gas flow in the nebulizer creates a slight vacuum that can attract solvent or dust from the detector's inlet port.

Insert the gas inlet tubing into the quick-disconnect tubing fitting on the right-hand side of the nebulizer.

2.12 Connecting a column or second detector

Tips:

- If your system includes more than one detector, connect the ELS detector so that it is the final detector in the series, because it nebulizes the column effluent and exhausts it as gas vapor.
- Do not allow solvent flow to continue if no gas flow is present.

Notice: In order to avoid particulate contamination, you should flush any columns you are connecting to the detector before connecting them.

Required tools and materials

- 5/16-inch open-end wrench

- Sample inlet tubing assembly
- For detectors that also must be last in line, a splitter will be required

To connect a column or second detector:

1. Insert one end of the inlet tubing assembly into the fluid fitting on the front of the nebulizer.

   Use the sample inlet tubing assembly supplied in the startup kit.
2. Tighten the compression screw 1/4-turn past finger tight.
3. Repeat step 2, inserting the other end of the inlet tubing assembly into the outlet fitting of the column or another detector.

2.13 Making signal connections

Tip: Connect the detector to the data system components through an Ethernet connection.

The following figure shows the rear panel location of the connectors used to operate the detector with external devices.

Figure 2–12: Location of connectors on 2424 ELS detector rear panel

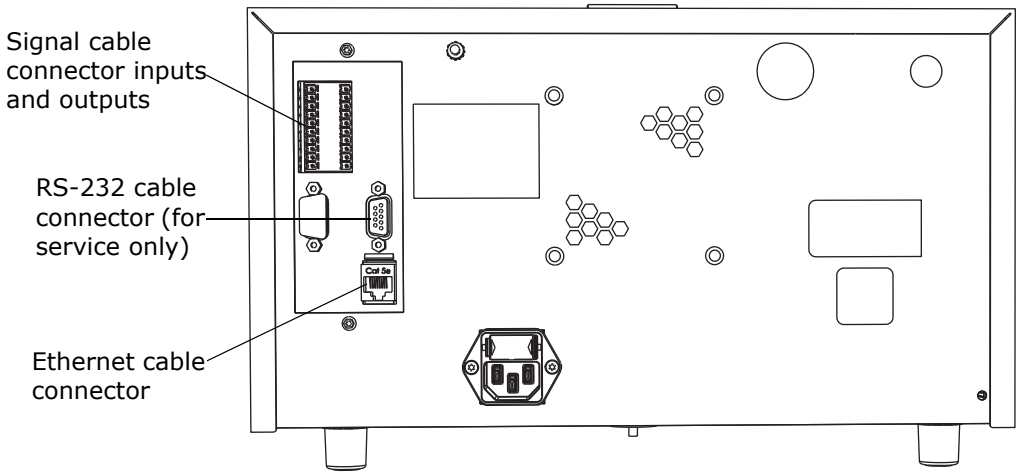

The signal connections you need to make to your detector depend on the signal connections available on the other instruments in your Alliance HPLC system.

2.13.1 Connecting the Ethernet cable

A Waters instrument communicates with the acquisition computer through the dedicated local area network (LAN). At the acquisition computer, the instrument network card provides the interface that makes communication possible.

You must install the Waters instrument software driver in the acquisition computer so that the computer can control the instrument. See the software installation instructions that accompany the instrument control software.

2.13.1.1 Single Waters instrument connection

In a single Waters instrument system configuration, the connection hardware requires only one standard, shielded Ethernet cable. This cable is contained in the startup kit.

Figure 2–13: Single Waters instrument connection

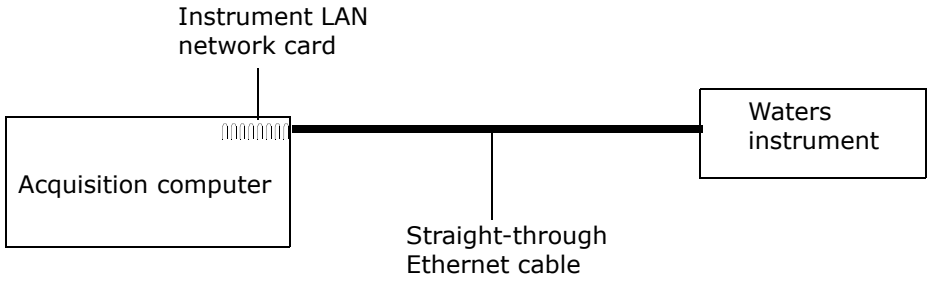

2.13.1.2 Multiple Waters instrument connections

In a system configuration with many Waters Ethernet instruments, an Ethernet switch is required to communicate multiple signals between Waters instruments and the acquisition computer.

Connection hardware requires one standard 100 base-T Ethernet cable per Waters instrument and a standard 100 base-T Ethernet cable to connect between the network switch and the acquisition computer.

You must install the Waters instrument control software in the acquisition computer so that the computer can control the Waters instrument. See the software installation instructions that accompany the software instrument driver disk.

2.13.2 Network installation guidelines

Configurations for multiple Waters instruments use a dedicated LAN, which requires a design based on the following guidelines:

- Ethernet cable
- A maximum distance of 100 meters (328 feet)

Requirement: You must use a network switch for multiple Ethernet instruments. Network hubs are not supported.

Figure 2–14: Mixed system of IEEE and Ethernet instruments

An inject-start trigger is needed for the 2424 ELS detector.

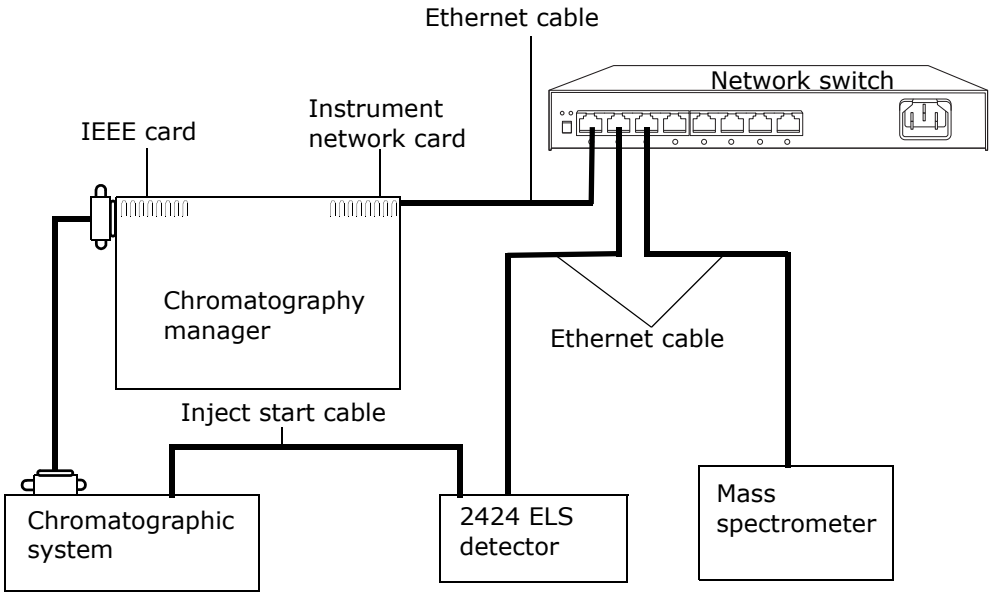

Figure 2–15: All Ethernet system

No inject-start trigger is required.

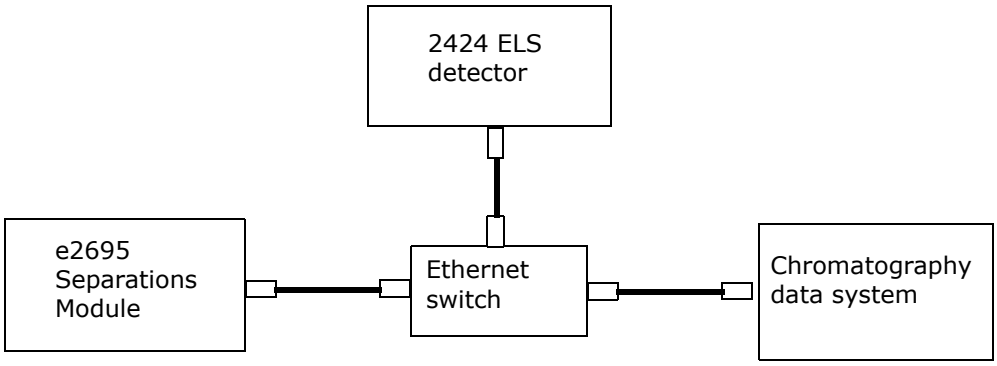

2.13.2.1 Making inject-start signal connections

When you are using an Ethernet data system with the 2424 ELS detector, the data system or controller must receive an inject-start signal from the manual injector, to initiate the data-collection and time-based programs.

The following table summarizes the inject-start connections for different system configurations.

Table 2–2: 2424 ELS detector inject-start connections

Inject-start output source	Inject-start input connection (on the 2424 ELS detector, connector A)
Waters Alliance Separations Module	Inject Start + / –
Waters manual injector, or third-party manual injector	Inject Start + / –

Requirement: If the injector is an e2695 separations module running in Ethernet mode, then the inject-start cable must not be connected. However, if the injector is an e2695 separations module running in IEEE mode, then the inject-start cable must be connected.

2.13.2.2 Connecting to a manual injector

If you are using a manual injector, connect the signal cables from the rear panel connector on the 2424 ELS detector to the injector, as described in the following table.

Table 2–3: 2424 ELS detector connections to a manual injector

2424 ELS detector (connector A)	Manual injector
Inject Start + (red)	One set of spade lug inject-start terminals
Inject Start – (black)	

For information about trigger signals from a manual injector, see page 47.

2.13.3 Connecting to other instruments

To connect the detector to other instruments, use the two analog-out/event-in (I/O) connectors and their corresponding pin-outs on the rear panel.

This section describes signal connections between the detector's rear panel and these items:

- Alliance e 2695 Separations Module
- eSAT/IN Module
- Waters, or other, manual injector
- Other manufacturer's integrator or A/D interface device

Warning: To avoid electrical shock, power-off the detector before making any electrical connections.

Requirement: To meet the regulatory requirements of immunity from external electrical disturbances that can affect the performance of this instrument, do not use cables longer than 3 meters (9.8 feet) when you make connections to the I/O connectors. In addition, ensure you connect the shield of the cable to ground at one instrument only.

Figure 2–16: 2424 ELS detector rear panel analog-out/event-in connectors

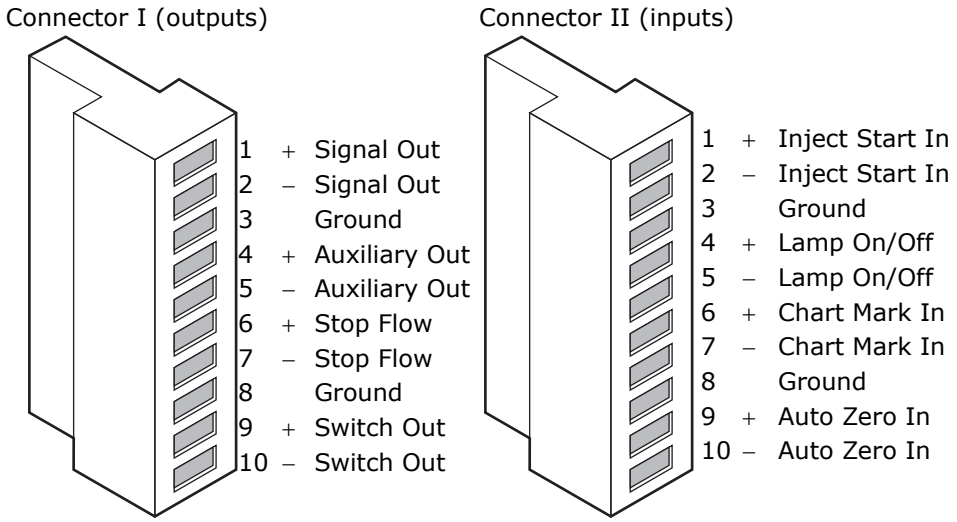

The following table describes the detector's I/O connections.

Table 2–4: Detector analog-out/event-in connections

Signal connections	Description
Inject start in	Activates timed events by triggering the run-time clock to start.
Lamp on/off	Enables and disables the lamp. When the input is active, the lamp is on.
Chart mark in	Adds a chart mark (at 10% of full scale) to either or both analog output channels (Signal Out 1 and Signal Out 2) and is configurable.
Auto zero in	Calculates an offset value that, when added to the sample signal, makes the resulting baseline signal zero.
Signal out	Provides a high resolution analog output for the sample signal. Output voltage range: –0.1 to 2.1 Vdc (selectable maximum data rates are 10, 20, 40, or 80 Hz).
Auxiliary out	Monitors the nebulizer, drift tube, column heater temperature, or gas pressure and is programmable. Output voltage range: –0.1 to 2.1 Vdc (fixed maximum data rate is 10 Hz).
Stop flow	Stops the flow to the chromatographic system when a low input gas pressure condition, temperature control error condition, or lamp failure occurs.
Switch out	Controls a timed event or threshold level and is a user-programmable auxiliary output.

2.13.3.1 Generating inject start

To generate the inject start function on the detector at the start of an injection from the Alliance e2695 Separations Module, make the connections shown in the following table and figure.

Tip: The firmware defaults to auto zero on inject.

Table 2–5: Detector connections to an Alliance e2695 separations module

Alliance e2695 separations module (connector B)	2424 ELS detector (connector II)
Pin 1 inject start (red)	Pin 1 inject start in + (red)
Pin 2 inject start (black)	Pin 2 inject start in – (black)

Figure 2–17: Inject start connections between the Alliance e2695 separations module and the detector

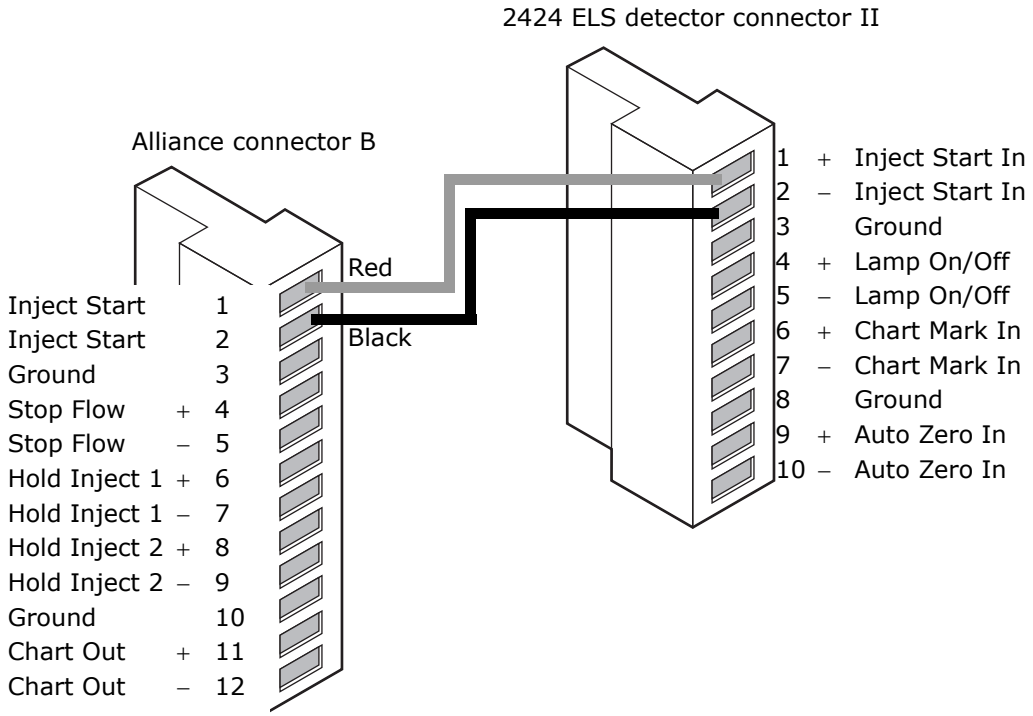

2.13.3.2 Generating stop flow

The detector has a dedicated switch output, called “stop flow” that becomes active when a heater, gas flow, or lamp failure occurs.

To use the stop flow function, make the connections shown in the following table and figure.

Warning: Fire and explosion hazard. Failure to connect the stop flow output could cause the detector to flood.

Requirement: To automatically stop the chromatographic flow to the system in the event of an error condition or hardware failure, the Stop Flow signal must be connected to the chromatographic pump.

Table 2–6: Detector connections to an Alliance e2695 separations module

Alliance e2695 separations module (connector B)	2424 ELS detector (connector I)
Pin 4 stop flow + (red)	Pin 6 stop flow + (red)
Pin 5 stop flow – (black)	Pin 7 stop flow – (black)

Figure 2–18: Stop flow connections between the Alliance e2695 separations module and the detector

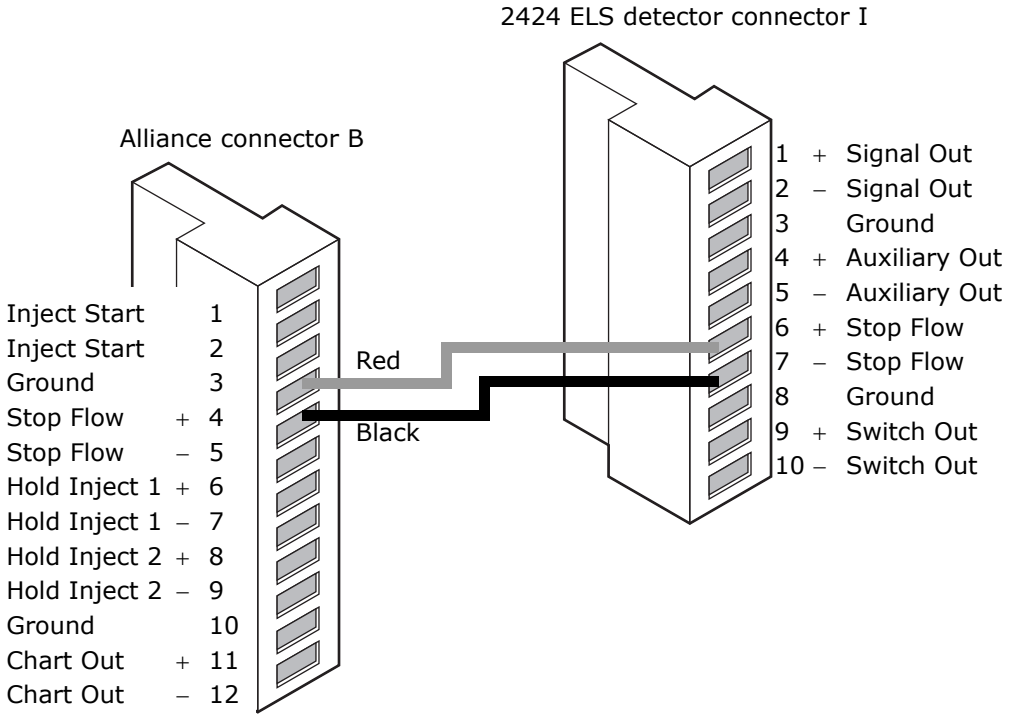

2.13.3.3 Connecting to the chromatography data system using an eSAT/IN module

To send an integrator analog output signal (–0.1 to +2.1 V) from the detector to a chromatography data system (through a two-channel eSAT/IN Module), make the connections shown in the following table and figure.

Table 2–7: Detector connections to the eSAT/IN module

eSAT/IN module connector	2424 ELS detector (connector I)
CHANNEL 1	Pin 1 signal out + (white)
	Pin 2 signal out – (black)

Figure 2–19: Analog output connections to the busSAT/IN module

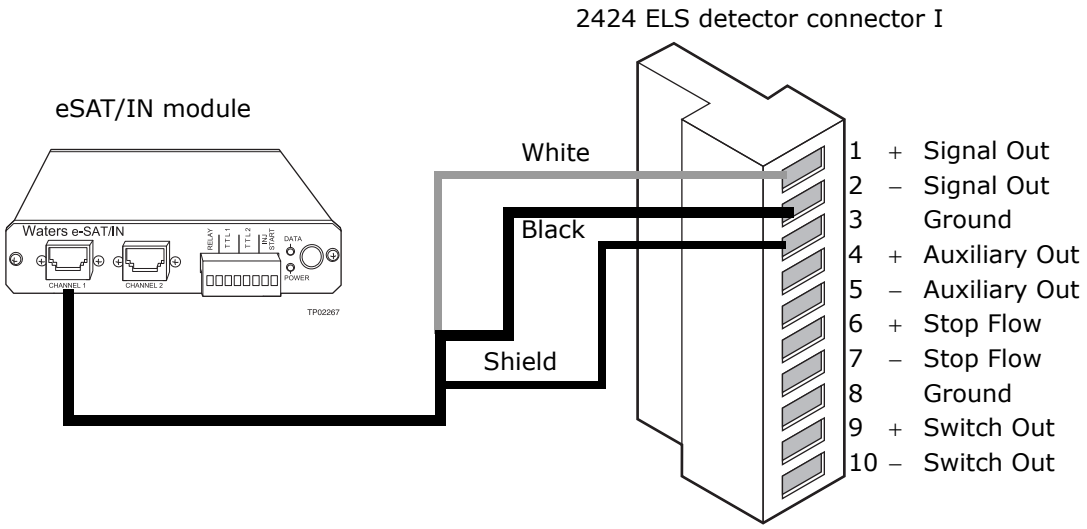

2.13.3.4 Connecting injection trigger signals

The detector accepts the following injection trigger signals from a manual injector:

- Inject start signal from a contact closure signal with each injection.
- Auto zero signal to adjust the zero offset of the detector each time the injector makes an injection.

Each time the detector receives a signal from an injector, it performs the corresponding auto zero or inject start function.

To send an auto zero or chart mark signal from an injector to the detector, make the connections shown in the following tables and figures.

Tip: The firmware defaults to auto zero on inject.

Table 2–8: Inject start connections to an injector (pulse duration 0 to 10 seconds)

2424 ELS detector (connector II)	Injector connector
Pin 1, inject start in + (red)	Two spade lug terminal connectors (both cables may be functionally identical) or similar connectors.
Pin 2, inject start in – (black)	

Figure 2–20: Inject start connections to an injector

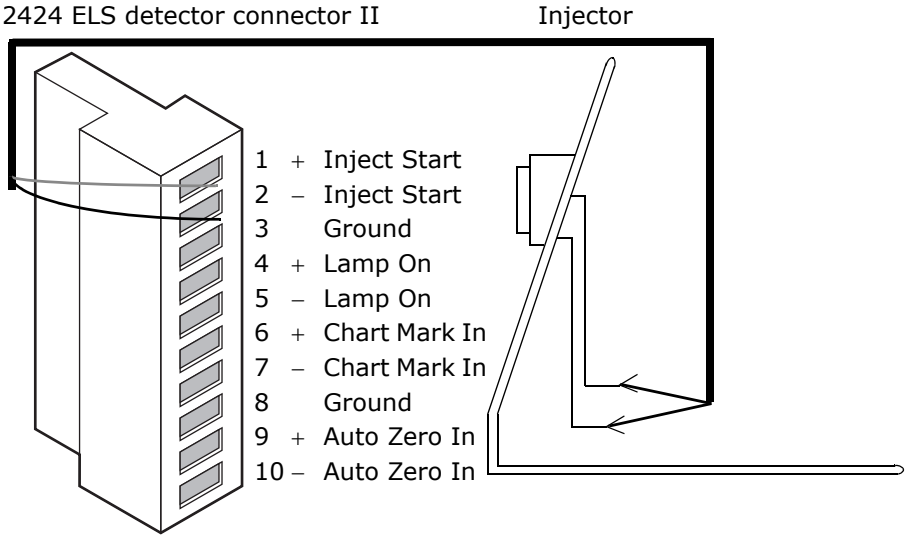

2.13.4 Connecting the Waters column heater module

The detector can control one Waters column heater module through the EXT port on the rear panel of the detector. The port is a standard, 9-pin, D-type connector.

3 Operating the Detector

After you install the detector, you are ready to set it up and operate it either as a standalone instrument or as part of a data system.

- As a standalone instrument – Use the detector as a standalone detector within a system, such as the Waters Alliance system, or with any fluid-handling unit, injector, integrator, or data system. You can program the front panel of the detector for standalone operation (see page 71).
- As part of an Empower System – Use the detector configured with Empower software to control and collect digital data. To configure the detector with this system, follow the instructions in the Empower online Help.
- As part of a MassLynx System – Use the detector configured with a MassLynx system to control and collect digital data. To configure the detector with MassLynx software, follow the instructions in the MassLynx online Help.

3.1 Starting up the detector

3.1.1 Initializing the detector

Before you power-on the detector, turn the gas supply on. Ensure the power cord connector that runs from the detector's rear panel to the power source is properly installed.

Tip: If you do not turn the gas supply on before you turn the detector power on, the detector will display an error message.

To power-on the detector, press the power button located on the front top-left corner of the detector.

At startup, the detector beeps three times, displays the message "Booting System... Please Wait," and runs a series of startup confidence tests. The initialization screens appear in the order shown in the following figure.

Figure 3–1: Detector startup screens

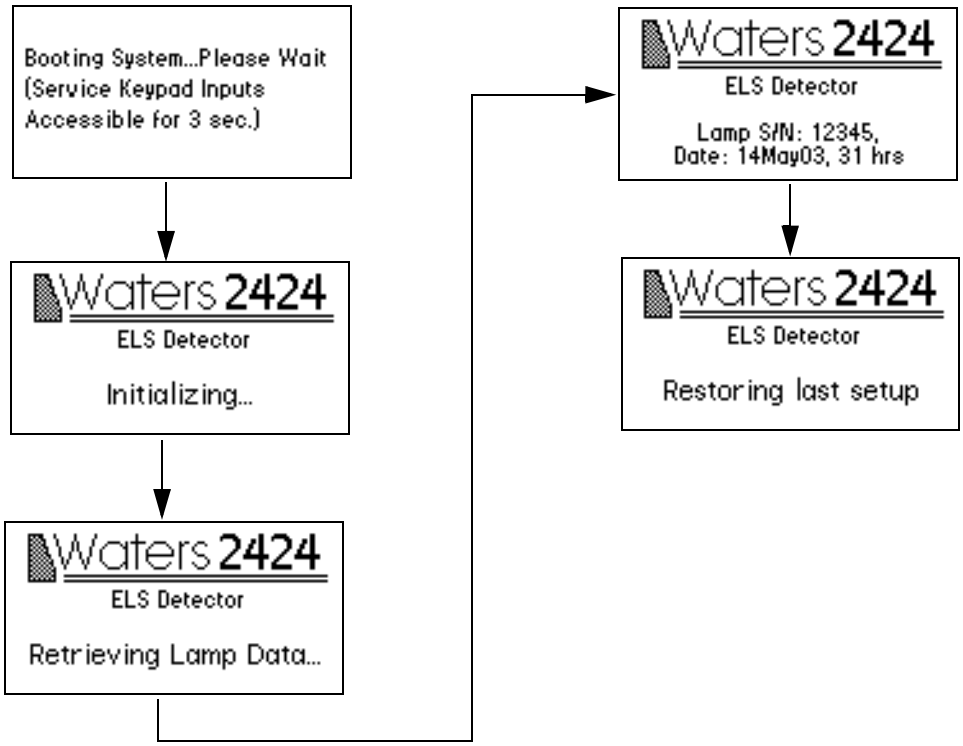

Tip: Service keypad inputs are coded for use only by Waters Service Engineers for troubleshooting.

When initialization is complete, the detector displays the Home screen (see page 54 and page 57).

Figure 3–2: Detector Home screen

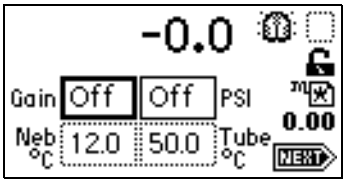

Tip: For normal use, allow the detector to warm up at least 60 minutes before operating.

3.1.1.1 If confidence tests fail

If one or more of the confidence tests fail during initial startup, the detector behaves as follows:

- Beeps
- Displays an error message
- For serious errors, displays the word "Error" in brackets (<Error>) in place of the runtime light scattering units on the Home screen.

See "Startup error messages" on page 97, for a list of startup confidence tests failures, error messages, and recommended recovery actions. Error messages that can appear as you operate the detector and suggested corrective actions are described in the online Help. See page 106 for hardware-related causes of confidence tests failure during startup and their corrective actions.

3.1.2 Using the display

The detector employs a 128 × 64 bitmap graphic display and a 24-key membrane keypad for the operator interface. After the startup confidence tests have run successfully, the detector displays the Home screen.

Figure 3–3: Detector Home screen

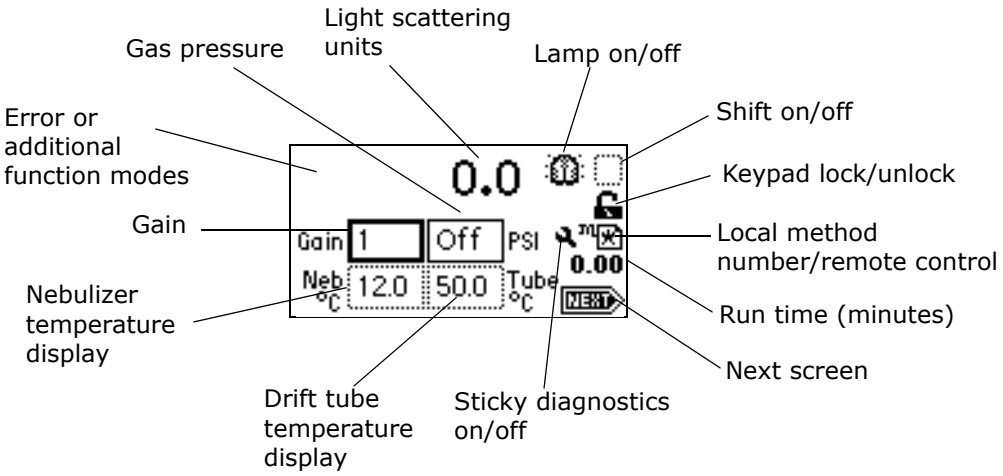

You can recall the Home screen at any time by pressing HOME. At the first use of the detector, the Home screen shows the default settings for the gain and pressure.

The detector monitors performance in units of light scattering in real time, allowing you to modify all the parameters discussed in the table in the next section.

3.1.3 Detector Home and Message screen icons

The detector Home and Message screens display the icons or fields shown in the previous figure. For a list of the ranges and defaults for these icons and fields, see the following table.

Table 3–1: Detector Home and Message screen icons

Icon or field	Icon/field name	Function
10 gain	Gain	Selects the gain setting. Regular field.
PSI	Gas pressure	Displays the current gas pressure and allows you to enter a new gas pressure value.
Neb °C	Nebulizer temperature	Displays the current gas pressure and allows you to enter a new gas pressure value.
Tube °C	Drift tube temperature	Displays the current temperature of the drift tube.
0.0	LS units	Displays the current light scattering units.
	Lamp on	Indicates the lamp is on.
	Lamp off	Indicates the lamp is off.
	Shift off	Blank = Shift off.
	Shift on	Indicates shift is on for one key press.
	Keypad unlock	Indicates unrestricted keypad entry.
	Keypad lock	Indicates parameter changes are not allowed; instrument is running a method.
	Sticky diagnostic on	Indicates a sticky diagnostic is active (see page 99).

Table 3–1: Detector Home and Message screen icons (Continued)

Icon or field	Icon/field name	Function
	Local method number	Indicates that the detector is not controlled by a data system. It displays either a cursive "m" and the current method number or an asterisk (*), which indicates current conditions are not stored as a method.
	Remote control	Indicates that the detector is controlled by a data system, and displays a remote control icon.
0.00	Run time	Displays how many minutes elapsed since you pressed Run or since an inject start signal was received.
NEXT	Next	Indicates that pressing Next brings you to additional screens.
	Message screen icon	Indicates an error message.
	Message screen icon	Indicates an error message.
	Message screen icon	Indicates a question.

3.2 Using the keypad

The detector's 24 keys carry out these functions:

- Full numeric entry – 10 digits plus a decimal point.
- Global functions – Enter, Shift, CE (Clear Entry), Next, and ? (Help).
- Navigation – ▲ and ▼ (used for navigation only; pressing ▲ may also move you to the left, ▼ to the right).
- Direct access to specific screens – HOME, TEMP ×C, METHOD, CONFIG (Configure), DIAG (Diagnostics), and TRACE.
- Primary function keys – Chart Mark, Auto Zero, Run/Stop, and Next. Primary function keys take effect immediately, with no further entry required.

- Secondary function keys – Reset, Lamp, Lock, System Information, Contrast, Previous, Cancel, +/–, and Clear Field. You must enter information into parameter fields and then press Enter.

Figure 3–4: Detector keypad

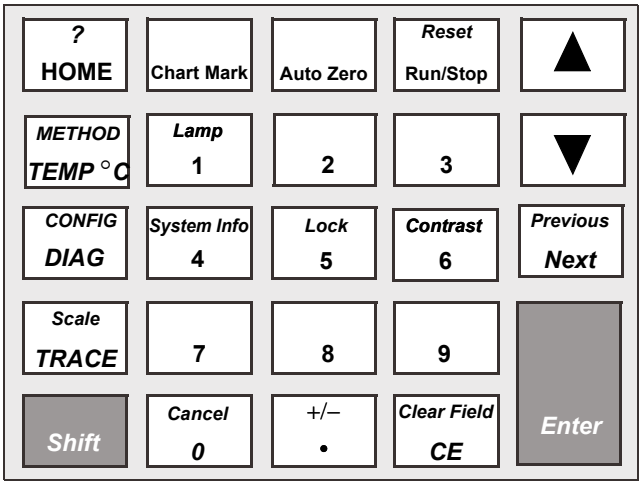

Keys labeled in an all-capital-letter style (HOME, METHOD, TEMP °C, CONFIG, DIAG, and TRACE) take you directly to a function from most screens.

Select a numeric entry on a choice list or menu as follows:

- For numeric entries from 1 to 9 (inclusive) on choice lists or menus, specify the number corresponding to the desired item, then press Enter.
- For the number 10, select 0, and then press Enter.
- To go to the end of a choice list, press ●.
- For entries numbered 11 or 12, press the ▲ or ▼ key to scroll to the desired item on the choice list, and then press Enter.

Tip: The ▲ and ▼ keys do not increase or decrease the values in numeric fields. To change field entries, use the numeric keypad.

The following table explains the functions of the primary and secondary keys on the detector keypad:

Table 3–2: Keypad description

Key	Description	
	Unshifted	**Shifted**
? HOME	HOME – Displays the Home screen containing icons and the gas pressure, Gain, Nebulizer, Drift Tube, and Light Scattering fields.	? – Displays context-sensitive Help when available.

Table 3–2: Keypad description (Continued)

Key	Description	
	Unshifted	**Shifted**
Chart Mark	Chart Mark – Causes a momentary pulse to the analog output and digital data.	N/A
Auto Zero	Auto Zero – Sets the light scattering offset so that the signal light scattering output reads 0 LSU.	N/A
Reset Run/Stop	Run/Stop – Starts or stops (pauses) the run clock. The elapsed time appears near the lower, right-hand corner of the Home screen.	Reset – Resets the detector run clock to zero minutes and returns the detector to initial conditions for the current method.
▲ ▼	▲ and ▼ – Displays the active field, displaying a heavy border on screens with entry fields (edit, check box, or choice list). The arrow keys make a different field active. (▲ moves up or leftward; ▼ moves down or rightward.) On screens with a scrollable list, these keys move the highlight upward (toward the beginning of the list) or downward (toward the end). Other screens can have special instructions for using the ▲ and ▼ keys (for example, the Display Contrast screen).	
Previous Next	Next – Displays a screen with additional options related to the current screen. Repeated pressing of this key returns you to where you started. On most screens where this key is active, the NEXT arrow appears in the lower, right-hand corner of the display.	Previous – Navigates through the screens in reverse order when the Next key is available.
METHOD TEMP °C	TEMP °C – Displays the Temp °C screen, with which you set the nebulizer power factor for heating, turn cooling on, and specify the drift tube temperature.	METHOD – Displays the list of options for creating and clearing timed and threshold events and storing, retrieving, and resetting methods.
CONFIG DIAG	DIAG – Displays the list of diagnostic routines.	CONFIG – Displays the first Configuration screen.
Scale TRACE	TRACE – Displays the light scattering monitor trace for the channel.	Scale – Provides you with the means to modify the display range in the X (time) and Y (LSU) dimensions when the light scattering trace is visible.

Table 3–2: Keypad description (Continued)

Key	Description	
	Unshifted	**Shifted**
Shift	Shift – Enables the shifted functions (identified by the text at the top of most keys). The shifted state is temporary (for one keystroke only) and resets after the next keystroke.	
0 - 9	0-9 – Enters the corresponding number into a current field. Also positions the cursor at the corresponding entry in a list (0 = tenth item). Selects the corresponding number from a choice list.	0-9 – See descriptions for specific, shifted numeric keys.
Lamp 1	1 – See 0-9 above.	Lamp – Displays the lamp use statistics for a currently installed lamp, and provides the means to turn the lamp on or off. The current state of the lamp is indicated by an icon on the Home screen.
System Info 4	4 – See 0-9 above.	System Info – Displays system information including software version, checksum, and instrument serial number.
Lock 5	5 – See 0-9 above.	Lock – Enables or disables the keypad lock feature when you are on the Home screen. Use the lock to prevent inadvertent changes to detector settings. The current lock state is indicated by an icon on the Home screen.
Contrast 6	6 – See 0-9 above.	Contrast – Permits adjustment of contrast (viewing angle) of the liquid crystal display.
Cancel *0*	0 – See 0-9 above.	Cancel – Backs out of a prompt without completing the task. The word “Cancel” appears as a cue in the lower, right-hand border of the message.
+/– •	• – Enters a decimal point. Also positions the cursor at the last entry in a list.	+/– – Enters a positive/negative sign. Use this function to invert the sign of the number in the active field.

Table 3–2: Keypad description (Continued)

Key	Description	
	Unshifted	**Shifted**
Clear Field *CE*	CE – Clears an editing change and returns the contents of a field to its previous value. Sets the value to a unique word for some fields. For example, in the voltage offset diagnostic, you may either enter a numeric offset value or press CE to change it to Off.	Clear Field – Blanks the current entry field before you enter the desired values.
Enter	Enter – Completes the entry in an edit field. Also advances the active field as if ▼ had been pressed (except after you edit the wavelength on the Home screen). Press Enter to acknowledge error messages and other prompts; the word "Enter" appears as a cue in the lower, right-hand border of the message.	

Tip: The detector does not have a polarity setting because the detector signal measures and outputs either concentration/mass or temperature, which are always positive numeric values.

3.3 Navigating the user interface

When operating the detector,

- press Enter, or ▲ and ▼, to navigate among editable fields. A heavy border appears around the active field after you complete an entry;
- press Enter to advance to the next active field;
- if you make an error, press CE (Clear Entry) to undo any changes and return to the active entry field;
- an active field containing a choice list has a number to the right of the field within the thick border. To display a choice list, press Enter, and then take one of these actions:
  - Press the corresponding number key to select an item immediately.
  - Use ▲ and ▼ to scroll through the list, and then press Enter.

Tips:

- If you know the number corresponding to the desired choice, you can press that number without pressing Enter first.
- The ▲ and ▼ keys do not increase or decrease numeric fields. To change field entries, use the numeric keypad.

3.3.1 Navigating to and from the Home screen

From most screens, you can press HOME to display the Home screen. From the Home screen, you can access the following secondary functions by pressing Next:

- Data rate and filter time constant
- Enable/disable auxiliary switch output
- LSU offset (data offset)
- Maximum voltage output
- Voltage offset
- Enable/disable and select the auto zero function

Tip: The parameters you enter into the secondary function fields become part of the current method conditions and are stored when you store the method.

See also: "Programming methods and events" on page 74.

When you press Next, the detector displays four additional Home screens, labeled 2 of 5, 3 of 5, 4 of 5, and 5 of 5.

Figure 3–5: Secondary functions of the Home screen

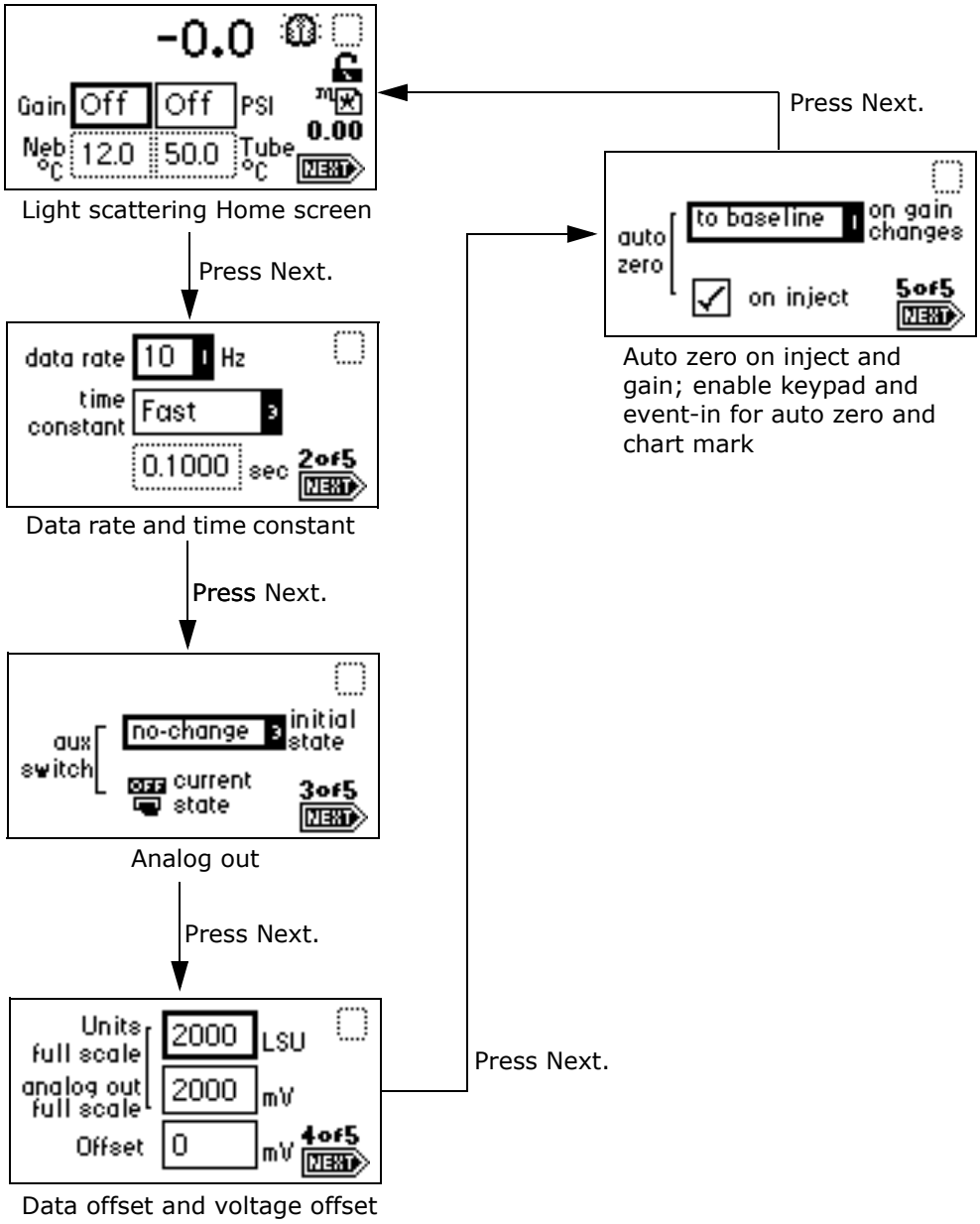

3.4 Preparing to start a run

You must set up the detector before you can start a run to make light scattering measurements with a detector. To start a run, you can press Run/Stop or trigger the detector by means of the inject start terminals on the rear panel. When you start a run, the detector performs an auto zero function (if enabled).

Tip: The auto zero on inject function must be enabled (default) for the detector to perform an auto zero.

3.4.1 Primary and secondary functions

Access the primary and secondary functions via the Home screen or by pressing Next.

Note: Changing the sensitivity (LSU-FS) setting affects only the 2-V output. The digital output at the Ethernet connector remains unchanged.

Gain – Controls the full-scale sensitivity of the detector by defining the gain factor from 1 to 1000. Each gain setting has a linear relationship with the actual light scattering signal.

Gas pressure – Gas pressure is controlled at the nebulizer by a pressure regulator. This function monitors the condition of gas flow through the nebulizer. For the high-flow and low-flow nebulizers, the maximum gas pressure is 410 kPa (4.1 bar, 60 psi).

Filter time constant – Allows you to adjust the noise filter (time constant) to achieve the optimum signal-to-noise ratio.

Table 3–3: Primary and secondary function (method) parameters

Function	Units	Range	Default
Data rate	Hz	10, 20, 40, or 80 Hz	10 Hz
Gain		0 to 1000	0
Filter time constant	sec	0 to 5.0 sec	1.0 sec
Sample full-scale	LSU	0.1 to 2000.0 LSU	2000 LSU
Sample offset	mVdc	±2000 mVdc	0 mVdc
Lamp state		On, off	On
Gas pressure	PSI	Off, 140 to 400 kPa (1.4 to 4.0 bar, 20 to 60 psi)	Off
LSU-FS	LSU-FS	10 to 2000	2000 LSU
Analog out	mV	10 to 2000	2000 mV
Auto zero on inject		YES, NO	YES
Auto zero on gain change		Disable, Zero, Maintain Baseline	Maintain Baseline
Nebulizer heater level	% Heating, Cool, Off	Heater level, 0 to 100 or Cool	Cool
Drift tube heater set-temp	°C	Off, 5 to 100 °C	Off
Drift tube heater alarm band	°C	±5 to 25 °C	±20 °C
Column heater set-temp	°C	Off, 5 to 150 °C	Off
Column heater alarm band	°C	±5 to 25 °C	±20 °C

Table 3–3: Primary and secondary function (method) parameters

Function	Units	Range	Default
Temperature source		Drift Tube, Nebulizer, Column	Nebulizer
Temp output offset	mV	±2000 mV	0 mV
Threshold level		Off, 0 to 2000	Off
Threshold switch mode		On, Off, Pulse, Rectangular Wave	On
PULSE switch mode period	sec	0.1 to 60.0 sec	0.1 sec
RECT WAVE switch mode period	sec	0.1 to 60.0 sec	0.2 sec
Number of timed events		0 to 50	0

3.5 Setting up a run

Start a run by pressing the Run/Stop key. Before starting a run, you must set the detector operating parameters before data can be acquired.

To set up a run:

1. Press HOME to return to the Home screen.
2. Set the drift tube heater temperature (see page 61).
3. Set the gain and gas pressure (see page 63).
4. Equilibrate the detector for about an hour.
5. Make sure the stop flow output switch is reset (see page 64).

You need to program several other parameters, depending on the functions you want to perform during a run. See page 60 for function descriptions, fields, screen number, type of function, display units, allowable ranges, and default settings for the Home screen and the secondary function screens. You can view the properties of common chromatographic solvents in the table on page 119.

3.5.1 Setting the nebulizer and drift tube temperature

The nebulizer cooler cools the nebulizer tube wall, providing a cold surface for mobile phase eluent droplets to condense and flow to waste. This reduces the amount of solvent that is sprayed into the drift tube in the vaporization process and allows the drift tube temperature to run lower, therefore increasing the sensitivity of semi-volatile samples.

The nebulizer heater, which is regulated by a heater power level setting, is located in the same oven as the drift tube heater. The nebulizer heater allows preheating of the

sample solution to the set heater power level via a resistive heat wrap that surrounds the nebulizer tube.

From the Nebulizer and Drift Tube Temperature Control Home screen, you control the nebulizer heater, nebulizer cooler, and drift tube heater temperature independently.

Tips:

- The drift tube temperature must be sufficiently high to remove all solvent; otherwise, detector noise occurs.
- Too high a drift tube temperature can vaporize the sample and cause loss of sensitivity.
- The nebulizer temperature must be at least 5 °C below the drift tube temperature.

To set the nebulizer and drift tube temperature:

1. Press Temp °C.

   Result: The Nebulizer Heater/Cooler and Drift Tube Heater Temperature Control Home screen appears.

   Figure 3–6: Nebulizer and Drift Tube Temperature Control Home screen

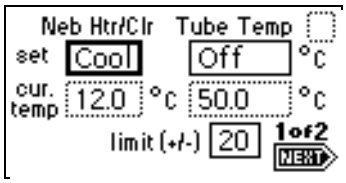

2. To toggle between Heating%, Cool, and Off, press CE when the “set” field is active:

   a. If you selected Heating%, you must specify the nebulizer heater power level setting in the set field. You can now view any nebulizer temperature changes in the “cur. temp” field.

   b. If you selected Cool, thereby turning on the nebulizer cooler, you cannot enter any values in the “set” field. However, you can view any nebulizer temperature changes in the “cur. temp” field.

      Tip: The Cool setting is the default.

   c. If you selected Off, both the nebulizer heater and cooler are turned off.

3. Specify the drift tube heater temperature in the “set” field.

Warning: The flash point is the lowest temperature at which a flame can propagate through the vapor of a combustible material to its liquid surface. A chemical's flash point is determined by the vapor pressure of the liquid. Only when a sufficiently high concentration is reached, can a solvent vapor support combustion (see page 119 for the flash points of common solvents).

3.5.2 Setting the gain and gas pressure

The gain setting controls the full-scale sensitivity of the detector by defining the gain factor from 1 to 1000. Each gain setting relates linearly with the actual light-scattering signal. The gas pressure setting monitors the condition of gas flow through the nebulizer. For the high-flow and low-flow nebulizers, the maximum gas pressure is 410 kPa (4.1 bar, 60 psi).

Notice: To avoid flooding the nebulizer and detector, allow the nebulizer gas to continue flowing, at full or reduced rate, when the mobile phase pump is shut down or the solvent flow is set to zero.

Tips:

- Gas pressure should be high enough to prevent extended exposure time of the sample in the drift tube area. Gas pressure that is too low could cause higher-than-desired dispersion of particles and, consequently, loss of sensitivity.
- Gas pressure should be high enough to prevent the formation of large particles that could cause detector noise.

To set the gain and gas pressure:

1. Press Home.

   Result: The Gain and Gas Pressure Home screen appears.

   Figure 3–7: Gain and Gas Pressure Home screen

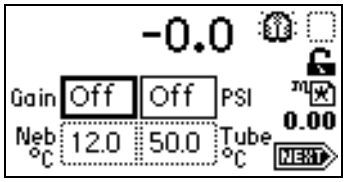

2. Enter the gain amount in the Gain field to activate the photomultiplier tube (PMT).
3. To turn off the PMT, enter 0 in the Gain field.
4. Specify a gas pressure of at least 450 kPa (4.5 bar, 65 psi) in the PSI field to activate the gas valve.

   Recommendation: When operating the instrument with an unlimited gas source, such as a nitrogen generator, use a low gas flow when the instrument is idle.

5. To shut off the gas valve, enter 0 in the PSI field.

> **Notice:** To prevent the detector from flooding, ensure that no liquid is flowing into it when you specify a gas value of 0.

3.5.3 Setting the column heater module temperature

In the Column Heater Temperature Control Home screen, you control the temperature of the column heater module (see page 48).

To set the column heater module temperature:

1. Press Temp °C, Next.

   Result: The Column Heater Temperature Control Home screen appears.

   Figure 3–8: Column Heater Temperature Control Home screen

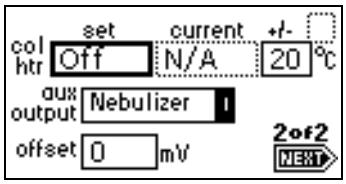

2. Specify the column heater temperature in the "set" field.

   Result: You can now view any changes in the current field.

3.5.4 Resetting the stop flow output switch

> **Warning:** Fire and explosion hazard. Failure to connect the stop flow output could cause the detector to flood.

A dedicated "stop flow" switch becomes active when a heater, gas flow, or lamp failure occurs. Once the cause of the error is corrected, the stop flow output switch can be reset by reactivating the faulty detector function or pressing DIAG 1, Reset Flow & Diags.

Requirement: To automatically stop the chromatographic flow to the system in the event of an error condition or hardware failure, the Stop Flow signal must be connected to the chromatographic pump.

3.5.5 Operating the trace and scale functions

The trace function allows you to display an LSU signal for the last *n* minutes (up to 60) of detector operation.

- Press TRACE to display the LSU signal acquired over the last 30 minutes by default. The LSU signal updates once every 20 seconds.
- Press Scale (press Shift, TRACE) to display the scaled trace with T1 (ending time) displayed (-30 for the last 30 minutes) by default.

Change the ending time parameter to any number from 3 to 60. You can use the Scale function to zoom in on a particular section of the trace.

To display the Scale parameters:

1. Press Scale.
2. Press Next to display T2 (starting time).
3. Press Next again to display LSU1 (starting or low light-scattering signal).
4. Press Next again to display LSU2 (ending or high light-scattering signal).

By entering appropriate times and light scattering numbers in the four scaling parameter boxes, you can zoom in on one section of the current light scattering trace.

- For LSU1 and LSU2, press CE to reset to auto-scaled.
- T1 represents the left-hand side of the trace, or ending time, to be displayed. The default is -30.
- T2 represents the right-hand side of the trace, or starting time. The default is 0.

The following screen shows a 30-minute trace of simulated peaks.

Figure 3–9: 30-minute scaled trace of continuous, simulated peaks, with T1 changed to -30

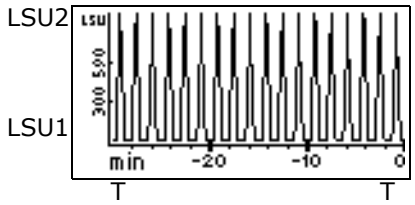

The following screen shows a 5-minute, scaled trace (or zoom) of the 30 screen shown above. T1 is changed to -5. T2 is changed to 0. LSU1, and LSU2 remain as auto-scaled.

Figure 3–10: Scaled trace for 5 minutes changing T1 to -5

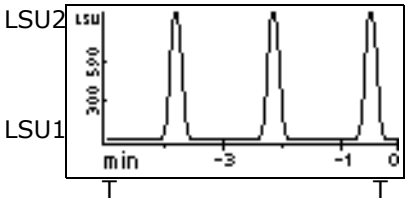

The following screen shows a 30-minute, scaled trace similar to that shown in the first screen, with the starting light scattering or LSU1 changed from auto-scaled to -10. T1 remains at -30, T2 at 0.

Figure 3–11: Scaled trace for 30 minutes changing LSU1 to -10

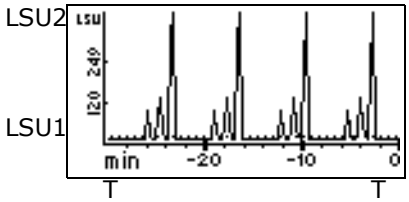

The following screens show a 60-minute trace on Channel A scaled to the last 15 minutes of data. T1 is changed to -15.

Figure 3–12: Scaled trace changing T1 to -15

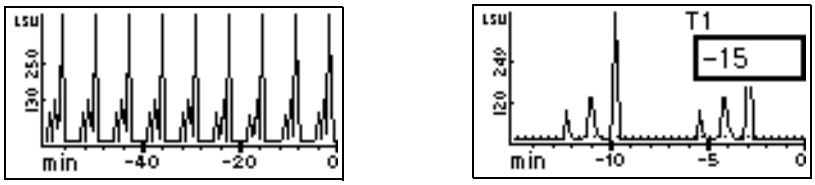

As you modify the output using the scale function, the trace function continues to display the detector output in real time on either or both channels.

3.5.6 Setting the data rate

This function allows you to set the data rate to 10, 20, 40, or 80 Hz.

To set the data rate:

1. From the Home screen, press Next.

   Result: The data rate and time constant function screen appears.

   Figure 3–13: Data rate and time constant function screen

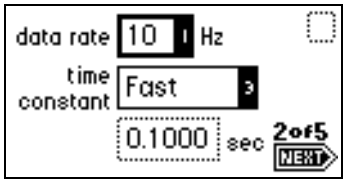

2. Use Enter and the numeric keypad, or ▲ and ▼, to select the appropriate data rate.

3.5.7 Setting the filter time constant

This function allows you to adjust the baseline noise filter (time constant) to achieve the optimum signal-to-noise ratio. The detector uses a Hamming filter to process the sample's signal. The filter time constant can be adjusted from 0 to 5.0 seconds in 0.1 increments. When the time constant value is set to zero, the Hamming filter is disabled.

3.5.8 Setting the switch output

The detector has a general purpose switch output that can be controlled manually, by run time, or by sample level. The third Home screen displays the current setting of the method and the switch output. Changing the initial value, On or Off, also changes the current state of the switch output.

For information on programming the switch output by time or by level, see page 76.

3.5.9 Setting the analog signal output

The fourth Home screen contains the sample signal analog output parameters, the units full-scale value, the analog output full-scale value, and its offset. These settings only affect the sample signal's analog output, not the digital data processed by the data system using the Ethernet communications data link.

The units full-scale value defines the maximum signal value that can be represented using the analog output. Likewise, the analog output full-scale value defines the maximum output voltage value that will be used to represent the units full-scale value. For example, using the default values, the units full-scale value of 2000 is represented as a 2000-mV output on the analog outputs. Reducing the units full-scale value to 1000 means that the 2000-mV analog output will represent a 1000-LSU signal. This also increases the analog output sensitivity from 1 LSU/mV to 0.5 LSU/mV.

Changing the analog output full-scale value reduces the sensitivity of the analog output. For example, changing the analog output full-scale value to 1000 mV reduces the analog output sensitivity from 1 LSU/mV to 2 LSU/mV. The analog output sensitivity can be improved by also reducing the units full-scale value to 1000 LSU, to obtain a 1 LSU/mV sensitivity.

The offset data field provides a way to raise the analog output signal to meet the detection signal requirements of some data loggers.

3.5.10 Setting auto zero options

The fifth Home screen contains options for setting various auto zero options, either when the gain is changed or at the start of a run (on inject).

When the gain amount is modified from the front panel, a downloaded method, or a timed event, the following can occur:

- The auto zero adjustment can be recalculated based on the detector's baseline signal, or no signal (zero).
- The auto zero adjustment can be reset to zero.

Based on the setting of the On Inject check box at the start of a run, the detector either evaluates the auto zero adjustment based on no signal (zero), or it resets the auto zero adjustment to zero.

3.6 Configuring the detector

Press CONFIGURE (press Shift, DIAG). The first of four Configuration screens appears.

Tip: Other functions, such as specifying event inputs and enabling pulse periods, are also available in the Configuration screens.

Figure 3–14: Configuration screens

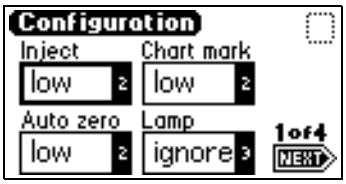

Configuration screen 1 of 4

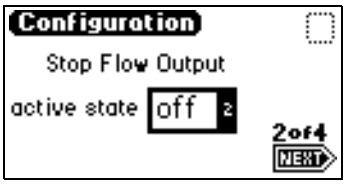

Configuration screen 2 of 4

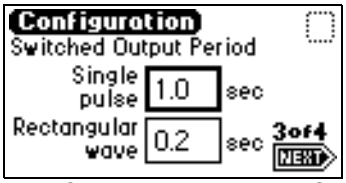

Configuration screen 3 of 4

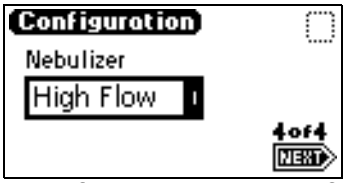

Configuration screen 4 of 4

3.6.1 Configuring event inputs

You can also use CONFIGURE to edit event input settings and specify switched output settings.

Four editable entry fields appear on the first Configuration screen: Inject, Chart mark, Auto zero, and Lamp.

- Inject – You can specify the Inject input to signal the start of a run. This event resets the runtime clock and applies initial method conditions immediately:
  - High – Start run when contact closure changes from Off (open) to On (closed).
  - Low – Start run when contact closure changes from on (closed) to off (open).
  - Ignore – Do not respond to inject-start input.

  Use Enter and the numeric keypad or, ▲ and ▼, to select the appropriate entry.
- Chart mark – You can specify the input to create a chart mark on signal output. To determine the response of the channel, use the chart mark function.
  - High – Create chart marks when contact closure changes from Off (open) to On (closed).
  - Low – Create chart marks when contact closure changes from On (closed) to Off (open).
  - Ignore – Do not respond to chart mark input.

  Use Enter and the numeric keypad or, ▲ and ▼, to select the appropriate entry.

- Auto zero – You can configure the auto-zero input to auto zero light scattering readings on signal output. To determine the response of the channel, use the auto zero function.
  - High – Auto zero the channel when contact closure changes from Off (open) to On (closed).
  - Low – Auto zero the channel when contact closure changes from On (closed) to Off (open).
  - Ignore – Do not respond to auto-zero input.

  Use Enter and the numeric keypad or, ▲ and ▼, to select the appropriate entry.
- Lamp – You can configure the lamp input level to ignite or extinguish the tungsten lamp on or off from an external device.
  - High – Ignite the lamp on when contact closure is On (closed).
  - Low – Ignite the lamp on when contact closure is Off (open).
  - Ignore – Do not respond to lamp input.

  Use Enter and the numeric keypad or, ▲ and ▼, to select the appropriate entry.

The default for Inject, Chart mark, and Auto zero is low; the default for the Lamp parameter is Ignore.

Tip: Controlling the lamp state by the event input overrides keypad control.

3.6.2 Configuring stop flow output

Warning: Fire and explosion hazard. Failure to connect the stop flow output could cause the detector to flood.

The stop flow output is an output switch. Its default active state is On, which can be changed to Off on the second configuration screen.

When the active state is Off, the stop flow output is normally On, until a stop flow error condition occurs. At that point, the stop flow output is changed to the Off state.

Requirement: To automatically stop the chromatographic flow to the system in the event of an error condition or hardware failure, the Stop Flow signal must be connected to the chromatographic pump.

3.6.3 Setting pulse periods

You use the third configuration screen to set pulse width or to activate a rectangular wave on the switch.

- Single pulse (in seconds) – If the switch is programmed to generate a pulse as a timed or threshold event, then the period of the signal (single pulse width) is as specified in this field (range is 0.1 to 60 seconds).
- Rectangular wave (in seconds) – If the switch is programmed to initiate a rectangular wave as a timed or threshold event, then the period of the signal (the width of one pulse period in a rectangular wave or pulse train) is as specified in this field (range is 0.1 to 60 seconds).

The following figure shows the difference between a single pulse and a rectangular wave.

Figure 3–15: Setting the pulse period or signal width on the switch

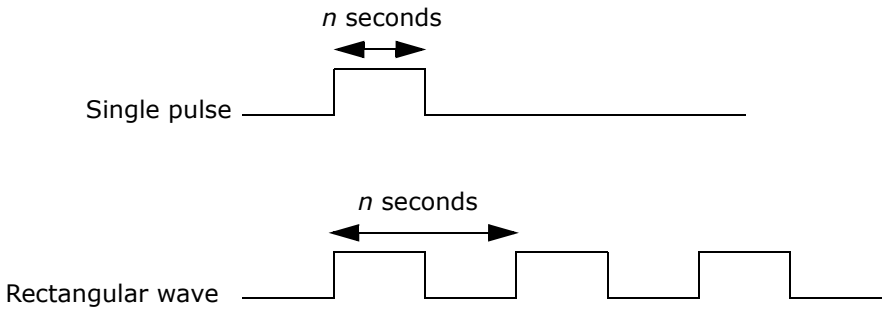

3.6.4 Selecting the type of nebulizer

You use the fourth configuration screen to select the appropriate nebulizer for your flow rate range:

- High flow – 0.3 to 3 mL/minute
- Low flow – 0.05 to 0.5 mL/minute

3.6.5 Setting the display contrast

Adjust the contrast of a displayed screen using the Display Contrast function. When you press Contrast (press Shift, 6), the Display Contrast screen appears.

Figure 3–16: Display Contrast screen

Press ▲ and ▼ to adjust the contrast of the display, and then press Enter.

3.6.6 Displaying system information

Press System Info (press Shift, 4) to display information about the detector, including the serial number, the software version number with checksum, and the version date, if applicable.

Press Enter to return to the Home screen.

Figure 3–17: Example of a system information screen

Tip: See the detector's release notes for the actual checksum and version.

3.6.7 Using help

The detector offers limited context-sensitive Help. When you press ? (press Shift, HOME) from a point in the program with which a Help screen is associated, the screen appears. If Help is unavailable for the function you are working on, you do not receive a response.

Figure 3–18: Example of a Help screen

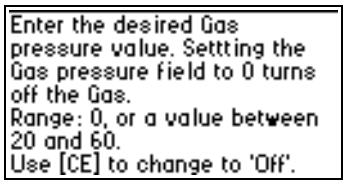

Press Enter to return to the previous screen.

3.7 Operating the detector

Tip: If you are operating the detector under the control of an external data system, you can program any parameters not controlled by the external data system at the front panel of the detector, before the external system takes control.

3.7.1 Standalone operation

When using the detector as a standalone instrument, you can store as many as 10 methods containing up to 50 timed events each. An asterisk in the method number field on the detector Home screen indicates current conditions, not a stored method. See page 74 for information on how to store a method.

3.7.2 Auto-optimize gain and LSU-FS

You must select a gain setting for the photomultiplier tube before a chromatographic injection. The proper setting maximizes the signal on the internal analog-to-digital converter without exceeding the signal's maximum potential limit. If the gain is too high, the signal can overload the signal collection electronics. If the gain is too low, sensitivity is reduced, and the signal-to-noise ratios are degraded.

Using the Auto Gain diagnostic, you run a single, trial chromatogram, after which the detector suggests ideal gain values. If you run timed-event gain changes, the detector adjusts the values to determine the ideal gain setting for each critical timed-event region. At the end of the run, a report of the ideal gain values appears on screen. The report is based on a computation that maximizes use of one-half the range of the electronics, so a 2× margin accommodates any variations in signal intensity. Based on this report, you adjust the gain values in the method, including its timed event table, to optimize the performance of the method.

Besides the ideal gain settings, the detector also monitors the maximum signal level throughout the entire run. It recommends a minimum LSU-FS value, which applies to the entire chromatogram and is displayed when you use the analog outputs during data collection. This value is also computed assuming a 2× margin for error.

3.7.2.1 Method optimization

Before using the Auto-Optimize diagnostic, a chromatogram of the sample should be run to establish the approximate retention time of the peaks of interest. A timed event table should be constructed, consisting of gain-change timed events at times corresponding to sections of baseline between the peaks. For example, if the RT of peak 1 is 0.9 minutes, and the RT of peak 2 is 1.75 minutes, a gain change timed event should be entered at 1.5 minutes. The goal is to provide retention time demarcation points at which a gain change could be tolerated without disrupting the integration of peaks in the chromatogram. The minimum requirement for the Auto Gain diagnostic to function is for you to set the initial conditions. No timed events are necessary. This means, however, that the detector recommends only one gain value setting for all of the peaks in the chromatogram, with no segregated peak region optimization.

Figure 3–19: Gain optimized chromatograph

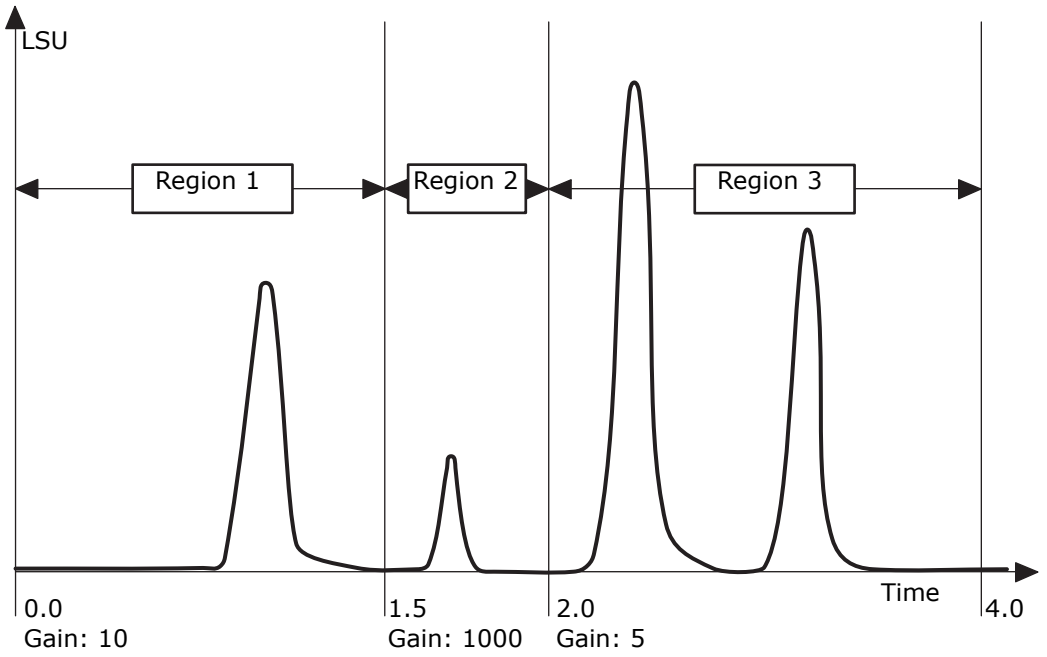

3.7.2.2 Recommended method development approach

You should use a method with two timed event changes to optimize a chromatogram. The first gain setting change could occur at 1.5 minutes, just before the small peak best detected at a gain of 1000. The next change would occur at 2.0 minutes. You need not to be concerned with the initial gain setting. The only requirement for the first timed event is that some gain setting takes place. An initial method table could resemble what is shown in the following table.

Table 3–4: Method development

Event time	Event
Initial (0.0)	Gain = 10
1.5	Gain = 100
2.0	Gain = 10

You can develop methods by entering the method information into the detector using the keypad or by retrieving a previously created method from a stored memory location.

If you are using Empower software, you must enter the method into the detector's Instrument Method Editor. Under Empower control, the method is downloaded to the detector when you make an injection or if the method is set up.

Once you program the method into the detector (or Empower editor), press DIAG, and then press 3 Enable Auto Gain. The Auto Gain enabled screen appears.

Figure 3–20: Select the Auto Gain diagnostic

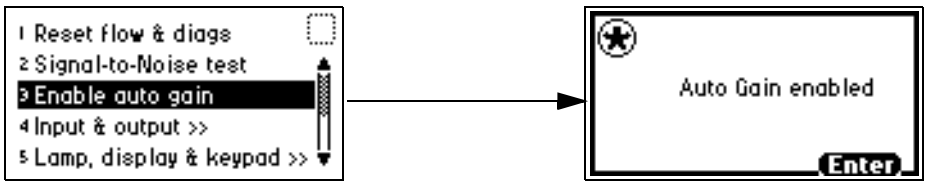

The diagnostic will run during the next injection. The sticky diagnostic (wrench) icon appears on the front panel, and <Auto Gain> appears in the emission field.

Figure 3–21: Auto Gain diagnostic screen

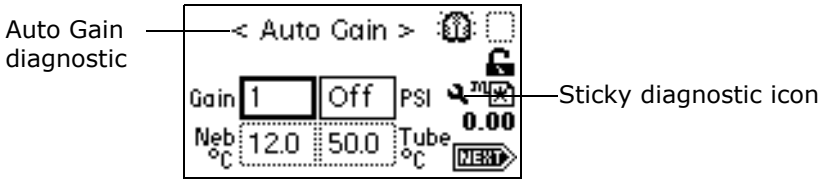

You can start the injection via a trigger from an injector input to the Inject Start event input on the rear panel. You can also press Run/Stop on the front panel while the sample is injected into the fluid stream.

Requirement: Synchronize the start trigger with the chromatography so that the timed events occur at the proper times relative to the peaks.

Select Make Injection if you are running under Empower control, or start the injection through other devices (such as the Alliance 2695 Separations Module).

When the run is completed, press Run/Stop, Reset. The detector displays a recommended LSU-FS value and a table of gain values.

Table 3–5: Gain values

Event time	Best gain
0	10
1.5	1000
2.0	5

3.8 Programming methods and events

3.8.1 Overview of methods

The detector allows the storage and retrieval of up to 10 methods. The detector refers to the stored methods as 1 through 10. If you are operating using a stored method, the method number appears on the Home screen. An asterisk in the method number icon indicates that the current conditions are not stored.

If you edit a parameter, you are editing the current conditions (Method *). You may store the method in one of the 10 available method storage slots, or you can replace the current method with one of the methods previously stored. When you retrieve a previously stored method, you replace the existing method conditions with those of the stored method.

The method number displayed on the Home screen is that of the retrieved method until you make a change. Any parameter change alters the current conditions so that the original recalled method is no longer in effect, causing the method number to change to an asterisk.

The operating parameters at the time of system shutdown are restored on startup. However, any timed events or thresholds associated with the method are deactivated when power is restored. On startup, you always see an asterisk inside the method icon on the Home screen.

When the detector is operating under remote control, the remote icon appears.

3.8.2 Programming timed events

You can program up to 50 timed events, to the nearest 0.01 minute. As you enter timed events, each new event appends to the end of the timed event list. You can enter a time that is not in sequence with the events entered previously, and the timed

event list is sorted when you press Next. The detector allows programming of the timed events listed in the following table.

Table 3–6: Timed event parameters

Number	Event	Range	Default
1.	Gain	0 to 1000	Off
4.	Chart mark		
5.	Auto zero		
6.	Lamp	On, Off	Off
7.	Auxiliary switch	On, Off, Pulse, Rect wave	Off
8.	Gas pressure	140 to 410 kPa (1.4 to 4.1 bar, 20 to 60 psi)	Off
9.	Threshold	0 to 2000 LSU	Off

To program a new timed event:

1. Press METHOD (press Shift, TEMP °C).

   Result: The Method choice list appears.

   Figure 3–22: Method choice list

2. Press 1 Timed events.

   Result: An active field for entering the time of the event appears.

3. Enter the time for the event.

   Result: When you begin entering the time, additional fields appear.

   Figure 3–23: Timed events screen

   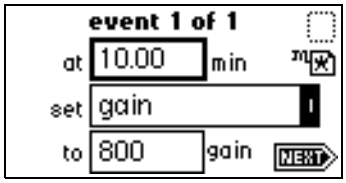

4. Press Enter to enter the time. To advance to the "set" field (Events choice list), press ▼.
5. Press Enter again to display the choice list, or, if you know the event number, press the number for the event you are programming.
6. Enter the appropriate selection in the "to" field, if the field appears.
7. Press Next to advance to a new timed event.

8. To delete a timed event, press CE when the time field is active to change it to Off.
9. Press HOME to return to the Home screen, and then press Run/Stop to start the method.
10. Press Reset (press Shift, Run/Stop) to reset the run clock to 0.

    If the detector is configured with the 700 Series Autosampler or another external device, the inject start signal programmed from that device starts the method.

    Tip: If you are working in real time under current conditions (method *), and a power failure or shutdown occurs, you lose all timed or threshold events if you did not store them as a method (see page 77).

3.8.3 Programming threshold events

You can program threshold events to control the auxiliary switch.

Below the specified threshold, the switch is set as shown in the table, below. You can program the switch parameters listed in the table.

Table 3–7: Threshold events "to" parameters

Number	Set to	Below threshold switch state
1.	On	Off
10.	Off	Off
11.	Pulse	Off
12.	Rect wave (rectangular wave)	Off

To define the pulse period, or the frequency of a wave, see page 68.

To program a threshold event:

1. Press METHOD (press Shift, TEMP °C) on the detector keypad.

   Result: The Method choice list appears.
2. Press 2 Threshold events. An active field (LSU) for entering the threshold appears. When you begin to enter a number in the LSU field, additional fields appear.

   Tip: The threshold selection provides the means to modify this initial Threshold value as a timed event.
3. Press Enter to advance to the "set" field, or press ▲ and ▼ to move among the three fields.

Figure 3–24: Threshold events screen

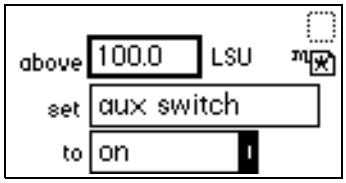

4. When the "set" field is active, press Enter to display the threshold events choice list, or press the number corresponding to the event you are programming.
5. When the "to" field is active, press Enter to display the switch state options, or press the number corresponding to the threshold parameter you are programming.

3.8.4 Storing a method

A method consists of all programmable parameters on the Home and associated screens, as well as timed and threshold events. You can store the current method by selecting a location from 1 to 10.

To store a method:

1. Press METHOD.

   Result: The Method choice list appears.

2. Press 4 Store method *.

   Result: A method number field appears.

   Tip: No warning message appears when the method number you select is already used by a previously stored method. When you enter a number and press Enter, the current method conditions are stored, overwriting any previous method stored in the same slot.

   Figure 3–25: Method number field

3. Enter a number from 1 to 10 (inclusive), and press Enter.

   Result: A brief message ("Storing * as method *n*") appears. When the display returns to the Method choice list, the method number you selected appears within the method icon. That method remains active until you retrieve another method or reset the detector to default conditions (Method *).

3.8.5 Retrieving a method

To retrieve a previously stored method:

1. Return to the Method choice list by pressing METHOD.

2. Press 3 Retrieve a method.

   Result: The last method number stored or retrieved appears in the method number slot box.

3. Specify the number of the method you wish to retrieve and press Enter.

   Result: A brief message ("Retrieving method *n*") appears. When the display returns to the Method choice list, the method number you specified appears within the method number icon.

3.8.6 Viewing events within a method

To view timed and threshold events that make up a stored method:

1. Enter the method number to retrieve the method.

   Result: the Method choice list appears with the method number displayed within the method number icon.

2. Press 1, to view the timed events, or 2, to view the threshold events of the method.

   Tip: If you change a timed or threshold event within a method, the asterisk appears (Method *) indicating that the method (*) is no longer the same as the stored method you retrieved in step 1. You can then store the method containing the altered event(s) in the same storage slot.

3.8.7 Resetting a method

Resetting a stored method is a two-step process. First, you reset the current conditions to the defaults; and then you save the defaults in one of the storage locations. The table on page 60 lists the parameter default settings.

To reset one or more methods:

1. Press METHOD.

   Result: The Method choice list appears.

2. Press 5 Reset method *.

   Result: A message screen appears.

   Figure 3–26: Reset method message

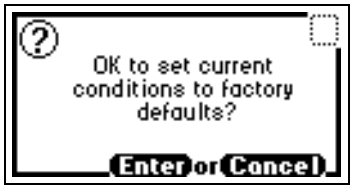

3. Press Enter, or press Cancel.

   If you press Enter,

   - all timed events are deleted;
   - all threshold events are disabled;

- all other operating parameters of the method (LSU-FS, etc.) are set to defaults.

If you press Cancel (press Shift, 0), the Method choice list appears.

Tip: To prevent losing the current conditions before you clear the method, store them in one of the available storage slots. When you clear the storage slots, you can restore the previous conditions.

4. Press 4 Store method, and enter a storage location number.
5. To clear other stored methods, repeat step 4.
6. Press HOME to return to the Home screen.

   Result: The method number icon displays an asterisk.

3.8.8 Clearing events

You may want to clear only timed and threshold events without resetting any other operating parameters.

To clear active events:

1. Return to the Method choice list by pressing METHOD.
2. Press 6 Clear events.

   Result: A message screen appears.

   Figure 3–27: Clear events message

3. Press Enter, or press Cancel.

   If you press Enter,

   - all timed and threshold events in the method are cleared;
   - all other operating parameters of the method (LSU-FS, etc.) are unaffected.

   If you press Cancel (press Shift, 0), the Method choice list appears.
4. Press HOME to return to the Home screen.

   Result: The method number icon displays an asterisk.

3.9 Conserving lamp life

To conserve the tungsten lamp, extinguish it while allowing the detector to remain powered-on. You can do this in three ways:

- Manually

- By programming a timed event
- By programming the lamp itself via the external contact closure

Tip: If you are operating the detector remotely, you can program the controller to extinguish the lamp without using the detector's front panel.

Recommendation: Regardless of whether you program the lamp to shut off or extinguish it manually, ensure that the "lamp off time" value is greater than 4 hours.

To manually extinguish and reignite the lamp, use the Lamp key. When the lamp is extinguished, the Home screen displays the words "Lamp off" and the lamp icon appears with an X through it.

Press the Lamp key (press Shift, 1) for these purposes:

- Extinguish the lamp or ignite it manually.
- Display the number of times the lamp has ignited.
- Display the hours and minutes the lamp has been ignited, during the current run and since installation.

To turn off the lamp manually from the detector front panel:

1. Press Lamp (press Shift, 1).

   Result: The lamp control screen displays this information:

   - The amount of time, in hours and minutes, the lamp has been ignited since the most recent startup.
   - The total time the lamp has been ignited since its installation.
   - The number of times the lamp has been ignited.

   Figure 3–28: Lamp control screen

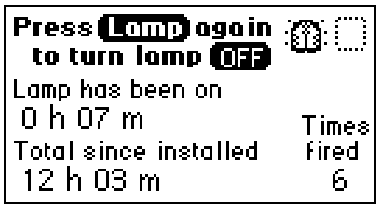

2. Press Lamp (press Shift, 1) again to extinguish the lamp.

   Result: The Home screen appears with an X through the lamp indicator icon and the words "Lamp off".

   Figure 3–29: Lamp off/on sequence

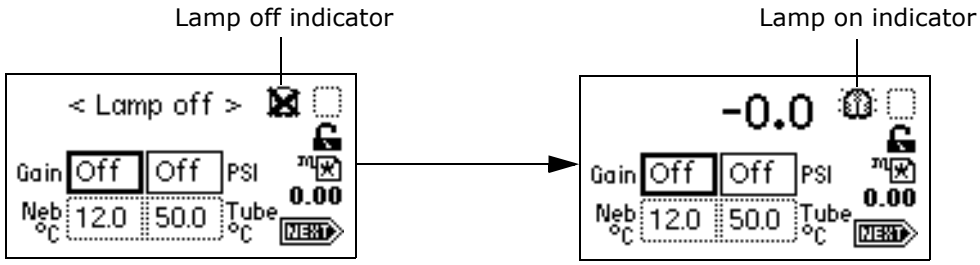

To ignite the lamp manually (when the lamp icon on the Home screen has an X):

1. Press Lamp (press Shift, 1).

   Result: The lamp control screen appears again with 0 hours and 00 minutes in the “Lamp has been on” field.

2. Press Lamp (press Shift, 1) again to turn the lamp on.

   Result: Once the lamp is ignited, the Home screen appears with the X removed from the lamp icon.

You can conserve lamp life by programming its automatic operation via a timed event method.

To program the lamp to turn on or turn off, select the Timed events option in the Method choice list, or program the lamp through one of the external contact closures.

- See page 60 and page 74 for more information on programming lamp operation using a timed event.
- See page 68 for more information on programming the lamp through the external contact closure.

3.10 Changing chromatographic conditions

Requirement: When the detector is plumbed to the chromatographic system, and the buffer type or pH of the mobile phase is changed, you must remove the previous buffered mobile phase from the fluid path.

! **Notice:** To avoid buffer precipitation and consequent clogging of the nebulizer, you must remove all traces of buffered mobile phase from the fluid path before changing to new conditions.

To change chromatographic conditions:

1. Set the drift tube temperature at the appropriate desolvation temperature setting.

   Tip: 50 °C (122 °F) is an appropriate desolvation temperature for most solvents.

2. To remove mobile phase from the fluid path of the detector, replace the buffered mobile phase with 100% HPLC-quality water, and flush the system for 10 minutes at 3 mL/min.
3. If the new mobile phase is miscible with water, replace the 100% HPLC-quality water with new mobile phase, and equilibrate the system for 10 minutes at 3 mL/min.
4. If the new mobile phase is not miscible with water, use an intermediate solvent first.

3.11 Shutting down the detector

Before you power-off the detector, you must remove any buffered mobile phase present in the fluid path.

Notice: To avoid damaging the column, remove all buffers from it before you shut down the detector.

To shut down the detector:

1. Remove all buffers from the column and detector.
2. Flow nonbuffered mobile phase through the system.
3. Turn off the pump.
4. Allow the nebulization gas to flow through the detector for a few minutes to drain the evaporation tube and detection chamber.
5. Stop the gas flow.
6. Power-off the detector.

   Tips:

   - The last set of selected parameters is retained in memory and becomes the default condition when the detector is powered-on again.
   - It is not harmful to leave the detector powered-on overnight when the instrument is not in use.
   - To increase the life of the lamp, extinguish it.
   - Do not allow solvent flow to continue if no gas flow is present. However, you may let the nebulizer gas flow at full or reduced rate even in the absence of solvent flow (that is, when the mobile phase pump is turned off or the flow rate is set to zero).

3.12 Periodic maintenance

To maintain the best performance from your detector, remove the mobile phase from the fluid path once each week.

To perform periodic maintenance:

Notice: To avoid damaging the column, remove it before you remove the mobile phase from the fluid path.

1. Set the drift tube temperature at the appropriate desolvation temperature setting.

   Tip: 50 °C (122 °F) is an appropriate desolvation temperature for most solvents.

2. Replace the buffered mobile phase with 100% HPLC-quality water, and flush the system for 10 minutes at 3 mL/min.

4 Maintaining the Detector

Keep to a maintenance schedule and perform maintenance as described in this chapter.

4.1 Contacting Waters technical support

If you are located in the USA or Canada, report malfunctions or other problems to Waters Technical Service (800-252-4752). Otherwise, phone the Waters corporate headquarters in Milford, Massachusetts (USA), or contact your local Waters subsidiary. The Waters' Web site includes phone numbers and e-mail addresses for Waters locations worldwide. Visit www.waters.com.

When you contact Waters, be prepared to provide this information:

- Detector serial number
- Problem symptom(s)
- Nebulizer and drift tube temperatures
- Heater set points and levels
- Flow rate
- Filter setting
- System operating pressure
- Gas pressure
- Solvent(s)
- System configuration (other components)

For complete information on reporting shipping damages and submitting claims, see the document *Waters Licenses, Warranties, and Support Services*.

4.2 Spare parts

Replace only parts mentioned in this document. For spare parts details, see the Waters Quality Parts Locator on the Waters Web site's Services & Support page.

4.3 Replacing the lamp cartridge

Recommendation: Because lamp alignment is critical to proper detector operation, it is recommended that only Waters pre-aligned lamp cartridges be used.

Required tools and materials

- #2 Phillips screwdriver
- Lamp cartridge

To replace the lamp cartridge:

1. Power-off the lamp.
   - To power-off the lamp manually, click a lamp button in the console, and then click Yes. The green LED on the console darkens as does the Lamp LED on the door.
   - To power-off the lamp using a timed event, see the instructions in the data application's online Help.
2. Power-off the detector, and disconnect the power cable from the rear panel.

   Alternative: To save time, leave the detector powered on for 15 minutes after you power-off the lamp. Doing so will allow the fan to blow cool air on the lamp, cooling it faster.

   Warning: The lamp and lamp housing can be hot. Wait 30 minutes (or 15 minutes with the fan running) after powering-off the detector for these components to cool before touching them.
3. Allow the lamp to cool for 30 minutes (or 15 minutes with the fan running), and then open the door.
4. Using a Phillips screwdriver, completely loosen the two captive screws and pull the assembly out slightly to relieve stress on the lamp connector wires.

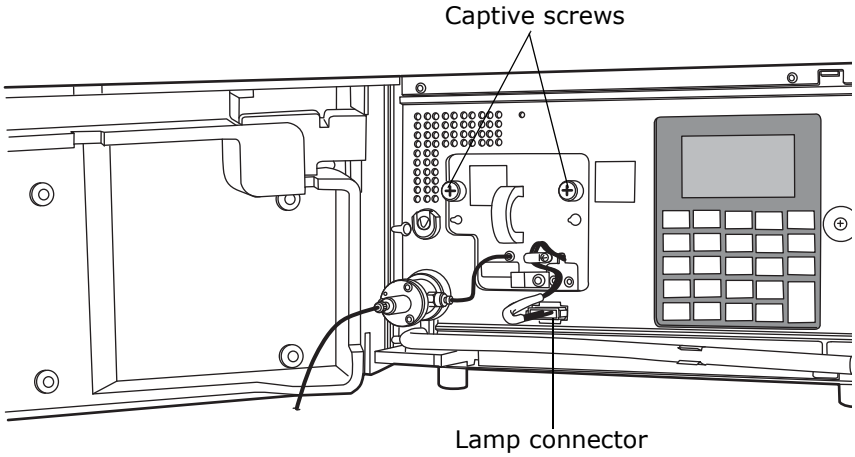

Warning: To avoid electric shock, power-off and unplug the detector before detaching the lamp power connector from the detector.

Notice: To avoid damaging the detector's electronics, power-off and unplug the detector before detaching the lamp power connector from the detector.

5. Disconnect the lamp connector from the front panel.

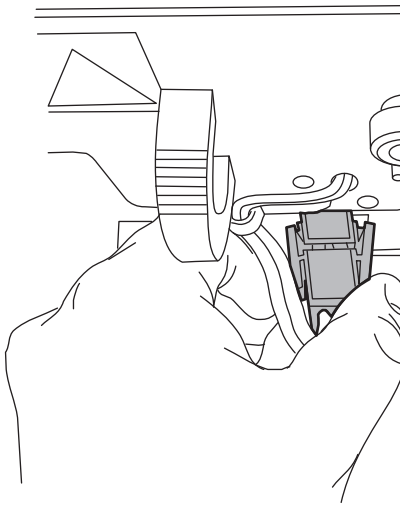

6. Remove the lamp cartridge assembly and replace it with a new one.
7. Reconnect the lamp connector.

Notice:

- Do not touch the new lamp with your bare fingers. Skin oils can greatly reduce the lifetime of the lamp. If fingerprints do get on the lamp, remove them with a lint-free tissue saturated with ethanol.
- To avoid misaligning the lamp, do not touch the bulb height adjustment lever.

8. Push the assembly back in, and tighten the two captive screws with a Phillips screwdriver.
9. Power-on the detector, and enter the new lamp information (see page 102).

4.4 Replacing the nebulizer

Required tools and material

- Nebulizer
- 5/16-inch wrench

To replace the nebulizer:

1. Stop the liquid flow.

2. Power-off the detector, and disconnect the power cable from the rear panel.

   Warning: To avoid burn injuries, do not touch the nebulizer until its temperature cools to less than 30 °C, as displayed on the detector home screen. If its temperature exceeds 30 °C, let the nebulizer cool in one of two ways before touching it:
   - Wait 30 minutes after powering-off the detector.
   - Wait 10 minutes after specifying Cool in the Nebulizer and Drift Tube Temperature Control Home screen (see page 62).

3. Open the door.

4. If a column or second detector is connected to the system, disconnect the solvent inlet tubing from the front of the nebulizer as follows:
   a. Use a 5/16-inch wrench to loosen the compression screw that holds the inlet tubing in place.
   b. Remove the solvent inlet tubing from nebulizer.

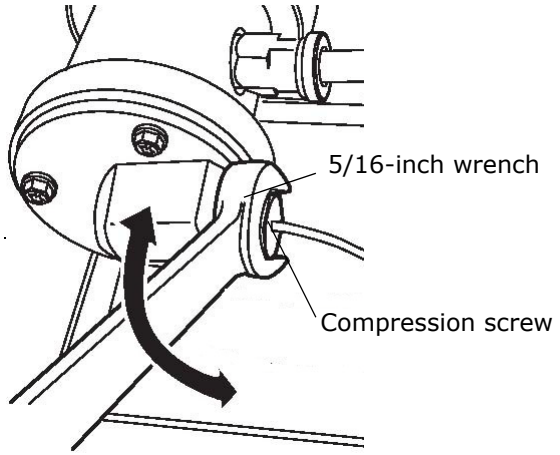

5. Push in the quick-disconnect tubing fitting on the right-hand side of the nebulizer, and pull out the gas inlet tubing.

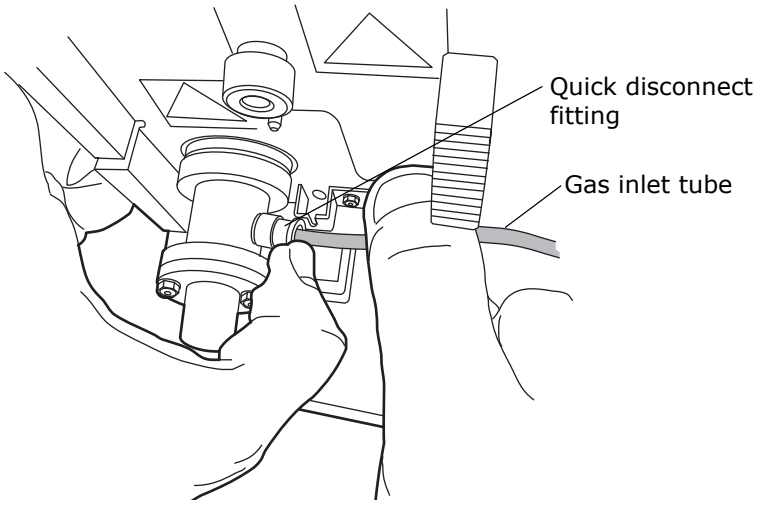

6. Push in and turn the nebulizer counterclockwise so that the quick-disconnect tubing fitting is at the twelve o’clock position. Then remove it from the nebulization chamber.

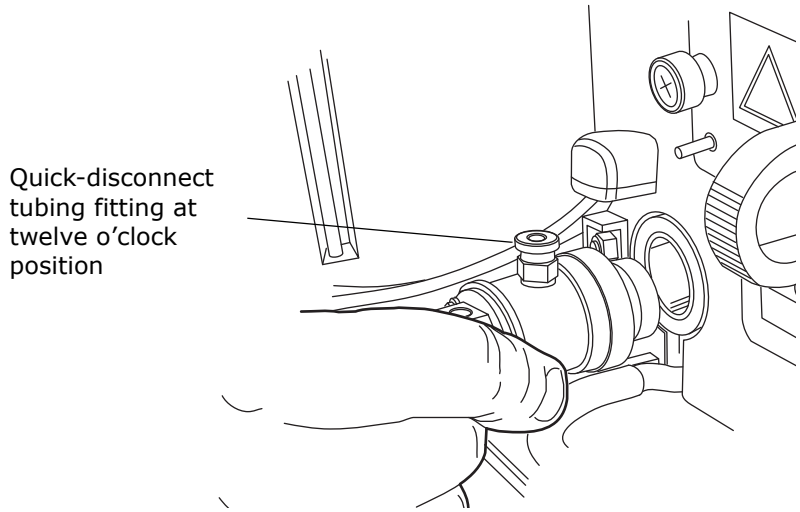

7. Remove the packing ring from the old nebulizer, and slide it onto the new nebulizer. If the old packing ring is damaged, replace it with a new one.
8. Align the two pins inside the desolvation chamber with the grooves in the new nebulizer. The quick-disconnect tubing fitting will be at the twelve o’clock position.
9. Push the nebulizer into the nebulization chamber, and turn it clockwise until it snaps into place.
10. Insert the gas inlet tubing into the quick disconnect-tubing fitting on the right side of the nebulizer.
11. Reconnect the solvent inlet tubing.
12. Power-on the detector.

See also: “Selecting the type of nebulizer” on page 70.

4.5 Cleaning the nebulizer ultrasonically

To clean the nebulizer:

1. Stop the liquid flow, and remove the solvent inlet line.
2. Power-off the detector, and disconnect the power cable from the rear panel.

Warning: To avoid burn injuries, do not touch the nebulizer until its temperature cools to less than 30 °C, as displayed on the detector home screen. If its temperature exceeds 30 °C, let the nebulizer cool in one of two ways before touching it:

- Wait 30 minutes after powering-off the detector.
- Wait 10 minutes after specifying Cool in the Nebulizer and Drift Tube Temperature Control Home screen (see page 62).

3. Open the door.
4. If a column or second detector is connected to the system, disconnect the solvent inlet tubing from the front of the nebulizer as follows:
   a. Use a 5/16-inch wrench to loosen the compression screw that holds the inlet tubing in place.

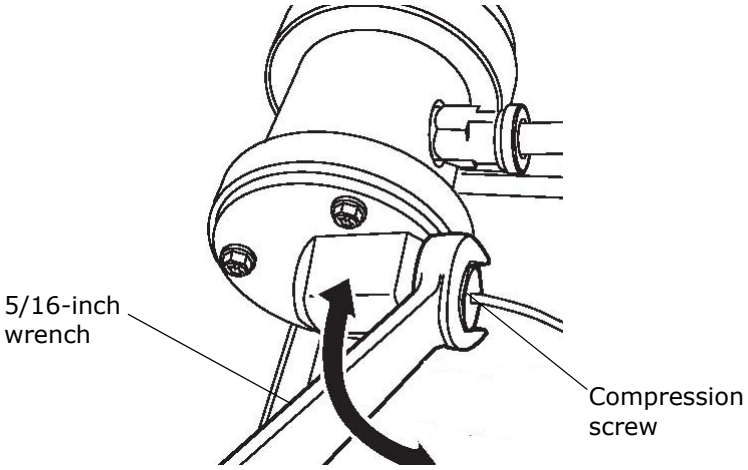

   b. Remove the solvent inlet tubing from the nebulizer.
5. Push in the quick-disconnect tubing fitting on the right-hand side of the nebulizer, and pull out the gas inlet tubing.

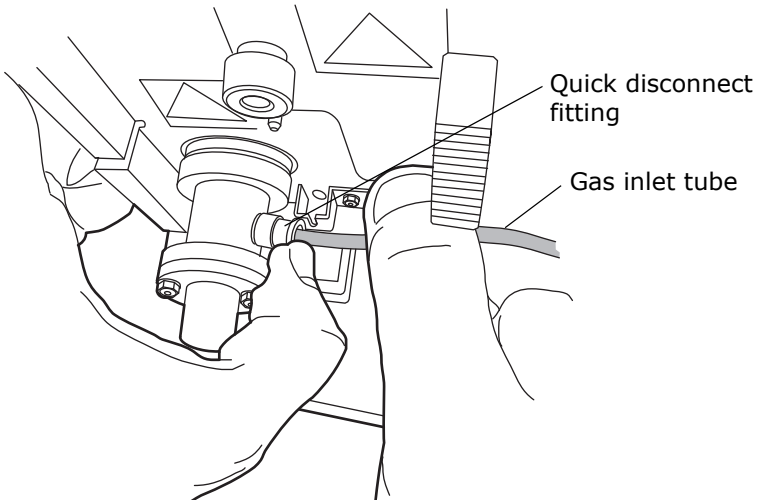

6. Push in and turn the nebulizer counterclockwise so that the quick-disconnect tubing fitting is at the twelve o’clock position. Then remove it from the nebulization chamber.

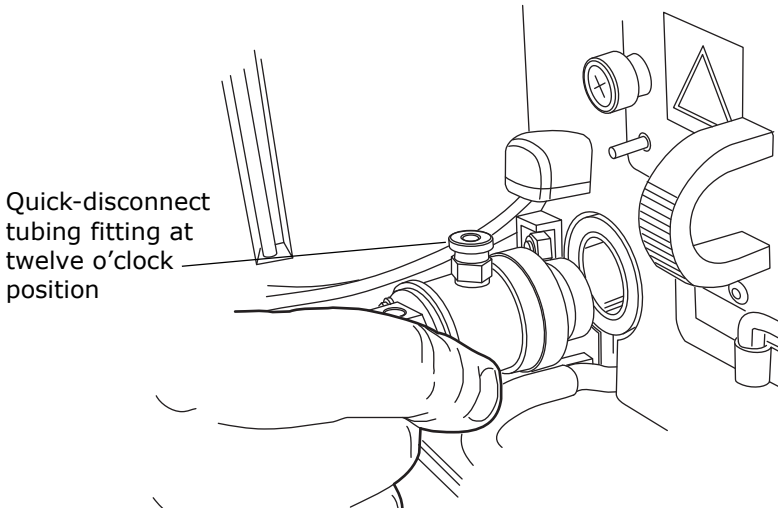

7. Remove the packing ring from the nebulizer.
8. Place the nebulizer upright in a beaker so that it stands up.
9. Pour 100% HPLC-grade water or a mixture of organic solvent compatible with your mobile phase into the beaker.

   Important: Do not submerge the gas inlet fitting or solvent inlet fitting in the liquid. Doing so can cause permanent damage to the fitting.

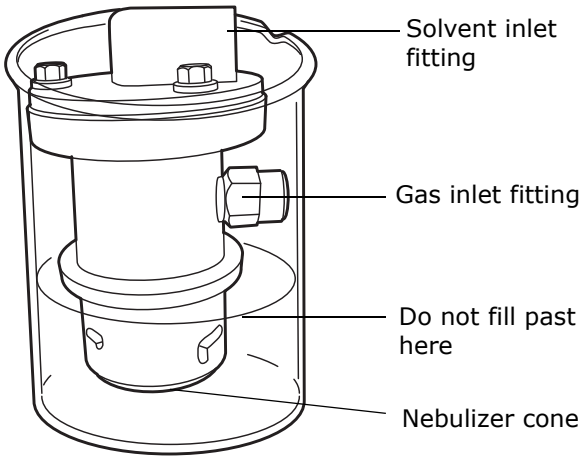

10. Place the beaker in an ultrasonic bath for 10 to 15 minutes.
11. Remove the beaker from the bath.
12. Remove the nebulizer from the beaker.
13. Insert the gas inlet tubing into the quick-disconnect tubing fitting on the right side of the nebulizer, and place the nebulizer in a dry beaker so that it stands up.

14. Run gas at 410 kPa (4.1 bar, 60 psi) for 5 to 10 minutes through the nebulizer to blow out any excess liquid.
15. Reinstall the nebulizer (see page 34).
16. Reset the system to operating conditions and evaluate chromatography.

4.6 Cleaning the drift tube

To clean the drift tube:

1. Increase the nebulizer power to 75%.
2. Set the drift tube temperature to 100 °C.

   Note: If the drift tube cannot attain 100 °C and an error message appears, drop the nebulizer in five degree increments until a steady temperature without errors can be attained.
3. Remove the column.
4. Flush the system with 100% HPLC-quality water for 60 minutes at 1.000 mL/min.
5. Reassemble the detector for operation.
6. Reset the system to operating conditions and evaluate chromatography.

4.7 Servicing the vapor trap

To service the vapor trap:

1. Unscrew the vapor trap bottle from the cover, and empty the contents of the bottle into an appropriate waste container.

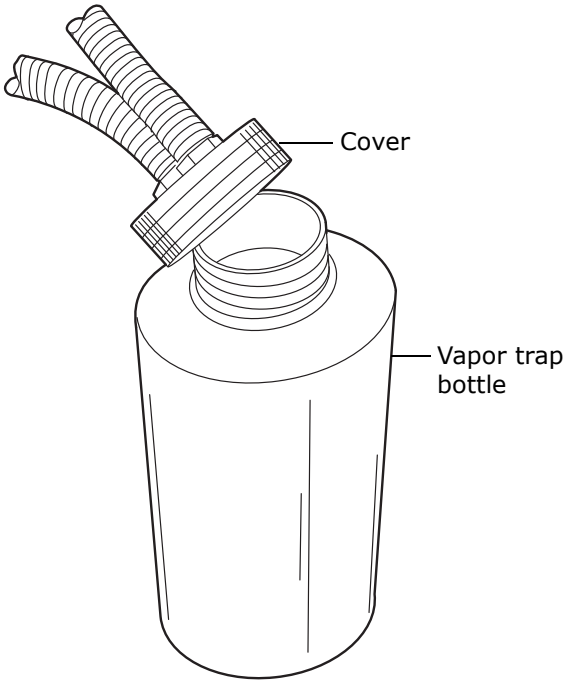

2. Replace the vapor trap cover.

4.8 Replacing fuses

Warning: To avoid electric shock, power-off and unplug the detector before examining the fuses. For continued protection against fire, replace fuses only with those of the same type and rating indicated on the module.

The detector requires two 5.00 A, 250 V, 5 × 20 mm (IEC) fuses.

Suspect a fuse is open or otherwise defective when,

- the detector fails to power-on;
- the display is blank;
- the fan does not operate.

To replace the fuses:

Requirement: Replace both fuses, even when only one is open or otherwise defective.

1. Power-off the detector and disconnect the power cord from the power entry module.
2. Pinch the sides of the spring-loaded fuse holder, which fits above the power entry module on the rear panel of the detector. With minimum pressure, withdraw the spring-loaded fuse holder.

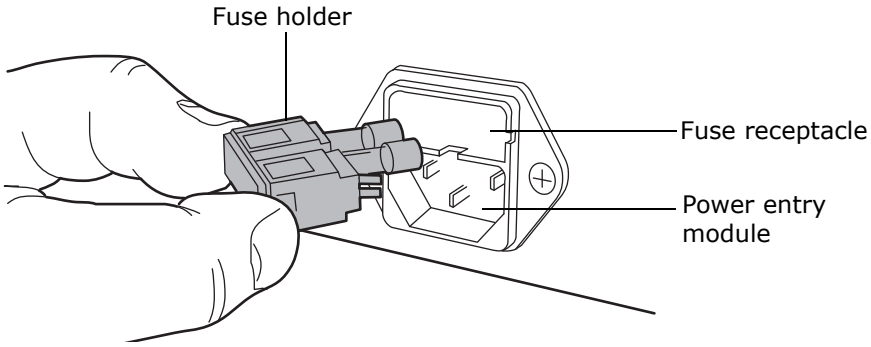

3. Remove and discard the fuses.
4. Make sure that the new fuses are properly rated for your requirements. Insert them into the holder and the holder into the power entry module, gently pushing until the assembly locks into position.
5. Reconnect the power cord to the power entry module.

4.9 Cleaning the instrument’s exterior

Use a soft cloth, dampened with water, to clean the outside of the detector.

5 Diagnostic Functions and Troubleshooting

Consult this chapter when troubleshooting problems with the ELS detector. However, bear in mind that the detector measures only the bulk properties of a system. Therefore, the cause of an apparent detector problem may actually originate with the chromatography or other system instruments.

If you isolate a general chromatography problem, see "Chromatography troubleshooting" on page 107. If you determine that a problem lies with the detector, refer to "Error messages" on page 97.

5.1 Error messages

5.1.1 Startup error messages

Startup confidence tests are executed on detector startup. They run after the detector is powered-on, and they determine whether the detector's electronics are performing properly.

If one or more of the startup confidence tests fail, the detector beeps and displays an error message.

When you encounter an error message, use the Enter key to clear it and continue operating the detector while following any recommended corrective action.

5.1.2 Operational error messages

During initialization and operation, the detector might display an error message screen. Errors described on this screen can be catastrophic in nature, preventing further operation of the detector, suspending the light scattering display and halting output. The error messages can also be informational, advising you to take appropriate action.

When you encounter an informational error message, press Enter to clear the message and continue operating the detector, following any recommended corrective action.

When you encounter a catastrophic error, power-off and then power-on the detector. If the error persists, review "General troubleshooting" on page 106 and the online Help. If you cannot resolve the problem, contact Waters Technical Service.

5.2 User-selectable diagnostic functions

5.2.1 Overview

You can run diagnostic functions to troubleshoot the detector and verify that its electronics and optics are working properly.

To perform user-selectable diagnostic functions:

1. Press DIAG on the detector's front panel.

   Result: The detector displays the diagnostic functions.

   Figure 5–1: Diagnostic functions menu

   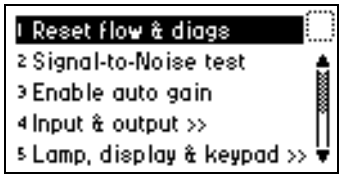

2. To access a specific diagnostic function, press the ▲ or ▼ key to navigate to the function you want to run and press Enter, or select a number between 1 and 9 that corresponds to the number on the detector keypad.

   Tip: Menu items that display further choices are accompanied by >>.

Table 5–1: Diagnostic functions

Diagnostic function	Description
Reset flow & diags	Resets all diagnostic functions to default values. Resets the Stop Flow output. Removes sticky diagnostics and the wrench icon.
Signal-to-Noise test	Runs the signal-to-noise test.
Auto gain	Determines the optimum gain settings for a chromatogram.
Input & output	Lists diagnostic functions for contact closure inputs and single switch output: 1. Auto zero offset 2. Fix voltage 3. Contact closures & events 4. Previous choices
Lamp, display & keypad	Lists diagnostic functions for lamp, display, and keypad: 1. Change lamp 2. Lamp history 3. Test keypad 4. Test display 5. Previous choices

Table 5–1: Diagnostic functions (Continued)

Diagnostic function	Description
Gas & temp control	Lists diagnostic functions for gas and temperature control: 1. Gas control 2. Neb & drift heaters 3. Opt & col heaters 4. Previous choices
Sample & ref energy	Allows you to view the raw sample signal and reference energy signal information.
Service	Lists diagnostic functions used by Waters service personnel.

5.2.2 "Sticky diagnostics" tests

The detector uses two types of user-selectable diagnostic tests: persistent and nonpersistent. A persistent test, also called a "sticky diagnostic", remains enabled until you disable it. Nonpersistent tests end, and previous operating conditions are restored as soon as you exit the test.

When a sticky diagnostic is active, the detector Home screen displays a wrench icon:

- You can disable a sticky diagnostic by resetting it to the default settings.
- You can disable all active sticky diagnostics by pressing DIAG 1, Reset Flow & Diags.

If no sticky diagnostics are active, the wrench icon does not appear in the home screen.

Figure 5–2: Home screen with sticky diagnostics active

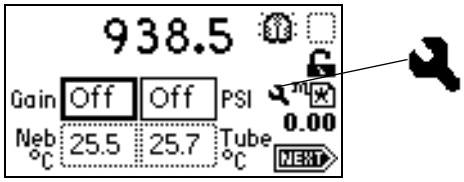

The user-selectable sticky diagnostics are Auto Gain and Simulate Peak.

To cancel a sticky diagnostic function, reselect it or select 1, Reset Flow & Diags from the Diagnostics menu.

5.2.3 Running diagnostic tests

The detector employs both user-selectable and service diagnostics. You access user diagnostics by pressing DIAG. Only qualified Waters service personnel can access service diagnostics. To exit any diagnostic when completed, press DIAG to return to the diagnostics menu or HOME to return to the Home screen.

5.2.4 Running the Auto Gain diagnostic function

When enabled, Auto Gain determines the optimum gain settings for a chromatogram. At the end of a run, the timed event table contains the optimum gain setting, and the function is disabled.

Tip: To access the timed event table, press Shift > METHOD, and then press 1 Timed Events.

To enable the Auto Gain diagnostic test:

1. Program a timed event.
2. Press DIAG 3, Enable Auto Gain.

   Result: The Auto Gain enabled screen appears.

   Figure 5–3: Auto Gain enabled diagnostic test screen

   Tip: To disable the Auto Gain diagnostic test, press Enter.

To disable the Auto Gain diagnostic test after it was enabled:

1. Press DIAG on the detector front panel.

   Result: The Diagnostic functions menu appears.
2. Press DIAG 3, Disable Auto Gain.

   Result: The Auto Gain disabled diagnostic tests screen appears.

   Figure 5–4: Auto Gain disabled diagnostic test screen

   Tip: To reenable the Auto Gain diagnostic, press Enter.

5.2.5 Input and output diagnostic functions

Use the input and output diagnostic functions for these purposes:

- To view and reset the sample signal’s auto zero value
- To fix (establish) voltage
- To monitor two event output switches and four event input switches

To perform any of the input and output diagnostic functions, press DIAG 4, Input & output. The Input & Output diagnostic functions menu appears.

Figure 5–5: Input & Output diagnostic functions menu

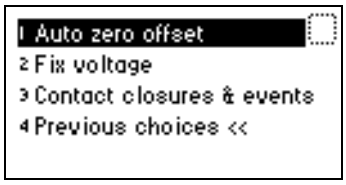

5.2.5.1 Displaying the Auto Zero offset

Using this diagnostic function, you view and reset the sample signal's auto zero offset value to zero.

To display the Auto Zero offset:

1. From the Input & Output diagnostic functions menu, press 1, Auto zero offset.

   Result: The Auto Zero Offset diagnostics screen appears.

   Figure 5–6: Auto Zero Offset diagnostics screen

2. Press Cancel to reset the sample signal's auto zero value to zero.

5.2.5.2 Setting fixed voltage output

From the Input & Output diagnostic functions menu, press 2, Fix voltage, to establish voltage levels for the detector output and auxiliary output. Both must be fixed, but the values can be set independently. The valid range of voltages is ±2000 mV for both channels. The voltage is driven on the selected channel (Detector Out or Auxiliary Out).

5.2.5.3 Monitoring contact closures and events

To monitor contact closures and events:

1. From the Input & Output diagnostics menu, press 3, Contact closures & events, to monitor the four contact closure inputs and to control the two switch outputs.

Figure 5–7: Switch & events display diagnostic screen

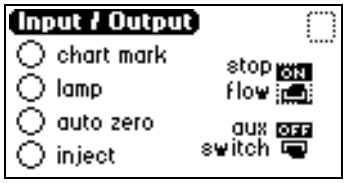

The Input & Output diagnostic function allows real-time monitoring of the state of the contact closure inputs. A solid circle indicates the contact closure is closed (ON = High). An open circle indicates the contact closure is open (OFF = Low).

2. For the outputs listed, you can take the following actions:
   a. Press Enter to display the active switch (surrounded by a dotted-line border).
   b. Press any numerical key to change the status of the switch (from On to Off, or vice-versa).

5.2.6 Lamp, display, and keypad diagnostic functions

To access the lamp, display, and keypad diagnostic functions, press DIAG 5.

5.2.6.1 Change Lamp diagnostic function

Use the Change Lamp diagnostic function to enter the serial number and installation date of a new lamp.

To use the Change Lamp function:

1. From the Lamp display & keypad menu, press 1, Change lamp.

   Result: The Change Lamp diagnostic screen appears.

   Figure 5–8: Change Lamp diagnostic screen

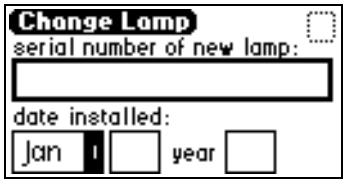

2. Enter the serial number of the new lamp and the date it was installed, and then press Enter.

   Result: The second Change Lamp diagnostic screen appears.

   Figure 5–9: Second Change Lamp diagnostic screen

3. Confirm your entries, and then press Enter.

   Result: The third Change Lamp diagnostic screen appears.

   Figure 5–10: Third Change Lamp diagnostic screen

4. Press Enter to exit the Change Lamp function.

5.2.6.2 Lamp History diagnostic function

Use the Lamp History diagnostic function to view lamp use information.

To use the Lamp History function:

From the Lamp, display & keypad menu, press 2, Lamp history. The Lamp History diagnostic screen appears.

Figure 5–11: Lamp History diagnostic screen

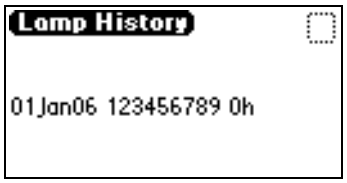

To use the Test Keypad diagnostic function:

1. From the Lamp, display & keypad menu, press 3, Test keypad.

   Result: A representation of the keypad appears.

2. Press any key to begin the test, and then press each key until you try all of them. If the keypad is operating properly, each key location is filled in then cleared with another press of the key. If any key does not respond when pressed, contact your Waters service representative.

   Tip: You must press Enter twice to exit the keypad diagnostic.

   Figure 5–12: Test Keypad diagnostic screen

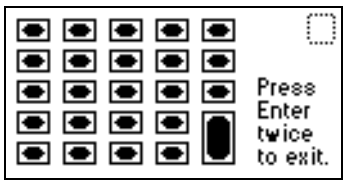

To use the Test Display function:

1. From the Lamp, display & keypad menu, press 4, Test display. The display fills from top to bottom and right to left. It then returns to the Lamp, display & keypad menu. If the display does not completely fill, either horizontally or vertically, contact your Waters service representative.
2. From the Lamp, display & keypad menu, press 5 to return to the Diagnostics menu.

5.2.7 Gas and temperature control diagnostic functions

To access the gas and temperature control tests, press DIAG 6.

To view the nebulizer and drift tube temperature:

From the Gas & temp control menu, press 2, Neb & drift heaters, to run the nebulizer and drift tube heater temperature control test. The Nebulizer & Tube Heater Temperature Control screen appears.

Figure 5–13: Nebulizer and drift tube temperature control diagnostic screen

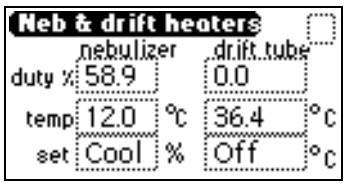

5.2.7.1 Using the gas control diagnostic

With the Gas Control diagnostic function, you can control the gas pressure regulator and gas solenoid valve independently. The diagnostic screen displays the state of the gas pressure switch and the value of the pressure transducer. When the function ends, the original state of the gas regulator and gas solenoid valve is restored.

Tips:

- Gas pressure should be high enough to prevent extended exposure time of the sample in the drift tube area. Gas pressure that is too low could cause higher-than-desired dispersion of particles and, consequently, loss of sensitivity.
- Gas pressure should be high enough to prevent the formation of large particles that could cause detector noise.

To use the gas control diagnostic:

1. From the Gas & temp control menu, press 1, Gas control, to run the gas control diagnostic.

   Result: The Gas Control diagnostic screen appears.

Figure 5–14: Gas Control diagnostic screen

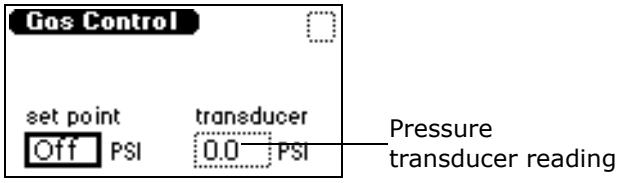

2. Enter the gas pressure, in psi, in the set point field.

   Requirement: Use at least 450 kPa (4.5 bar, 65 psi), to run the gas control diagnostic.

3. To stop gas flow, enter 0 in the set point field.

5.2.8 Sample and reference energy diagnostic function

With the sample and reference energy diagnostic function, you view raw sample, signal, and reference energy information, and you change the state of the lamp and gain.

To use the sample and reference energy diagnostic function:

1. Press DIAG 7, Sample & ref energy.

   Result: The sample and reference energy diagnostic screen appears.

   Figure 5–15: Sample and reference energy diagnostic screen

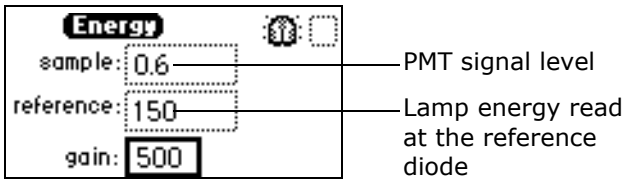

2. Enter the gain value to view the difference between the raw sample signal and reference energy information.

5.2.9 Generate Test Peaks diagnostic function

The Generate Test Peaks diagnostic function allows you to override sample signal input with a simulated Gaussian peak.

To use the generate test peaks function:

1. Press DIAG 8, Generate test peaks. If the Generate Test Peaks diagnostic function is disabled, the Test peaks enabled diagnostic screen appears.

Figure 5–16: Test peaks enabled diagnostic screen

2. To disable the Generate Test Peaks function, press Enter.

5.3 General troubleshooting

This section suggests possible causes of errors and recommends troubleshooting actions. Keep in mind that the source of apparent detector problems can actually be the chromatography, or it can involve other system instruments.

Most detector problems are relatively easy to correct. If, after running the diagnostic functions applicable to your problem and troubleshooting the detector, you cannot correct an error condition, contact Waters' Technical Service department.

5.3.1 Power surges

Power surges, line spikes, and transient energy sources can adversely affect detector operations. Ensure that the electrical supply used for the detector is properly grounded and free from any of these conditions.

5.3.2 Detector troubleshooting

The following table contains general hardware troubleshooting for the detector:

Table 5–2: Detector troubleshooting

Symptom	Possible cause	Corrective action
Analog output incorrect	LSU or maximum output setting changed	Reset the LSU or maximum output setting.
Column heater module not functioning	Column heater module is not powered on	Power-on the column heater module.
	Column heater module is not connected to the detector	Connect the column heater module to detector.

Table 5–2: Detector troubleshooting (Continued)

Symptom	Possible cause	Corrective action
Detector inoperative	Fuse blown	Check that the front panel display is operational; if it is not, check or replace the AC rear panel fuse.
	No power at outlet	Check the outlet by connecting another electrical unit known to be in working order and see if it operates.
	Bad internal power supply or circuit board	Call Waters Technical Service.
Front panel display fails to illuminate	Broken electrical connection	Check power connections.
	Fuse blown	Check and, if necessary, replace fuse(s).
	Bad LCD or control board	Call Waters Technical Service.
Fumes detected in lab	Exhaust is restricted	Ensure the exhaust hose from the detector runs downward, toward the floor, and is unobstructed.
	Waste tube is not properly connected to the siphon drain, causing solvent to collect in the drip tray	Properly attach and route the waste tube.
Keypad not functioning	Keypad defective	1. Power-off and then power-on the detector. 2. Run the keypad diagnostic (see page 103). 3. If the problem persists, call Waters Technical Service.
Lamp not functioning	Lamp burned out	1. Power-off and then power-on the detector. 2. If the problem persists, replace the lamp cartridge (see page 86).

5.4 Chromatography troubleshooting

This section contains chromatography troubleshooting tables that include symptoms, possible causes, and suggested corrective actions. These tables can help you isolate the possible causes of problems related to these factors:

- Abnormal baseline (drift, noise, or cycling) (see the table titled "Abnormal baseline troubleshooting" on page 108).

- Erratic or incorrect retention times (see the table titled "Troubleshoot general chromatography problems" on page 112).
- Poor peak resolution (see the table titled "Peak resolution troubleshooting" on page 113).
- Incorrect qualitative/quantitative results (see the table titled "Incorrect results troubleshooting" on page 114).

Warning: To avoid chemical hazards, always observe safe laboratory practices when operating your system. Refer to the Material Safety Data Sheets shipped with solvents for handling information.

If your system exhibits symptoms *not* addressed in one of the tables, refer to "General troubleshooting" on page 106. If you need further help, contact Waters Technical Service.

5.4.1 Abnormal baseline

Drift, noise, and cycling are common symptoms of an abnormal baseline.

5.4.1.1 Cycling

If the baseline is cycling, determine the period of the cycle and whether it is related to the flow rate or fluctuations in ambient temperature or pressure.

Refer to the following table to troubleshoot problems with your baseline:

Table 5–3: Abnormal baseline troubleshooting

Symptom	Possible cause	Corrective action
Baseline drift	Mobile phase mixing problem causing improper evaporation.	Correct mobile phase composition. Use high-quality HPLC water and organic solvents.
	Drift tube temperature not optimized correctly.	Recalculate temperature for least volatile mobile phase during a gradient run. Reset temperature as necessary (see page 61).
	Column shedding particles during gradient run.	Recalculate temperature for least volatile mobile phase during a gradient run. Reset temperature as necessary (see page 61).
Baseline noise (regular)	Air in mobile phase or pump.	Degas mobile phase. Purge pump to remove air.
	Pump pulsations.	Incorporate pulse dampener into system. Correct pump check valve or pump seal problems.

Table 5–3: Abnormal baseline troubleshooting (Continued)

Symptom	Possible cause	Corrective action
Baseline noise (irregular)	Improper volatilization of mobile phase.	Check drift tube temperature setting, optimize temperature (see page 61).
	Dirty nebulizer or drift tube.	Clean nebulizer or drift tube (see page 90) or call Waters Technical Service.
	Varying or low gas flow.	Check gas flow setting. Optimize gas flow. Reset gas flow as necessary. Check source gas.
	Obstructed or full exhaust trap.	Check for kinks in exhaust line or empty condensate flask.
	Column leaking silica or packing material.	Replace column and flush it thoroughly before connecting it to the detector.
	Air trapped in system.	Flush system with strong solvent.
	Leaks.	Check system for loose fittings. Check pump for leaks or unusual noise. Change pump seals if necessary.
Broad peaks	Leak (especially between the column and detector).	Check for loose fittings.
	Tubing between column and detector too long or too large of an ID.	Use short piece of 0.005-to-0.010-inch ID tubing.
Change in peak height or loss in sensitivity	Nebulizer blocked.	Clean nebulizer or drift tube (see page 90).
	Dirty nebulizer or drift tube.	Clean nebulizer or drift tube (see page 90) or call Waters Technical Service.
	Detector/recorder setting changed.	Check drift tube temperature and gas flow settings.
	Detector exhaust too strong.	Move exhaust hose further away from vacuum.
Detector is making a gurgling sound	Detector exhaust too strong.	Move exhaust hose further away from vacuum.
Drift tube not heating	Tube temperature not set correctly.	Adjust tube setting to correct temperature (see page 61).
	Oven temperature switch defect.	Contact Waters Technical Service.

Table 5–3: Abnormal baseline troubleshooting (Continued)

Symptom	Possible cause	Corrective action
Drift tube overheating	Tube temperature not set correctly.	Adjust tube setting to correct temperature.
	Temperature sensor malfunctioning.	Contact Waters Technical Service.
High solvent pressure	Blocked nebulizer.	1. Clean the nebulizer (see page 90). 2. Replace nebulizer (see page 90).
Nebulizer cooler not functioning	Nebulizer cooler malfunctioning.	1. Ensure there is 5 cm (2 inches) clearance on the left side of the detector to allow venting for nebulizer cooling. 2. Power-off and then power-on the detector. 3. Allow 30 to 60 minutes for the detector to equilibrate. 4. If the problem persists, call Waters Technical Service.
No mobile phase flow	Detector went into error and shut off pump.	Determine and fix the error, then restart the pump.
	Flow interrupted or obstructed.	Check mobile phase level in reservoirs. Check flow throughout system. Make sure mobile phase inlet filter is clean.
	Leak.	Check system for loose fittings. Check for leak or unusual noises. Change pump seals, if necessary.
	Air in pump head.	Prime the pump. Consult the operator's guide that accompanied the pump for more information.
No gas flow	Gas source valve closed.	Open gas valve and set to desired rate.
	Blocked nebulizer.	Clean or replace nebulizer (see page 90 and page 87).
	Source gas pressure too low.	Check gas source.
	Clogged inlet gas filter.	Contact Waters Technical Service to replace filter.
No power	Line unplugged.	Plug in power line.
	Blown fuse.	Replace fuse (see page 94).
No LCD display	Electrical problem.	Contact Waters Technical Service.

Table 5–3: Abnormal baseline troubleshooting (Continued)

Symptom	Possible cause	Corrective action
No peaks detected	Sample is volatile at detector conditions.	Modify method to use a more volatile mobile phase.
	Sample being retained on column.	Remove column. Connect injection valve directly to detector and inject into mobile phase. Peak should be seen immediately.
	Detector output signal not zeroed.	Press the Auto Zero key.
	No gain set.	Set gain (see page 63).
	Detector exhaust too strong.	Move exhaust hose further away from vacuum.
	Drift tube temperature too high.	Decrease drift tube temperature (see page 61).
Rounded peaks	Detector time constants set too high.	Reduce setting to lowest value or value at which no further improvements are seen.
Spiking	Gas source contaminated or of low purity.	Use clean, dry, inert gas, usually 99.9% pure nitrogen.
	Drift tube dirty.	Clean drift tube. Contact Waters Technical Service.
	Mobile phase contaminated or made of low quality material.	Check make up of mobile phase.
	Gas flow set too low.	Increase gas flow.

5.4.2 Erratic or incorrect retention times

When you troubleshoot retention time problems, determine whether the retention times,

- change from run to run or are constant from run to run but outside the allowable range for the assay;
- vary due to pressure fluctuations that are short-term (with each pump cycle) or long-term (over the course of several minutes);
- are associated with an absolute pressure change, that is, if the pressure is constant but higher or lower than the normal operating pressure;
- change suddenly at the end of a series of runs, which may indicate that air is dissolving in the mobile phase, that the mobile phase is degrading, or that the column is contaminated;
- change early in a series of runs and tend to become constant or fall within range after a few minutes, which can indicate that the column was not equilibrated or that the solvent is not properly degassed and sparged.

Table 5–4: Troubleshoot general chromatography problems

Symptom	Possible cause	Corrective action
Erratic retention times	Air bubble in pump head	Degas all solvents, prime pump (see page 121).
	Malfunctioning pump check valves	Clean, replace, or rebuild pump check valves.
	Leaking pump seals	Replace pump seals.
	Separation chemistry	Check mobile phase and column.
	Clogged solvent filters	Replace filters.
Increased retention times	Incorrect flow rate	Verify flow rate.
	Incorrect solvent composition	Change solvent composition.
	Column heater module not operating	Power-on column heater module.
	Column not equilibrated	Equilibrate column.
	Incorrect column or guard column	Use correct column or guard column.
Doubled retention times	Air bubble in pump head	Prime pump to remove bubble.
	Malfunctioning pump check valve(s)	Clean, replace, or rebuild pump check valve(s).
	Broken pump plunger	Replace the plunger.
Reduced retention times	Incorrect flow rate	Verify flow rate.
	Incorrect solvent composition	Change composition.
	High column temperature	Reduce column temperature (see page 64).
	Incorrect column pretreatment	See column manual.
	Column contaminated	Clean or replace column.
	Incorrect column or guard column	Use correct column or guard column.
Reproducibility errors	Solvent not properly degassed/sparged	Degas or sparge solvent (see page 121).
	Incorrect chemistry or integration	Check chemistry or integration.
	Column not equilibrated	Equilibrate column.
	Injector problem	Troubleshoot injector.

5.4.2.1 Poor peak resolution

Before you address problems with peak resolution, be certain that peaks elute at the correct retention time. The most common causes of poor peak resolution can also appear as retention time problems.

If peak retention times are correct, determine whether poor resolution occurs throughout the chromatogram or at a single peak pair.

If efficiency of early peaks is poor, extra-column band broadening, such as auto injector or guard column failure, can be at fault. If peak efficiency is poor throughout the chromatogram, post-column band-broadening or loss of column efficiency can be the cause.

If only one peak in a chromatogram is badly-shaped, the peak component may be interacting with the column through a chemical mechanism different from the components in the other peaks. To troubleshoot this resolution problem, you need to understand the separation chemistry.

Use the following table to troubleshoot peak resolution problems that may be affecting your results:

Table 5–5: Peak resolution troubleshooting

Symptom	Possible cause	Corrective action
Straight baseline, no peaks	No pump flow	Set pump flow rate.
	Lamp not operating	Check method. Lamp might be turned off. Call Waters Technical Service.
	Detector not zeroed	Auto zero detector baseline. Check cables between unit and recorder.
	Improper connection between the detector and the recorder	Auto zero detector baseline. Check cables between unit and recorder.
	No sample injected	Check injector.
	Leak in solvent path	Check fittings and drip tray.
	Bad column	Clean or flush or replace column. Call Waters Technical Service.
	Detector gas flow set to off	Turn gas flow back on.
	No gain set	Set gain (see page 63).

Table 5–5: Peak resolution troubleshooting (Continued)

Symptom	Possible cause	Corrective action
Flat-topped peaks	Detector not zeroed	Auto zero detector baseline.
	Incorrect recorder input voltage	Adjust recorder input voltage, or connect cable to correct port on recorder.
	Sample concentration or injection volume exceeds voltage output of detector	Decrease sample concentration or injection volume.

5.4.2.2 Incorrect qualitative and quantitative results

If a peak is incorrectly identified by a data system or integrator, ensure that the retention time is correct. If retention times are correct, and peak resolution is good, the cause of qualitative and quantitative errors is not likely to be chromatographic; it is more likely due to inadequate sample preparation or faulty processing of the data (integration).

Refer to the following table to troubleshoot problems with qualitation and/or quantitation:

Table 5–6: Incorrect results troubleshooting

Symptom	Possible cause	Corrective action
Decreased peak height	Leak in injector.	Troubleshoot injector.
	Degraded, contaminated, or improperly prepared sample.	Use fresh sample.
	Column contaminated.	Clean or replace column.
	Loss of column efficiency.	Clean or replace column.
	Change in mobile phase composition.	Correct mobile phase pH or ionic composition.
	Incorrect flow rate.	Change flow rate.
	Drift tube temperature too high.	Decrease drift tube temperature (see page 61).
	Nebulizer not spraying properly.	Clean/replace nebulizer.

Table 5–6: Incorrect results troubleshooting (Continued)

Symptom	Possible cause	Corrective action
Increased noise	Air bubble in flow path.	Replace column with union and purge flow path at 10 mL/min.
	Mobile phase not degassed.	Degas or sparge mobile phase.
	Contaminated mobile phase.	Use fresh mobile phase.
	Drift tube temperature too low.	Increase drift tube temperature (see page 61).
	Drift tube temperature too high.	Decrease drift tube temperature (see page 61).
	Nebulizer temperature too high.	Decrease nebulizer power level (see page 61).

6 Optimizing detection and preparing solvents

Proper solvent selection and preparation are critical in differential evaporative light scattering detection to prevent baseline changes such as drift, noise, or an erratic baseline. This chapter presents information on,

- detector performance;
- common solvent problems;
- solvent selection;
- degassing a solvent.

Warning: To avoid chemical hazards, always observe safe laboratory practices when handling solvents. Refer to the Material Safety Data Sheets shipped with solvents for handling information.

6.1 Optimizing detector performance

6.1.1 Optimize the mobile phase

Particulate matter in the mobile phase increases the background and noise. In most cases, water from a high quality purification system and HPLC-grade solvents are sufficient. When comparing solvents, the most critical parameter is the amount of residue after evaporation, which should be less than 1 ppm. For that reason, the mobile phase should contain volatile solvent modifiers, not nonvolatile ones, such as ammonium acetate, ammonium bicarbonate, formic acid, phosphoric acids, sulfuric acid, phosphates, and sulfates. MS-compatible, volatile solvent modifiers, such as CF_3COOH (Trifluoroacetic Acid) and CH_3COOH (Acetic Acid), can be used with the ELS detector.

6.1.2 Sample pretreatment

If the sample contains any particulate matter, filter it through a 0.2-µm or 0.45-µm filter before injection.

6.1.3 Column treatment

The chromatographic column contains microparticles to separate the compounds being analyzed. Under certain circumstances, the column packing undergoes chemical

and/or mechanical breakdown, which can introduce particulate matter into the detector, increasing noise.

Column breakdown depends on particle size, the type of column used, column manufacturer, and the nature of the mobile phase. For example, high pH degrades silica-based columns.

! **Notice:** To avoid damaging the nebulizer, flush columns with at least 10 column volumes of clean mobile phase before connecting them to the nebulizer. For example, flush a 2.1 × 50 column for 10 minutes at 0.5 ml/minute.

6.2 Selecting a solvent

An ideal solvent for your analysis has good solubility characteristics for your application, and gives satisfactory baseline noise performance.

6.2.0.1 Solvent quality

Use spectral-grade or HPLC-grade solvents to ensure reproducible results and minimal instrument maintenance.

A dirty or impure solvent can cause these problems:

- Baseline noise and drift
- Plugged columns
- Blockages in the fluid path

6.2.0.2 Preparation checklist

The following solvent preparation guidelines help to ensure stable baselines and good resolution:

- Filter solvents with a 0.45-µm filter.
- Degas and/or sparge the solvent.
- Protect solvents from shock and drafts.

6.2.0.3 Water

Use water only from a high-quality water purification system. If the water system does not provide filtered water, filter it through a 0.45-µm membrane filter before use. The total organic carbon reading should be as low as possible (<5 ppb).

6.2.0.4 Buffer compatibility

The detector cannot be used with nonvolatile solvents such as salt-buffer solutions. Volatile modifiers, such as acetic acid and ammonium formate, may be used successfully.

Mobile phase modifiers that are suitable for mass spectrometry (for example, ammonium acetate, ammonium bicarbonate, ammonium formate) can be used for evaporative light scattering detection in concentrations of less than 0.01 M, or 0.1% (v/v %). Higher concentrations of nonvolatile materials in the mobile phase cause greater baseline noise, lower sensitivity, and nebulizer and small bore tubing blockages. High purity mobile phases with low boiling points are recommended.

Notice: Nonvolatile buffers are not recommended for use with the detector. They cause noise and block fluid pathways.

6.2.0.5 Organic solvent compatibility

The ELS detector is fully compatible with standard chromatographic solvents including both reversed phase and normal phase organic solvents. The limitations of detector solvent compatibility are limits imposed by the chromatographic system in use.

6.2.0.6 Tetrahydrofuran (THF)

When you use unstabilized THF, ensure that your solvent is fresh. Previously opened bottles of THF contain peroxide contaminants, which cause baseline drift.

Warning: THF contaminants (peroxides) can explode when concentrated or evaporated to dryness.

Warning: Do not use flammable or combustible solvents with a non-inert gas, such as air.

6.2.0.7 Properties of common solvents

The following table lists the properties for some common chromatographic solvents:

Table 6–1: Properties of common solvents

Solvent	Vapor Pressure mm Hg (Torr)	Boiling Point (°C)	Flash Point (°C)
Acetone	184.5 at 20 °C	56.29	-20
Acetonitrile	88.8 at 25 °C	81.6	6
n-butyl acetate	7.8 at 20 °C	126.11	22
n-butyl alcohol	4.4 at 20 °C	117.5	37
n-butyl chloride	80.1 at 20 °C	78.44	-9
Chlorobenzene	8.8 at 20 °C	131.69	28
Chloroform	158.4 at 20 °C	61.15	
Cyclohexane	77.5 at 20 °C	80.72	-20
Cyclopentane	400 at 20 °C	49.26	-7
o-Dichlorobenzene	1.2 at 20 °C	180.48	66
Dichloromethane	350 at 20 °C	39.75	

Table 6–1: Properties of common solvents (Continued)

Solvent	Vapor Pressure mm Hg (Torr)	Boiling Point (°C)	Flash Point (°C)
Dimethyl acetamide	1.3 at 25 °C	166.1	70
N,N-Dimethylformamide	2.7 at 20 °C	153.0	58
Dimethyl sulfoxide	0.6 at 25 °C	189.0	88
1,4-Dioxane	29 at 20 °C	101.32	12
Ethyl acetate	73 at 20 °C	77.11	-4
Ethyl alcohol	43.9 at 20 °C	78.32	15
Ethyl ether	442 at 20 °C	34.55	-45
Ethylene dichloride	83.35 at 20 °C	83.48	13
Heptane	35.5 at 20 °C	98.43	-4
Hexane	124 at 20 °C	68.7	-22
Iso-octane	41 at 20 °C	99.24	-12
Isobutyl alcohol	8.8 at 20 °C	107.7	28
Isopropyl alcohol	32.4 at 20 °C	82.26	12
Isopropyl myristate	<1 at 20 °C	192.6	164
Methanol	97 at 20 °C	64.7	11
Methyl *t*-butyl ether	240 at 20 °C	55.2	-28
Methyl ethyl ketone	74 at 20 °C	79.64	-9
Methyl isobutyl ketone	16 at 20 °C	117.4	18
N-Methylpyrrolidone	0.33 at 25 °C	202.0	86
Pentane	420 at 20 °C	36.07	-49
n-Propyl alcohol	15 at 20 °C	97.2	23
Propylene carbonate		241.7	135
Pyridine	18 at 25 °C	115.25	20
Tetrahydrofuran	142 at 20 °C	66.0	-14
Toluene	28.5 at 20 °C	110.62	4
1,2,4-Trichlorobenzene	1 at 20 °C	213.5	106
Triethylamine	57 at 25 °C	89.5	-9
Trifluoroacetic acid		71.8	
Water	17.54 at 20 °C	100.0	
o-xylene	6 at 20 °C	144.41	17

6.2.0.8 Properties of volatile mobile phase modifiers

The following table lists the properties for volatile mobile phase modifiers.

Table 6–2: Properties of volatile mobile phase modifiers

	pKa	pKb	pH range	Boiling Point (°C)
Acids				
Acetic Acid	4.75	9.25		116.00
Carbonic Acid	6.37	7.63		
Formic Acid	3.75	10.25		100.70
Trifuoroacetic Acid	0.30	13.70		71.80
Bases				
Ammonia	9.25	4.75		-33.35
Ethylamine	10.81	3.19		16.60
Methylamine	10.66	3.34		-6.30
Triethylamine	11.01	2.99		89.30
Buffers				
Ammonium Acetate			3.8 to 5.8	
Ammonium Carbonate			5.5 to 7.5 and 9.3 to 11.3	
Ammonium Formate			3.0 to 5.0	

6.3 Solvent degassing

Using degassed solvents is one of the most important steps in solvent preparation. Degassing provides,

- stable baselines and enhanced sensitivity;
- reproducible retention times;
- stable pump or solvent delivery system operation.

This section presents information on the solubility of gases, solvent degassing methods, and solvent degassing considerations.

6.3.1 Solvent degassing methods

Solvent degassing helps you attain a stable baseline and also improves reproducibility and pump performance.

Three common methods used to degas solvents are,

- sparging with helium;
- reducing pressure by vacuum;
- using sonication.

These methods may be used individually or in combination. Vacuum-ultrasound followed by sparging is the most effective technique for most solvents.

6.3.1.1 Sparging

Sparging removes gases from solution by displacing dissolved gases in the solvent with a less soluble gas, usually helium. Well-sparged solvent improves pump performance. Helium sparging brings the solvent to a state of equilibrium, which may be maintained by slow sparging or by keeping a blanket of helium over the solvent. Blanketing inhibits reabsorption of atmospheric gases.

Tip: Sparging may change the composition of mixed solvents.

6.3.1.2 Vacuum degassing

The inline vacuum degasser operates on the principle of Henry's law to remove dissolved gases from the solvent. Henry's law states that the mole fraction of a gas dissolved in liquid is proportional to the partial pressure of that gas in the vapor phase above the liquid. If the partial pressure of a gas on the surface of the liquid is reduced, for example, by evacuation, then a proportional amount of that gas comes out of solution.

Tip: Vacuum degassing can change the composition of mixed solvents.

6.3.1.3 Ultrasonic agitation

High energy ultrasonic agitation drives energy into the solvent and causes the submicron-sized "bubbles" of gas to aggregate. As the gas bubbles aggregate, they become large enough to float out of the solvent and dissipate. Used alone, ultrasonic agitation degasses 4 liters of solvent in approximately 20 minutes.

6.3.2 Solvent degassing considerations

Select the most efficient degassing operation for your application. To remove dissolved gas quickly, consider the following.

6.3.2.1 Vacuum degassing

The longer a solvent is exposed to the vacuum, the more dissolved gases are removed. Two factors affect the amount of time the solvent is exposed to the vacuum:

- Flow rate – At low flow rates, most of the dissolved gas is removed as the solvent passes through the vacuum chamber. At higher flow rates, lesser amounts of gas per unit volume of solvent are removed.
- Surface area of the degassing membrane – The length of the degassing membrane is fixed in each vacuum chamber. To increase the length of membrane, you can connect two or more vacuum chambers in series.

The inline degasser is available as an option or factory-installed in the Waters Alliance Separations Module, XE model. Standalone inline degassers are also available.

6.3.2.2 Sparging

Helium sparging prevents reabsorption of atmospheric gases. Use this method to retard oxidation when you are using THF or other peroxide-forming solvents.

6.3.2.3 Ultrasound plus vacuum

Ultrasonic agitation combined with vacuum degasses solvent very quickly. This technique is less likely to change the composition of mixed solvents than vacuum alone because the mixed solvents are held under vacuum for only a short time (less than a minute is usually sufficient).

Warning: Do not apply vacuum to the brown glass bottles in which solvent is shipped. There is a high risk of implosion under these conditions. Use a thick-walled container designed for vacuum applications.

6.4 Optimization protocol

You must select the appropriate application operating parameters to obtain the best performance from your detector. Nebulizer gas flow rate, nebulizer temperature, and drift tube temperature must all be optimized for the best results.

6.4.1 Nebulizer gas pressure

Increased nebulizer gas flow rate causes a decreased signal response because of the resulting formation of smaller droplets that scatter less light. Lower gas flow rates tend to be more favorable because less gas is consumed and a better sensitivity is achieved. However, at some point this benefit is offset by an increase in baseline noise from the inefficient nebulization of the eluent, resulting in large droplets. The particle size of these droplets results in complex scattering mechanisms and poor detector performance. If you reduce the eluent flow, you must also reduce the nebulizer gas flow rate to maintain the optimum nebulized droplet size. Never decrease the nitrogen flow rate below 170 kPa (1.7 bar, 25 psi).

6.4.2 Nebulizer temperature

Note: Setting the nebulizer temperature high enough to boil the solvent can cause excessive baseline noise.

The detector starts more quickly when you decrease the temperature of the nebulizer chamber. The cooling option was added to effect faster equilibration.

Using the heater to increase the nebulizer temperature reduces solvent viscosity and the surface tension of sample droplets. It also increases the amount of analyte vapor in the drift tube, increasing signal levels. However, a heated nebulizer chamber can require a higher drift tube temperature, which can adversely affect temperature-sensitive samples. If your samples are temperature-sensitive, cooling the nebulizer increases sensitivity and permits a lower drift tube temperature, which can increase sensitivity even more.

Recommendation: In general, set as low a nebulizer temperature as possible.

6.4.3 Drift tube temperature

The effects of modifying the drift tube temperature are not as significant as those that result from changing the nebulizer gas flow rate. However, the evaporator temperature must be high enough to evaporate the solvent and sufficiently dry the particle plume without adversely affecting the sample. If the evaporator temperature is too low, the solvent can saturate the diffuser, resulting in high noise and spikes. If the drift tube temperature is too high, the sample may be volatilized, resulting in a small response.

6.4.4 Selecting the optimum temperature

When setting up a system, set the temperature of the drift tube to 50 °C if you are using reversed-phase chromatography. You can adjust these values during method optimization.

If you think your compound is thermally labile, you can use a lower temperature to improve detector sensitivity to minimize thermal loss. However, for a given solvent and flow rate, there is a point at which the noise in the chromatogram dramatically increases because all of the eluent is not vaporized. At higher flow rates, higher temperatures are required to minimize the noise level.

A Safety Advisories

Waters instruments and devices display hazard symbols that alert you to the hidden dangers associated with a product's operation and maintenance. The symbols also appear in product manuals where they accompany statements describing the hazards and advising how to avoid them. This appendix presents the safety symbols and statements that apply to all of Waters' product offerings.

A.1 Warning symbols

Warning symbols alert you to the risk of death, injury, or seriously adverse physiological reactions associated with the misuse of an instrument of device. Heed all warnings when you install, repair, or operate any Waters instrument or device. Waters accepts no liability in cases of injury or property damage resulting from the failure of individuals to comply with any safety precaution when installing, repairing, or operating any of its instruments or devices.

The following symbols warn of risks that can arise when you operate or maintain a Waters instrument or device or component of an instrument or device. When one of these symbols appear in a manual's narrative sections or procedures, an accompanying statement identifies the applicable risk and explains how to avoid it.

Warning: (General risk of danger. When this symbol appears on an instrument, consult the instrument's user documentation for important safety-related information before you use the instrument.)

Warning: (Risk of burn injury from contacting hot surfaces.)

Warning: (Risk of electric shock.)

Warning: (Risk of fire.)

Warning: (Risk of sharp-point puncture injury.)

Warning: (Risk of hand crush injury.)

Warning: (Risk of injury caused by moving machinery.)

Warning: (Risk of exposure to ultraviolet radiation.)

Warning: (Risk of contacting corrosive substances.)

Warning: (Risk of exposure to a toxic substance.)

Warning: (Risk of personal exposure to laser radiation.)

Warning: (Risk of exposure to biological agents that can pose a serious health threat.)

Warning: (Risk of tipping.)

Warning: (Risk of explosion.)

Warning: (Risk of high-pressure gas release.)

A.1.1 Specific warnings

The following warnings (both symbols and text) can appear in the user manuals of particular instruments and devices and on labels affixed to them or their component parts.

A.1.1.1 Burst warning

This warning applies to Waters instruments and devices fitted with nonmetallic tubing.

Warning: To avoid injury from bursting, nonmetallic tubing, heed these precautions when working in the vicinity of such tubing when it is pressurized:

- Wear eye protection.
- Extinguish all nearby flames.
- Do not use tubing that is, or has been, stressed or kinked.
- Do not expose nonmetallic tubing to compounds with which it is chemically incompatible: tetrahydrofuran, nitric acid, and sulfuric acid, for example.
- Be aware that some compounds, like methylene chloride and dimethyl sulfoxide, can cause nonmetallic tubing to swell, significantly reducing the pressure at which the tubing can rupture.

A.1.1.2 Biohazard warning

The following warning applies to Waters instruments and devices that can process material containing biohazards, which are substances that contain biological agents capable of producing harmful effects in humans.

Warning: To avoid infection with potentially infectious, human-sourced products, inactivated microorganisms, and other biological materials, assume that all biological fluids that you handle are infectious.

Specific precautions appear in the latest edition of the US National Institutes of Health (NIH) publication, *Biosafety in Microbiological and Biomedical Laboratories* (BMBL).

Observe Good Laboratory Practice (GLP) at all times, particularly when working with hazardous materials, and consult the biohazard safety representative for your organization regarding the proper use and handling of infectious substances.

A.1.1.3 Biohazard and chemical hazard warning

These warnings apply to Waters instruments and devices that can process biohazards, corrosive materials, or toxic materials.

Warning: To avoid personal contamination with biohazards, toxic materials, or corrosive materials, you must understand the hazards associated with their handling.

Guidelines prescribing the proper use and handling of such materials appear in the latest edition of the National Research Council's publication, *Prudent Practices in the Laboratory: Handling and Management of Chemical Hazards.*

Observe Good Laboratory Practice (GLP) at all times, particularly when working with hazardous materials, and consult the safety representative for your organization regarding its protocols for handling such materials.

A.2 Notices

Notice advisories appear where an instrument or device can be subject to use or misuse that can damage it or compromise a non-clinical sample’s integrity (risks to clinical sample integrity are accompanied by warning symbols). The exclamation point symbol and its associated statement alert you to such risk.

! **Notice:** To avoid damaging the instrument’s case, do not clean it with abrasives or solvents.

A.3 Bottles Prohibited symbol

The Bottles Prohibited symbol alerts you to the risk of equipment damage caused by solvent spills.

Prohibited: To avoid equipment damage caused by spilled solvent, do not place reservoir bottles directly atop an instrument or device or on its front ledge. Instead, place the bottles in the bottle tray, which serves as secondary containment in the event of spills.

A.4 Required protection

The Use Eye Protection and Wear Protective Gloves symbols alert you to the requirement for personal protective equipment. Select appropriate protective equipment according to your organization's standard operating procedures.

Requirement: Use eye protection when refilling or replacing solvent bottles.

Requirement: Wear clean, chemical-resistant, powder-free gloves when handling samples.

A.5 Warnings that apply to all Waters instruments and devices

When operating this device, follow standard quality-control procedures and the equipment guidelines in this section.

Attention: Changes or modifications to this unit not expressly approved by the party responsible for compliance could void the user's authority to operate the equipment.

Important: Toute modification sur cette unité n'ayant pas été expressément approuvée par l'autorité responsable de la conformité à la réglementation peut annuler le droit de l'utilisateur à exploiter l'équipement.

Achtung: Jedwede Änderungen oder Modifikationen an dem Gerät ohne die ausdrückliche Genehmigung der für die ordnungsgemäße Funktionstüchtigkeit verantwortlichen Personen kann zum Entzug der Bedienungsbefugnis des Systems führen.

Avvertenza: qualsiasi modifica o alterazione apportata a questa unità e non espressamente autorizzata dai responsabili per la conformità fa decadere il diritto all'utilizzo dell'apparecchiatura da parte dell'utente.

Atencion: cualquier cambio o modificación efectuado en esta unidad que no haya sido expresamente aprobado por la parte responsable del cumplimiento puede anular la autorización del usuario para utilizar el equipo.

注意：未經有關法規認證部門允許對本設備進行的改變或修改,可能會使使用者喪失操作該設備的權利。

注意：未经有关法规认证部门明确允许对本设备进行的改变或改装，可能会使使用者丧失操作该设备的合法性。

주의: 규정 준수를 책임지는 당사자의 명백한 승인 없이 이 장치를 개조 또는 변경할 경우, 이 장치를 운용할 수 있는 사용자 권한의 효력을 상실할 수 있습니다.

注意：規制機関から明確な承認を受けずに本装置の変更や改造を行うと、本装置のユーザーとしての承認が無効になる可能性があります。

Warning: Use caution when working with any polymer tubing under pressure:

- Always wear eye protection when near pressurized polymer tubing.
- Extinguish all nearby flames.
- Do not use tubing that has been severely stressed or kinked.
- Do not use nonmetallic tubing with tetrahydrofuran (THF) or concentrated nitric or sulfuric acids.
- Be aware that methylene chloride and dimethyl sulfoxide cause nonmetallic tubing to swell, which greatly reduces the rupture pressure of the tubing.

Attention: Manipulez les tubes en polymère sous pression avec precaution:

- Portez systématiquement des lunettes de protection lorsque vous vous trouvez à proximité de tubes en polymère pressurisés.
- Eteignez toute flamme se trouvant à proximité de l’instrument.
- Evitez d'utiliser des tubes sévèrement déformés ou endommagés.
- Evitez d'utiliser des tubes non métalliques avec du tétrahydrofurane (THF) ou de l'acide sulfurique ou nitrique concentré.
- Sachez que le chlorure de méthylène et le diméthylesulfoxyde entraînent le gonflement des tuyaux non métalliques, ce qui réduit considérablement leur pression de rupture.

Vorsicht: Bei der Arbeit mit Polymerschläuchen unter Druck ist besondere Vorsicht angebracht:

- In der Nähe von unter Druck stehenden Polymerschläuchen stets Schutzbrille tragen.
- Alle offenen Flammen in der Nähe löschen.
- Keine Schläuche verwenden, die stark geknickt oder überbeansprucht sind.
- Nichtmetallische Schläuche nicht für Tetrahydrofuran (THF) oder konzentrierte Salpeter- oder Schwefelsäure verwenden.

Durch Methylenchlorid und Dimethylsulfoxid können nichtmetallische Schläuche quellen; dadurch wird der Berstdruck des Schlauches erheblich reduziert.

Attenzione: fare attenzione quando si utilizzano tubi in materiale polimerico sotto pressione:

- Indossare sempre occhiali da lavoro protettivi nei pressi di tubi di polimero pressurizzati.
- Spegnere tutte le fiamme vive nell'ambiente circostante.
- Non utilizzare tubi eccessivamente logorati o piegati.
- Non utilizzare tubi non metallici con tetraidrofurano (THF) o acido solforico o nitrico concentrati.
- Tenere presente che il cloruro di metilene e il dimetilsolfossido provocano rigonfiamenti nei tubi non metallici, riducendo notevolmente la pressione di rottura dei tubi stessi.

Advertencia: se recomienda precaución cuando se trabaje con tubos de polímero sometidos a presión:

- El usuario deberá protegerse siempre los ojos cuando trabaje cerca de tubos de polímero sometidos a presión.
- Si hubiera alguna llama las proximidades.
- No se debe trabajar con tubos que se hayan doblado o sometido a altas presiones.
- Es necesario utilizar tubos de metal cuando se trabaje con tetrahidrofurano (THF) o ácidos nítrico o sulfúrico concentrados.

Hay que tener en cuenta que el cloruro de metileno y el sulfóxido de dimetilo dilatan los tubos no metálicos, lo que reduce la presión de ruptura de los tubos.

警告：當在有壓力的情況下使用聚合物管線時，小心注意以下幾點。

- 當接近有壓力的聚合物管線時一定要戴防護眼鏡。
- 熄滅附近所有的火焰。
- 不要使用已經被壓癟或嚴重彎曲管線。
- 不要在非金屬管線中使用四氫呋喃或濃硝酸或濃硫酸。

要了解使用二氯甲烷及二甲基亞楓會導致非金屬管線膨脹，大大降低管線的耐壓能力。

警告：当有压力的情况下使用管线时，小心注意以下几点：

- 当接近有压力的聚合物管线时一定要戴防护眼镜。
- 熄灭附近所有的火焰。
- 不要使用已经被压瘪或严重弯曲的管线。
- 不要在非金属管线中使用四氢呋喃或浓硝酸或浓硫酸。

要了解使用二氯甲烷及二甲基亚枫会导致非金属管线膨胀，大大降低管线的耐压能力。

경고: 가압 폴리머 튜브로 작업할 경우에는 주의하십시오.

- 가압 폴리머 튜브 근처에서는 항상 보호 안경을 착용하십시오.
- 근처의 화기를 모두 끄십시오.
- 심하게 변형되거나 꼬인 튜브는 사용하지 마십시오.
- 비금속(Nonmetallic) 튜브를 테트라히드로푸란(Tetrahydrofuran: THF) 또는 농축 질산 또는 황산과 함께 사용하지 마십시오.

염화 메틸렌 (Methylene chloride) 및 디메틸술폭시드 (Dimethyl sulfoxide) 는 비금속 튜브를 부풀려 튜브의 파열 압력을 크게 감소시킬 수 있으므로 유의하십시오 .

警告：圧力のかかったポリマーチューブを扱うときは、注意してください。

- 加圧されたポリマーチューブの付近では、必ず保護メガネを着用してください。
- 近くにある火を消してください。
- 著しく変形した、または折れ曲がったチューブは使用しないでください。
- 非金属チューブには、テトラヒドロフラン(THF)や高濃度の硝酸または硫酸などを流さないでください。

塩化メチレンやジメチルスルホキシドは、非金属チューブの膨張を引き起こす場合があり、その場合、チューブは極めて低い圧力で破裂します。

Warning: The user shall be made aware that if the equipment is used in a manner not specified by the manufacturer, the protection provided by the equipment may be impaired.

Attention: L'utilisateur doit être informé que si le matériel est utilisé d'une façon non spécifiée par le fabricant, la protection assurée par le matériel risque d'être défectueuses.

Vorsicht: Der Benutzer wird darauf aufmerksam gemacht, dass bei unsachgemäßer Verwendung des Gerätes die eingebauten Sicherheitseinrichtungen unter Umständen nicht ordnungsgemäß funktionieren.

Attenzione: si rende noto all'utente che l'eventuale utilizzo dell'apparecchiatura secondo modalità non previste dal produttore può compromettere la protezione offerta dall'apparecchiatura.

Advertencia: el usuario deberá saber que si el equipo se utiliza de forma distinta a la especificada por el fabricante, las medidas de protección del equipo podrían ser insuficientes.

警告：使用者必須非常清楚如果設備不是按照製造廠商指定的方式使用，那麼該設備所提供的保護將被消弱。

警告：使用者必须非常清楚如果设备不是按照制造厂商指定的方式使用，那么该设备所提供的保护将被削弱。

경고 : 제조업체가 명시하지 않은 방식으로 장비를 사용할 경우 장비가 제공하는 보호 수단이 제대로 작동하지 않을 수 있다는 점을 사용자에게 반드시 인식시켜야 합니다.

警告： ユーザーは、製造元により指定されていない方法で機器を使用すると、機器が提供している保証が無効になる可能性があることに注意して下さい。

A.6 Warnings that address the replacing of fuses

The following warnings pertain to instruments and devices equipped with user-replaceable fuses. Information describing fuse types and ratings sometimes, but not always, appears on the instrument or device.

Finding fuse types and ratings when that information appears on the instrument or device

Warning: To protect against fire, replace fuses with those of the type and rating printed on panels adjacent to instrument fuse covers.

Attention: pour éviter tout risque d'incendie, remplacez toujours les fusibles par d'autres du type et de la puissance indiqués sur le panneau à proximité du couvercle de la boite à fusible de l'instrument.

Vorsicht: Zum Schutz gegen Feuer die Sicherungen nur mit Sicherungen ersetzen, deren Typ und Nennwert auf den Tafeln neben den Sicherungsabdeckungen des Geräts gedruckt sind.

Attenzione: per garantire protezione contro gli incendi, so8stituire i fusibili con altri dello stesso tipo aventi le caratteristiche indicate sui pannelli adiacenti alla copertura fusibili dello strumento.

Advertencia: Para evitar incendios, sustituir los fusibles por aquellos del tipo y características impresos en los paneles adyacentes a las cubiertas de los fusibles del instrumento.

警告 ：為了避免火災，更換保險絲時，請使用與儀器保險絲蓋旁面板上所印刷之相同類型與規格的保險絲。

警告：为了避免火灾，应更换与仪器保险丝盖旁边面板上印刷的类型和规格相同的保险丝。

경고 : 화재의 위험을 막으려면 기기 퓨즈 커버에 가까운 패널에 인쇄된 것과 동일한 타입 및 정격의 제품으로 퓨즈를 교체하십시오 .

警告：火災予防のために、ヒューズ交換では機器ヒューズカバー脇のパネルに記載されているタイプおよび定格のヒューズをご使用ください。

Finding fuse types and ratings when that information does not appear on the instrument or device

Warning: To protect against fire, replace fuses with those of the type and rating indicated in the “Replacing fuses” section of the Maintenance Procedures chapter.

Attention: pour éviter tout risque d'incendie, remplacez toujours les fusibles par d'autres du type et de la puissance indiqués dans la rubrique "Remplacement des fusibles" du chapitre traitant des procédures de maintenance.

Vorsicht: Zum Schutz gegen Feuer die Sicherungen nur mit Sicherungen ersetzen, deren Typ und Nennwert im Abschnitt "Sicherungen ersetzen" des Kapitels "Wartungsverfahren" angegeben sind.

Attenzione: per garantire protezione contro gli incendi, sostituire i fusibili con altri dello stesso tipo aventi le caratteristiche indicate nel paragrafo "Sostituzione dei fusibili" del capitolo "Procedure di manutenzione".

Advertencia: Para evitar incendios, sustituir los fusibles por aquellos del tipo y características indicados en la sección "Sustituir fusibles".

警告 ：為了避免火災，更換保險絲時，應使用「維護步驟」章節中「更換保險絲」所指定之相同類型與規格的保險絲。

警告：为了避免火灾，应更换 “ 维护步骤 ” 一章的 “ 更换保险丝 ” 一节中介绍的相同类型和规格的保险丝。

경고 : 화재의 위험을 막으려면 유지관리 절차 단원의 " 퓨즈 교체 " 절에 설명된 것과 동일한 타입 및 정격의 제품으로 퓨즈를 교체하십시오 .

警告： 火災予防のために、ヒューズ交換ではメンテナンス項目の「ヒューズの交換」に記載されているタイプおよび定格のヒューズをご使用ください。

A.7 Electrical and handling symbols

A.7.1 Electrical symbols

The following electrical symbols and their associated statements can appear in instrument manuals and on an instrument’s front or rear panels.

Symbol	Description
	Electrical power on
	Electrical power off
	Standby
	Direct current
	Alternating current
3	Alternating current (3 phase)
	Safety ground
	Frame, or chassis, terminal
	Fuse

Symbol	Description
	Functional ground
	Input
	Output

A.7.2 Handling symbols

The following handling symbols and their associated statements can appear on labels affixed to the packaging in which instruments, devices, and component parts are shipped.

Symbol	Description
	Keep upright!
	Keep dry!
	Fragile!
	Use no hooks!
	Upper limit of temperature

Symbol	Description
	Lower limit of temperature
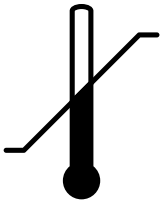	Temperature limitation

B Specifications

This appendix lists individual operating specifications for the 2424 ELS detector.

B.1 Physical specifications

The following table lists the physical specifications for the 2424 ELS detector.

Table B–1: Physical specifications

Attribute	Specification
Width	34.3 cm (13.5 inches)
Height	20.8 cm (8.2 inches)
Depth	61.0 cm (24.0 inches)
Weight	18.6 kg (41.0 pounds)

B.2 Environmental specifications

The following table lists the environmental specifications for the 2424 ELS detector.

Table B–2: Environmental specifications

Attribute	Specification
Operating temperature range	4 to 30 °C (39 to 86 °F)
Operating humidity range	20 to 80%, non-condensing
Operating altitude	≤ 2000 m
Shipping and storage temperature range	-30 to 60 °C (-22 to 140 °F)
Shipping and storage humidity range	20 to 85%, non-condensing
Audible noise (instrument generated)	<58 dBA
Usage location	For indoor use only

B.3 Electrical specifications

The following table lists the electrical specifications for the 2424 ELS detector.

Table B–3: Electrical specifications

Attribute	Specification
Protection class[1]	Class I
Overvoltage category[2]	II
Pollution degree[3]	2
Moisture protection[4]	Normal (IPXO)
⚠ Line voltages, nominal	Grounded ac
Power requirements	100 to 240 Vac ± 10%
Line frequency	50 to 60 Hz
Power consumption	200 VA (nominal)
Fuse	5.00 A

1. **Protection Class I** – The insulating scheme used in the instrument to protect from electrical shock. Class I identifies a single level of insulation between live parts (wires) and exposed conductive parts (metal panels), in which the exposed conductive parts are connected to a grounding system. In turn, this grounding system is connected to the third pin (ground pin) on the electrical power cord plug.
2. **Overvoltage Category II** – Pertains to instruments that receive their electrical power from a local level such as an electrical wall outlet.
3. **Pollution Degree 2** – A measure of pollution on electrical circuits, which may produce a reduction of dielectric strength or surface resistivity. Degree 2 refers only to normally nonconductive pollution. Occasionally, however, expect a temporary conductivity caused by condensation.
4. **Moisture Protection** – Normal (IPXO) – IPXO means that *no* Ingress Protection against any type of dripping or sprayed water exists. The X is a placeholder that identifies protection against dust, if applicable.

B.4 Operational specifications

The following table lists the operational specifications for the 2424 ELS detector.

Table B–4: Operational specifications

Attribute	Specification
Nebulizer: • High-flow rate (standard with detector) • Optional low-flow rate	 300 to 3000 µL/min, gas flow at 1.80 standard liters per minute (L_s/min) at 170 kPa (1.7 bar, 25 psi) 50 to 500 µL/min, gas flow at 0.77 L_s/min at 170 kPa (1.7 bar, 25 psi)
Gas supply	Nitrogen, to be supplied at least 448 kPa (4.5 bar, 65 psi)
Gain setting	0 to 1000
Filter time constant settings	Hamming, 0.0 to 5.0 seconds
Sampling rate	Up to 80 points/s
Measurement range	0.1 to 2000.0 LSU

Table B–4: Operational specifications (Continued)

Attribute	Specification
Two analog outputs[1]	Channel 1 = -0.1 to 2.1 Vdc (selectable maximum data rates are 10, 20, 40, or 80 Hz) Channel 2 = -0.1 to 2.1 Vdc (fixed maximum data rate is 10 Hz)
Four event inputs[2]	Input voltage: ±30 Volts max Low input voltage: <1.7 V High input voltage: >3.2 V
Two event outputs[3]	Type: Contact closure Voltage: ±30 Volts max Current, switching: 0.5 A Current, carry: 1.2 A
Temperature control	Nebulizer heater power: 0 to 100% Nebulizer cooler: Cooling/Off Drift tube heater: Ambient to 100 °C (212 °F)

1. Signal and Auxiliary.
2. Inject Start, Lamp On, Chart Mark, and Auto Zero.
3. One event output is dedicated to Stop Flow.

B.5 Optical component specifications

The following table lists the optical component specifications for the 2424 ELS detector.

Table B–5: Optical component specifications

Attribute	Specification
Optics	Heated optics bench (constant 50 °C)
Light source	Tungsten halogen polychromatic front mounted, pre-aligned, user installable Warranty: 2000 hours or 1 year (whichever comes first)
Photodiode	Energy reference
Detector	Evaporative light scattering signal; photomultiplier tube
Evaporative light scattering optics	Lens relay system
Scattering angle, θ	60 degrees
Wetted materials	316 stainless steel, aluminum, viton, PTFE, FEP, silicone rubber, polyethylene, polyurethane