Waters
THE SCIENCE OF WHAT'S POSSIBLE.™

ACQUITY QDa Detector

Overview and Maintenance Guide

715003956
Version 06 (previously released as Rev. F)

Copyright © Waters Corporation 2021
All rights reserved

General information

Copyright notice

© 2013 – 2021 WATERS CORPORATION. PRINTED IN THE UNITED STATES OF AMERICA AND IN IRELAND. ALL RIGHTS RESERVED. THIS DOCUMENT OR PARTS THEREOF MAY NOT BE REPRODUCED IN ANY FORM WITHOUT THE WRITTEN PERMISSION OF THE PUBLISHER.

The information in this document is subject to change without notice and should not be construed as a commitment by Waters Corporation. Waters Corporation assumes no responsibility for any errors that may appear in this document. This document is believed to be complete and accurate at the time of publication. In no event shall Waters Corporation be liable for incidental or consequential damages in connection with, or arising from, its use. For the most recent revision of this document, consult the Waters website (www.waters.com).

Trademarks

ACQUITY™ is a trademark of Waters Corporation.

Alliance™ is a trademark of Waters Corporation.

POZIDRIV® is a registered trademark of Phillips Screw Company.

QDa™ is a trademark of Waters Corporation.

RADAR™ is a trademark of Waters Corporation.

THE SCIENCE OF WHAT'S POSSIBLE™ is a trademark of Waters Corporation.

Tygon® is a registered trademark of Saint-Gobain Performance Plastics Corporation.

VACUUBRAND® is a registered trademark of VACUUBRAND GMBH + CO KG.

Viton® is a registered trademark of DuPont Performance Elastomers LLC.

Waters™ is a trademark of Waters Corporation.

Waters Quality Parts™ is a trademark of Waters Corporation.

All other trademarks are property of their respective owners.

Customer comments

Waters' Customer Experience and Knowledge Management organization invites you to report any errors that you encounter in this document or to suggest ideas for otherwise improving it.

Help us better understand what you expect from our documentation so that we can continuously improve its accuracy and usability.

We seriously consider every customer comment we receive. You can reach us at tech_comm@waters.com.

Contacting Waters

Contact Waters with enhancement requests or technical questions regarding the use, transportation, removal, or disposal of any Waters product. You can reach us via the Internet, telephone, fax, or conventional mail.

Waters contact information

Contacting medium	Information
Internet	The Waters website includes contact information for Waters locations worldwide. Visit www.waters.com
Telephone and fax	From the USA or Canada, phone 800-252-4752, or fax 508-872-1990. For other locations worldwide, phone and fax numbers appear in the Waters website.
Conventional mail	Waters Corporation Global Support Services 34 Maple Street Milford, MA 01757 USA

Manufacturer information

Manufacturer:

	Waters Corporation 34 Maple Street Milford, MA 01757 USA

Safety considerations

Some reagents and samples used with Waters instruments and devices can pose chemical, biological, or radiological hazards (or any combination thereof). You must know the potentially hazardous effects of all substances you work with. Always follow Good Laboratory Practice (GLP), and consult your organization's standard operating procedures as well as your local requirements for safety.

Safety hazard symbol notice

The symbol indicates a potential hazard. Consult the documentation for important information about the hazard and the appropriate measures to prevent and control the hazard.

Considerations specific to the device

Power cord replacement hazard

Warning: To avoid electric shock, observe these precautions:

- Use SVT-type power cords in the United States and HAR-type power cords, or better, in Europe. For requirements elsewhere, contact your local Waters distributor.
- Do not replace power cords with inadequately rated power cords.
- Inspect the power cords for damage and replace them if necessary.
- Power-off and unplug each module before performing any maintenance operation on it.
- Connect each module to a common ground.

Solvent leakage hazard

The source exhaust system is designed to be robust and leak-tight. Waters recommends that you perform a hazard analysis, assuming a maximum leak into the laboratory atmosphere of 10% LC eluate. If the instrument is a standard QDa fitted with a diaphragm pump, assume an additional 0.5% maximum leak into the laboratory atmosphere.

Warning: To avoid exposure to toxic substances and biohazards from O-ring leaks in the source exhaust system, observe these precautions:

- Replace the source O-rings at intervals not exceeding one year.
- Prevent chemical degradation of the source O-rings, which can withstand exposure only to certain solvents, by determining whether any solvents you use are chemically compatible with the composition of the O-rings.

Flammable solvents hazard

Warning: To prevent the ignition of flammable solvent vapors in the enclosed space of a mass spectrometer's ion source, ensure that these conditions are met:

- Nitrogen flows continuously through the source.
- You have installed a gas-fail device to interrupt the flow of LC solvent should the nitrogen supply fail.
- The nitrogen supply pressure does not fall below 650 kPa (6.5 bar, 94 psi) during an analysis requiring the use of flammable solvents.

High temperature hazard

Warning: To avoid burn injuries, exercise care when handling the components of the source enclosure heated to high temperatures. Wait until the hot components have sufficiently cooled before you handle them.

Mass spectrometer high temperature hazard

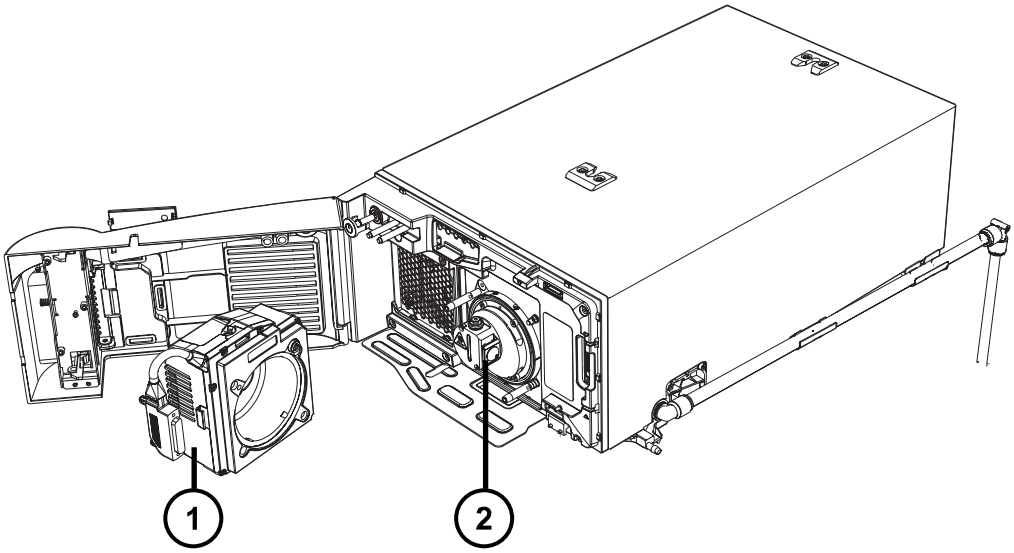

1 Source enclosure

2 Source components

High-voltage hazard

Warning: To avoid electric shock, observe these precautions:

- Do not remove the mass spectrometer's protective panels. The components they cover are not user-serviceable.
- When the instrument is in Operate mode, avoid touching the areas marked with the high voltage warning symbol. To touch external areas marked with the symbol, first put the instrument in Standby mode.

Hazards associated with removing an instrument from service

Warning: To avoid personal contamination with biologically hazardous, toxic, and corrosive materials, wear chemical-resistant, powder-free gloves when performing this procedure.

Warning: To avoid puncture injuries, handle sample needles, syringes, fused silica lines, and borosilicate tips with extreme care.

Warning: To avoid eye injury from broken fused silica lines, use eye protection when performing this procedure.

When you remove the instrument from use to repair or dispose of it, you must decontaminate all of its vacuum areas. These are the areas in which you can expect to encounter the highest levels of contamination:

- Source interior
- Waste tubing
- Exhaust system
- Rotary pump oil (where applicable)

The need to decontaminate other vacuum areas of the instrument depends on the kinds of samples the instrument analyzed and their levels of concentration. Do not dispose of the instrument or return it to Waters for repair until the authority responsible for approving its removal from the premises specifies the extent of decontamination required and the level of residual contamination permissible. That authority must also prescribe the method of decontamination to be used and the appropriate protection for personnel undertaking the decontamination process.

You must handle items such as syringes, fused silica lines, and borosilicate tips used to carry sample into the source area in accordance with laboratory procedures for contaminated vessels and sharps. To avoid contamination by carcinogens, toxic substances, or biohazards, you must wear chemical-resistant gloves when handling or disposing of used oil.

Bottle placement prohibition

Warning: To avoid injury from electrical shock or fire, and damage to the equipment, follow these guidelines:

- Do not expose the workstation or ancillary equipment to dripping or splashing liquids.
- Do not place objects filled with liquid, such as solvent bottles, on top of the workstation or ancillary equipment.

Electrical power safety notice

Do not position the device so that it is difficult to disconnect the power cord.

Equipment misuse notice

If equipment is used in a manner not specified by its manufacturer, the protection provided by the equipment may be impaired.

Safety advisories

Consult the "Safety advisories" appendix in this publication for a comprehensive list of warning advisories and notices.

Operating the device

When operating the device, follow standard quality-control (QC) procedures and the guidelines presented in this section.

Applicable symbols

The following symbols can be present on the device, system, or packaging.

Symbol	Definition
	Manufacturer
	Date of manufacture
	Confirms that a manufactured product complies with all applicable European Community directives
	Australia EMC compliant

Symbol	Definition
	Confirms that a manufactured product complies with all applicable United States and Canadian safety requirements
	Environmentally friendly use period (China RoHS): indicates the number of years from the date of manufacture until the product, or components within the product, are likely to be discarded or degrade into the environment
	Consult instructions for use
	Alternating current
	Electrical and electronic equipment with this symbol may contain hazardous substances and should not be disposed of as general waste For compliance with the Waste Electrical and Electronic Equipment Directive (WEEE) 2012/19/EU, contact Waters Corporation for the correct disposal and recycling instructions
	For indoor use only
	No pushing
	Indicates the maximum load you can place on that item (for example, 10kg)
SN	Serial number
REF	Part number, catalog number

Audience and purpose

This guide is for novice users and assumes no knowledge of liquid chromatography or mass spectrometry principles. It provides an overview of the instrument and explains how to install it, prepare it for operation, and maintain it.

Intended use of the ACQUITY QDa detector

Waters designed the ACQUITY QDa detector for use as an ion confirmation and quantitation tool, as part of an ACQUITY UPLC or UPC² system, Alliance, and LC and SFC prep systems. The ACQUITY QDa detector is not intended for use in diagnostic applications.

Calibrating

To calibrate LC systems, adopt acceptable calibration methods using at least five standards to generate a standard curve. The concentration range for standards must include the entire range of QC samples, typical specimens, and atypical specimens.

Quality control

Routinely run three QC samples that represent subnormal, normal, and above-normal levels of a compound. If sample trays are the same or very similar, vary the location of the QC samples in the trays. Ensure that QC sample results fall within an acceptable range, and evaluate precision from day to day and run to run. Data collected when QC samples are out of range might not be valid. Do not report these data until you are certain that the instrument performs satisfactorily.

EMC considerations

FCC radiation emissions notice

Changes or modifications not expressly approved by the party responsible for compliance, could void the user's authority to operate the equipment. This device complies with Part 15 of the FCC Rules. Operation is subject to the following two conditions: (1) this device may not cause harmful interference, and (2) this device must accept any interference received, including interference that may cause undesired operation.

Canada spectrum management emissions notice

This class A digital product apparatus complies with Canadian ICES-001.

Cet appareil numérique de la classe A est conforme à la norme NMB-001.

ISM classification: ISM group 1 class A

This classification has been assigned in accordance with CISPR 11 Industrial Scientific and Medical (ISM) instruments requirements.

Group 1 products apply to intentionally generated and/or used conductively coupled radio-frequency energy that is necessary for the internal functioning of the equipment.

Class A products are suitable for use in all establishments other than residential locations and those directly connected to a low voltage power supply network supplying a building for domestic purposes.

There may be potential difficulties in ensuring electromagnetic compatibility in other environments due to conducted as well as radiated disturbances.

EMC emissions

Do not use the equipment in close proximity to sources of strong electromagnetic radiation (for example, unshielded intentional RF sources). The radiation can interfere with the equipment's proper operation.

This equipment complies with the emission and immunity requirements described in the relevant parts of IEC/EN 61326: Electrical equipment for measurement, control, and laboratory use — EMC requirements.

Safe disposal

Contact recycling@waters.com with any questions or concerns regarding the proper handling or disposal.

Dispose of Waters instrumentation products in accordance with applicable requirements and best practices as described below.

- Follow appropriate procedures for flushing the instrument's fluid paths of any hazardous samples or solvents.
- Waters instruments are subject to European Union's Waste Electrical and Electronic Equipment (WEEE) and Restriction of Hazardous Substances (RoHS) Directives. According to these directives, do not dispose of instruments in the general waste stream. Similar "e-waste" laws also apply in other jurisdictions. In all cases, ensure that a certified electronics recycler processes end-of-life instruments.
- Some Waters instruments use batteries, mercury-containing lamps, or other replaceable components during the life span of the instrument. Handle such materials in accordance with local laws governing their processing and safe disposal.

Table of contents

General information ii

Copyright notice ii

Trademarks ii

Customer comments ii

Contacting Waters iii

Manufacturer information iii

Safety considerations iv
- Safety hazard symbol notice iv
- Considerations specific to the device iv
- Electrical power safety notice vii
- Equipment misuse notice vii
- Safety advisories vii

Operating the device vii
- Applicable symbols vii
- Audience and purpose viii
- Intended use of the ACQUITY QDa detector ix
- Calibrating ix
- Quality control ix

EMC considerations ix
- FCC radiation emissions notice ix
- Canada spectrum management emissions notice ix
- ISM classification: ISM group 1 class A ix
- EMC emissions x

Safe disposal x

1 ACQUITY QDa Detector Overview 16

1.1 ACQUITY QDa Detector Front Panel Overview 16

1.2 Instrument LEDs 17

2 Instrument features and operating modes 19

2.1 Operating modes 19

2.2 Ion optics..... 19

2.3 Auto setup..... 19

2.4 Sample inlet..... 20

2.5 Vacuum system..... 20

2.6 ACQUITY Diverter Valve..... 20

2.7 Identifying your instrument version..... 21

3 Maintenance procedures..... 23

3.1 Maintenance schedule..... 23

3.2 Spare parts..... 24

3.3 Replacing fuses..... 24

3.4 Safety and handling..... 25

3.5 Preparing the instrument for working on the source..... 26

3.6 Removing and refitting the source enclosure..... 26
- 3.6.1 Removing the source enclosure from the instrument..... 26
- 3.6.2 Fitting the source enclosure to the instrument..... 27

3.7 Replacing or refitting the source enclosure O-ring..... 28

3.8 Replacing the entrance-aperture seal and disc..... 29

3.9 Cleaning the source components..... 32
- 3.9.1 Removing the ion block, the calibration pin, and the entrance-aperture carrier..... 32
- 3.9.2 Cleaning the source components..... 36
- 3.9.3 Refitting the source components..... 38

3.10 Cleaning the ion guide assembly..... 38
- 3.10.1 Removing the ion guide assembly from the source assembly..... 39
- 3.10.2 Cleaning the differential aperture..... 42
- 3.10.3 Cleaning the ion guide assembly..... 43
- 3.10.4 Fitting the ion guide assembly to the instrument..... 45

3.11 Replacing the source enclosure..... 48

3.12 Replacing the probe capillary assembly..... 50

3.13 Cleaning the instrument case..... 52

3.14 Emptying the nitrogen exhaust trap....53

3.15 Emptying the liquid trap bottle....54

3.16 Maintaining the rotary backing pump's oil....55

3.17 Gas ballasting the rotary backing pump....57

3.18 Replacing the rotary backing pump's demister element....57

3.19 Replacing the internal source exhaust valve (KAD)....58
3.19.1 Removing the source exhaust valve....59
3.19.2 Fitting the source exhaust valve....60

A Safety advisories....63

A.1 Warning symbols....63
A.1.1 Specific warnings....64

A.2 Notices....66

A.3 Bottles Prohibited symbol....66

A.4 Required protection....66

A.5 Warnings that apply to all Waters instruments and devices....67

A.6 Warnings that address the replacement of fuses....71

A.7 Electrical and handling symbols....72
A.7.1 Electrical symbols....72
A.7.2 Handling symbols....73

B Preparing the system for operation....75

B.1 Rear panel connections....75

B.2 Connecting the probe....75

B.3 Connecting to the electricity source....76

B.4 Starting the instrument....77

B.5 Stop flow....78

C Specifications....79

C.1 Physical specifications....79

C.2 Environmental specifications..... 79

C.3 Electrical specifications.....79

C.4 Input/output specifications..... 80

D Materials of construction and compatible solvents..... 82

D.1 Preventing contamination..... 82

D.2 Running Hexane and THF with the ACQUITY QDa Detector.....83

D.3 QDa solvent compatibility (KAD)..... 83
D.3.1 Items exposed to solvent.....84
D.3.2 Solvents used to prepare mobile phases..... 84
D.3.3 Solvents used infrequently..... 85
D.3.4 Solvents used commonly as diluents..... 86

D.4 QDa solvent compatibility (KAB) 86
D.4.1 Items exposed to solvent.....87
D.4.2 Solvents used to prepare mobile phases..... 88

E External connections..... 90

E.1 External wiring and vacuum connections.....90

E.2 Connecting the Standard instrument's backing pump..... 92

E.3 Connecting the Performance instrument's backing pump..... 92
E.3.1 Making the electrical connections to the rotary backing pump.....96

E.4 Connecting to the nitrogen gas supply.....97

E.5 Connecting and disconnecting the external source exhaust valve assembly (KAB)..... 98
E.5.1 Connecting the external source exhaust valve assembly (KAB).....98
E.5.2 Disconnecting the external source exhaust valve assembly..... 100

E.6 Connecting and disconnecting the internal source exhaust valve assembly (KAD)..... 101
E.6.1 Connecting the internal source exhaust valve.....101
E.6.2 Disconnecting the internal source exhaust valve..... 103

E.7 Source exhaust tubing 104
E.7.1 Connecting the exhaust-trap bottle.....104
E.7.2 Alternate configurations.....108
E.7.3 Connecting the 2.5-L waste container..... 111

E.8 Connecting the nitrogen exhaust line.....114

E.8.1 Connecting the exhaust solenoid cable..... 115

E.9 Connecting the workstation..... 116
E.9.1 Connecting to the workstation:..... 117
E.9.2 Connecting the instrument to the power source:..... 117

E.10 Input/output signal connectors..... 117
E.10.1 Signal connections..... 118

E.11 Connecting to the power supply..... 120

F Optional ACQUITY Diverter Valve..... 121

F.1 Diverter valve safety advisories..... 121

F.2 Installing the ACQUITY Diverter Valve..... 121
F.2.1 Fitting the diverter valve assembly..... 121
F.2.2 Diverter valve wiring..... 126
F.2.3 Configuring the diverter valve fluidics 128
F.2.4 Configuring the diverter valve waste tubing..... 131

F.3 Operating the ACQUITY Diverter Valve..... 132
F.3.1 Programming the diverter valve for operation..... 132
F.3.2 Manually operating the diverter valve..... 133
F.3.3 Injecting sample and manually actuating the diverter valve..... 134

F.4 Diverter valve maintenance procedures..... 135
F.4.1 Cleaning the diverter valve..... 135
F.4.2 Replacing the diverter valve components..... 137

F.5 Removing the diverter valve assembly..... 140

1 ACQUITY QDa Detector Overview

The ACQUITY QDa Detector is a single quadrupole mass detector with an ESI source and is intended for use as an analytical tool. It provides nominal mass data with minimal user interaction.

1.1 ACQUITY QDa Detector Front Panel Overview

Figure 1–1: ACQUITY QDa with the instrument door closed

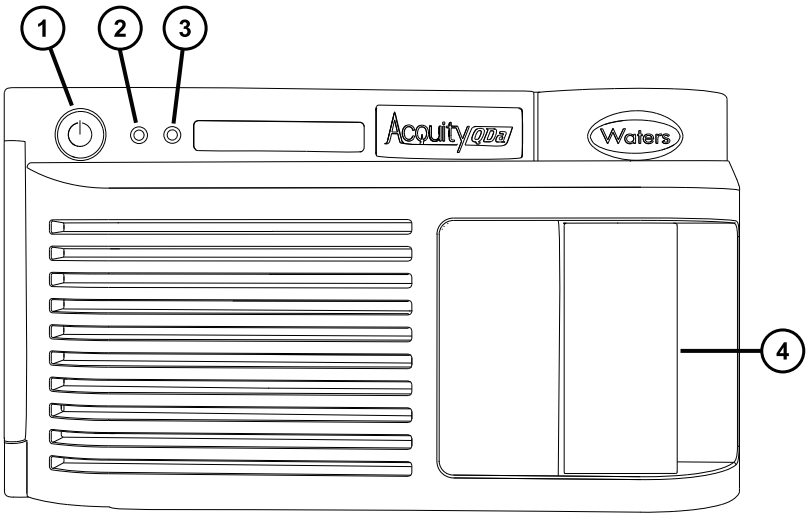

1. Power button
2. Power LED
3. Status LED
4. Instrument door handle

Figure 1–2: ACQUITY QDa with the instrument door open

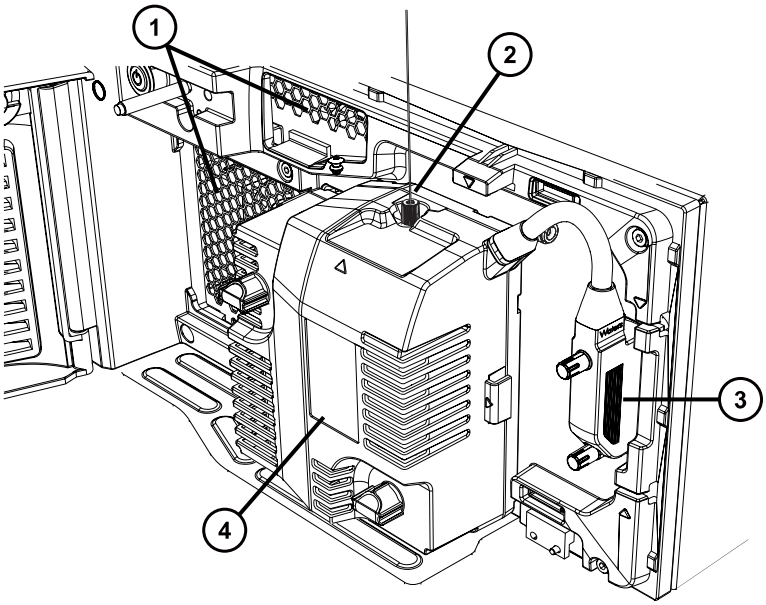

1. Air filter
2. Probe capillary connection at source
3. Source enclosure's electrical cable socket
4. Source enclosure

1.2 Instrument LEDs

The Power and Status LEDs on the front panel provide information about the instrument's activity.

Table 1–1: Power LED

Color	Firmware revision	Description
Green	T, U, V	The DC power supply is on and supplying power and the EPC started correctly.
Off	T, U, V	Either the instrument is powered-off or there is a problem with the power supply.

Table 1–2: Status LED

Color	Firmware revision	Description
Orange	T, U, V	The firmware is starting.
Orange (flashing quickly)	T, U, V	The instrument is pumping down and the EPC is starting.
Orange (flashing slowly)	T, U, V	The instrument failed to start properly.
Red (flashing)	T	The EPC started correctly but the health checks have failed.
Red	T, U, V	There is a fault. To rectify, power-cycle the instrument.
Green (flashing)	U, V	The source pressure test or self-check is in progress. The EPC is starting.
Green	T, U, V	The instrument is in Operate mode and is ready to acquire data.
Off	T, U, V	The instrument is in Standby mode.

Tip: To identify your firmware revision, in the Console, click Configure, and then click "View module information".

2 Instrument features and operating modes

To effectively use the ACQUITY QDa Detector, you must familiarize yourself with its features and operating modes.

2.1 Operating modes

You can acquire data using any of the following operating modes:

- Scanning, where the instrument scans across a user-defined span of mass-to-charge (*m/z*) ratios to produce a mass spectrum.
- Selected ion recording (SIR), where the instrument records the signal intensity at a static *m/z* ratio for the purpose of quantitation. Multiple *m/z* ratios can be recorded simultaneously.
- RADAR, where the instrument performs Scanning and SIR acquisitions simultaneously.

Important: Do not open the instrument's front door during data acquisition. Doing so cancels the acquisition.

2.2 Ion optics

Ions flow through the instrument in the following sequence:

1. Samples from the LC are introduced into the ionization source.
2. The ions pass through the sample cone into the vacuum system.
3. The ions pass through the transfer optics (the ion guides) to the quadrupole, where they are filtered according to their *m/z* ratios.
4. The transmitted ions are detected by the photomultiplier detection system.
5. The signal is amplified, digitized, and sent to the software for analysis.

2.3 Auto setup

The instrument can perform auto setup checks when it powers-on. If auto setup is enabled, the instrument performs a start-up check of mass scale calibration and quadrupole (spectrum) resolution, using an internal calibrant during start-up. If the instrument reports no problems, the

status LED shows green and the instrument is ready for use. If the check identifies a problem, the software prompts you to start an automatic correction process. You can also inspect the quadrupole resolution and mass scale calibration on demand without powering-off the instrument.

To learn how to enable start-up checks, see the instrument's online Help.

2.4 Sample inlet

You can introduce sample into the QDa detector from an ACQUITY LC system or from a syringe pump.

If you are using an LC system, connect the ACQUITY QDa detector to the preceding instrument in your system using the supplied probe assembly. You can use 250-mm or 500-mm probe assemblies, whichever best suits your configuration. If required, use a union to extend the length to fit with your configuration.

Notice: To avoid damage to the instrument, do not exceed a flow rate of 2 mL/min.

If you are using a syringe pump, connect the QDa detector's probe assembly directly to the syringe pump.

Recommendation: Where possible, use the 250-mm PEEK tubing. Doing so minimizes band broadening.

Notice: To avoid the pressure exceeding the limits of the preceding instrument, ensure that you use the recommended tubing size and lengths for your instrument.

2.5 Vacuum system

An internal turbomolecular pump and external backing pump create the instrument's vacuum. The Performance instrument uses a separate rotary vane backing pump, and the Standard instrument uses a diaphragm pump attached to the back of the instrument.

Vacuum leaks, electrical failures, and vacuum pump failures cause vacuum loss, the damage from which is prevented by protective interlocks. The system monitors turbomolecular pump speed and continuously measures turbo power. The turbo speed also serves as a switch, stopping operation when it senses vacuum loss.

2.6 ACQUITY Diverter Valve

The ACQUITY Diverter Valve is supplied as an optional accessory to the ACQUITY QDa Detector. The diverter valve is used to divert column eluent from the QDa to waste when handling variable samples and solutions, and can also support sample loop injections. You can attach the

diverter valve to the QDa instrument using the bracket assembly supplied with the diverter valve kit.

See also: Optional ACQUITY diverter valve (Page 121)

2.7 Identifying your instrument version

The information and procedures in this guide include variations based on the model of the QDa you are operating and maintaining. The following table and figures include some basic details to help you identify your instrument and to refer to the appropriate information for your version and model.

Table 2–1: Instrument versions

Serial number suffix	Models	Backing pump	Source exhaust
KAD or KBD	Performance	Rotary (external)	Internal valve
KAD or KBD	Standard	Diaphragm (attached)	Internal valve
KAA or KAB	Performance	Rotary (external)	External valve
KAA or KAB	Standard	Diaphragm (attached)	External valve

Figure 2–1: QDa with internal source exhaust (KAD version)

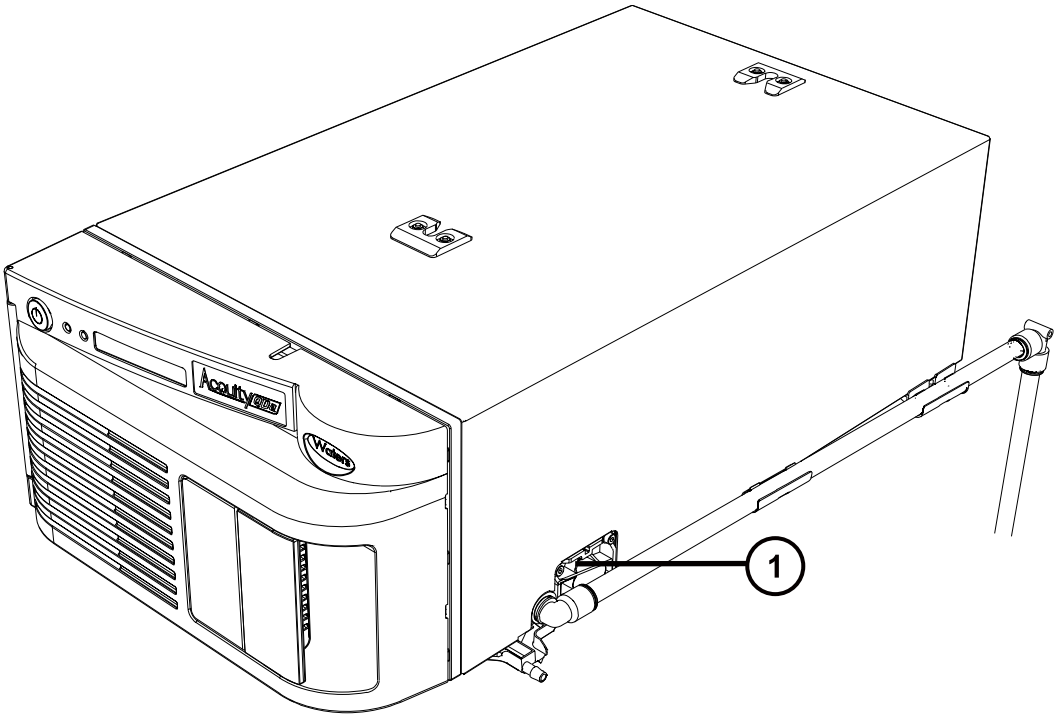

1 QDa with internal source exhaust (KAD version)

See also: Maintenance Procedures (Page 23)
External Connections (Page 90)

Figure 2–2: QDa with external source exhaust (KAB version)

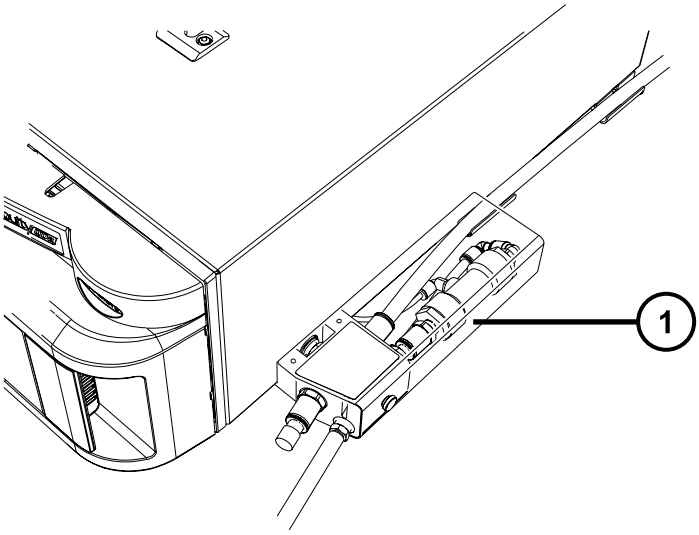

1 QDa with external source exhaust (KAB version)

Note: In the figure, the assembly cover is depicted as transparent to reveal the tubing connections.

See also: Maintenance Procedures (Page 23)
External Connections (Page 90)

3 Maintenance procedures

This section provides the maintenance guidelines and procedures necessary to maintain the device's performance.

Keep to a maintenance schedule, and perform maintenance as required and described in this section.

3.1 Maintenance schedule

The following table lists periodic maintenance schedules that ensure optimum instrument performance.

The maintenance frequencies shown apply to instruments that normally receive moderate use.

Table 3–1: Maintenance schedule

Procedure	Frequency	Additional information
Clean the instrument case.	As required.	See Cleaning the instrument case (Page 52).
Empty the exhaust trap bottle in the instrument exhaust line.	Check daily, empty as required.	See Emptying the nitrogen exhaust trap bottle (Page 53).
Empty the liquid trap bottle in the backing pump exhaust line.	Check daily, empty as required.	See Emptying the liquid-trap bottle (Page 54).
Gas ballast the rotary backing pump. (Performance QDa only.)	Weekly.	See Gas ballasting the rotary backing pump (Page 57).
Inspect and adjust the rotary backing pump's oil level. (Performance QDa only.)	Weekly.	See Maintaining the rotary backing pump’s oil (Page 55).
Change the rotary backing pump oil. (Performance QDa only.)	Annually.	See Maintaining the rotary backing pump’s oil (Page 55).
Clean the source components.	When sensitivity decreases to unacceptable levels.	See Cleaning the source components (Page 32).
Clean the ion guide assembly	When sensitivity decreases to unacceptable levels.	See Cleaning the ion guide assembly (Page 38)
Replace the probe capillary assembly.	When sensitivity decreases to unacceptable levels.	See Replacing the probe capillary assembly (Page 50).

Table 3–1: Maintenance schedule (continued)

Procedure	Frequency	Additional information
Replace the ion block heater cartridge.	If the heater fails to heat when the instrument is pumped down (evacuated).	This task must be performed by a Waters field service engineer. (See Waters contact information (Page iii)).
Replace the rotary backing pump's demister element. (Performance QDa only.)	Annually. **Note:** Applications that contaminate the rotary backing pump oil reduce this period and must be determined from experience.	See Replacing the rotary backing pump's demister element (Page 57).
Replace the internal source exhaust valve. (Serial number suffix KAD only.)	Annually, or when the source pressure test fails and all other causes of failure have been investigated.	See Replacing the internal, source exhaust valve (KAD) (Page 58).
Clean the diverter valve or replace its components.	Clean the valve when performance reduces to unacceptable levels and replace components if they become irretrievably damaged.	See Diverter valve maintenance procedures (Page 135).

3.2 Spare parts

To ensure that your system operates as designed, use only Waters Quality Parts. Visit www.waters.com/wqp for information about Waters Quality Parts, including how to order them.

3.3 Replacing fuses

Warning: To avoid electrical fire, ensure that replacement fuses comply with the ratings affixed to the rear panel of the module.

Warning: To avoid electric shock, disconnect the mass spectrometer from the power supply before replacing fuses. The mass spectrometer has two fuses and uses double pole/neutral fusing circuitry. Circuits can remain live even when one fuse has blown.

If either of the instrument's fuses, located on the rear panel, rupture or become otherwise faulty, replace it with a fuse of this type and rating.

Table 3–2: Fuse information

Location	Size	Type	Current rating	Rupture capacity	Voltage rating
Rear panel	5 × 20 mm	T	8 A	H	250 V

3.4 Safety and handling

Be aware of the following safety considerations when performing maintenance procedures:

Warning: To avoid personal contamination with biologically hazardous or toxic compounds, wear clean, chemical-resistant, powder-free gloves when performing this procedure.

Warning: To prevent personal injury, always observe Good Laboratory Practice when handling solvents, changing tubing, or operating the detector. Know the physical and chemical properties of the solvents used (see the Safety Data Sheets for the solvents in use).

Warning: To avoid electric shock, observe these precautions:

- Do not remove the mass spectrometer's protective panels. The components they cover are not user-serviceable.
- When the instrument is in Operate mode, avoid touching the areas marked with the high voltage warning symbol. To touch external areas marked with the symbol, first put the instrument in Standby mode.

Warning: To avoid burn injuries, take great care while working with the probe and source; these components can be hot.

Warning: To avoid injury, ensure that these criteria are met when performing maintenance operations inside the source enclosure:

- The instrument is in Standby mode.
- LC flow is diverted to waste or set to Off.
- Desolvation gas flow is stopped.

See Appendix A (Page 63) for safety advisory information.

3.5 Preparing the instrument for working on the source

For safety reasons, you must, depending on the maintenance task, either put the instrument into Standby mode or turn the instrument off before you perform any maintenance on the source. The following procedures instruct you on what you need to do and when.

3.6 Removing and refitting the source enclosure

Remove the source enclosure to gain access to the source components that need routine cleaning and replacement.

3.6.1 Removing the source enclosure from the instrument

Required materials

- Chemical-resistant, powder-free gloves

Warning: To avoid personal contamination with biologically hazardous or toxic compounds, wear clean, chemical-resistant, powder-free gloves when performing this procedure.

Notice: To avoid damaging the fragile probe, use care when removing it from the source enclosure.

Warning: To avoid puncture injuries from the sharp ESI capillary, use care when inserting and removing the probe from the source enclosure.

Warning: To avoid burn injuries, exercise care when handling the components of the source enclosure heated to high temperatures. Wait until the hot components have sufficiently cooled before you handle them.

To remove the source enclosure:

1. In the software, click **Standby** to put the instrument into Standby mode.

   Warning: To avoid injury, do not remove the ion block, sample cone assembly, entrance-aperture carrier, calibration pin, or source ion guide when the instrument is in Standby mode. To remove these components, you must power-off the instrument and wait five minutes for it to vent. Power-off the instrument by pressing the power button on the instrument's front panel.

2. Open the instrument door.

Figure 3–1: Removing the source enclosure

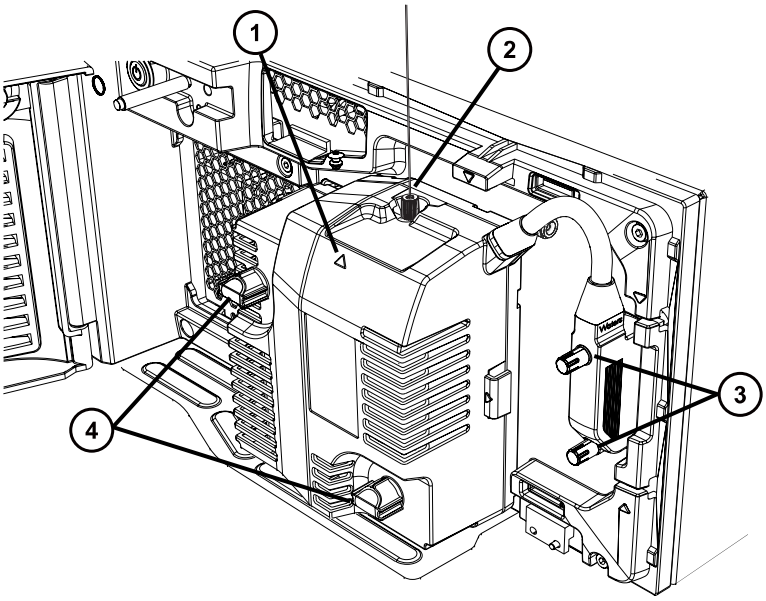

1. Source enclosure
2. Probe capillary connection at source
3. Cable screws
4. Source enclosure thumbscrews

3. Disconnect the probe capillary from the LC system.
4. Disconnect the source enclosure's electrical cable from the front of the instrument by loosening the screws and pulling the cable from the socket.
5. Loosen the two thumbscrews on the front of the source enclosure.
6. Remove the source enclosure by pulling it away from the instrument using both hands, and then place it on a flat surface.

3.6.2 Fitting the source enclosure to the instrument

Required materials

- Chemical-resistant, powder-free gloves

Warning: To avoid personal contamination with biologically hazardous or toxic compounds, wear clean, chemical-resistant, powder-free gloves when performing this procedure.

To fit the source enclosure:

1. Use both hands to slide the source enclosure onto the instrument's supporting rods.

   Notice: To avoid damage to the source enclosure's screws, do not overtighten them.

2. To secure the enclosure against the instrument, tighten the two thumbscrews on the front of the source enclosure.

   Notice: To avoid damage to the electrical connector's screws, do not overtighten them.

3. Connect the electrical cable to the socket on the right-hand side of the instrument's front panel and tighten the screws.
4. Close the instrument door, ensuring that the capillary is fitted through the notch at the top of the instrument door.
5. In the software, click **Operate** to put the instrument into Operate mode.

   Note: If the instrument is powered-off, power it on (see Starting the instrument (Page 77)).

3.7 Replacing or refitting the source enclosure O-ring

If the source pressure test fails, inspect the source enclosure O-ring to ensure that it is fitted correctly and not damaged.

Required tools and materials

- Chemical-resistant, powder-free gloves
- O-ring removal tool

Warning: To avoid personal contamination with biologically hazardous or toxic compounds, wear clean, chemical-resistant, powder-free gloves when performing this procedure.

Warning: To avoid burn injuries, allow the ion block to cool before performing this procedure.

Important: Ensure that the instrument is in Standby mode before performing this procedure.

To replace or refit the source enclosure O-ring:

1. Remove the source enclosure from the instrument (see Removing the source enclosure from the instrument (Page 26)).
2. Inspect the source enclosure O-ring and ensure that it is fitted correctly and undamaged.

Figure 3–2: The source enclosure O-ring

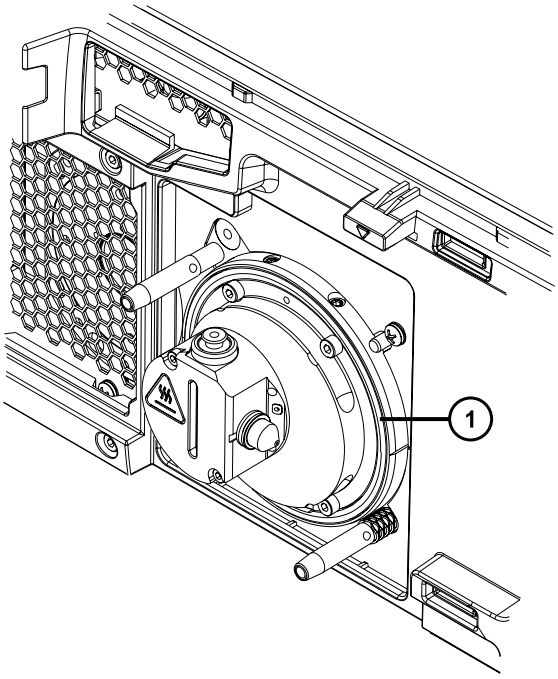

(1) Source enclosure O-ring

3. If the O-ring is fitted incorrectly, remove and then refit the O-ring.
4. If the O-ring is damaged, remove it, and then fit a replacement O-ring.
5. Fit the source enclosure to the instrument (see Fitting the source enclosure to the instrument (Page 27)).

3.8 Replacing the entrance-aperture seal and disc

Replace the entrance seal aperture when the following conditions apply:

- You have dismissed LC and sample-related causes for decreased signal intensity.
- Cleaning the source components fails to increase signal stability.

Required materials

- New entrance-aperture seal and entrance-aperture disc
- Chemical-resistant, powder-free gloves
- O-ring removal tool

Warning: To avoid personal contamination with biologically hazardous or toxic compounds, wear clean, chemical-resistant, powder-free gloves when performing this procedure.

Warning: To avoid burn injuries, allow the ion block to cool before performing this procedure.

Important:

- Ensure that the instrument is powered-off before performing this procedure.
- The Standard and Performance instruments require different entrance aperture discs. When you order a replacement entrance-aperture disc and seal, refer to the size etched on each entrance-aperture disc to ensure that you order the correct type.

To replace the entrance-aperture seal and aperture disc:

1. Remove the source enclosure (see Removing the source enclosure from the instrument (Page 26)).
2. Remove the PEEK cone clamp and the gas cone by pulling the cone clamp away from the instrument.

   Figure 3–3: Removing the gas cone and PEEK cone clamp

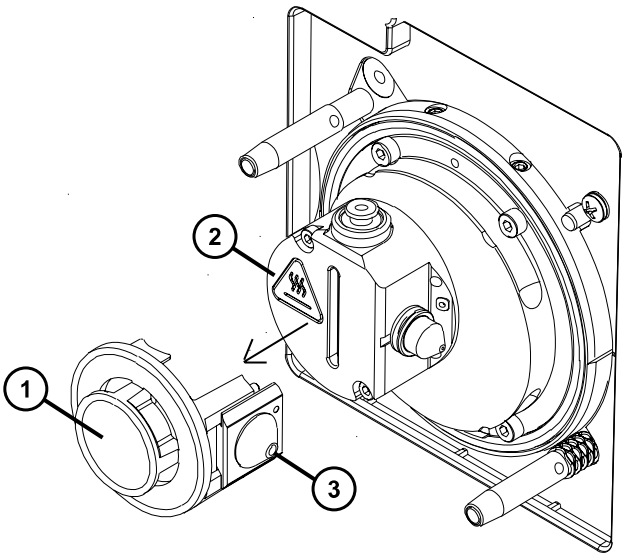

   (1) PEEK cone clamp

   (2) Ion block

   (3) Gas cone

   Note: The gas cone conceals the sample cone assembly.
3. Remove the sample cone assembly from the right-hand side of the ion block.

Figure 3–4: Removing the sample cone assembly

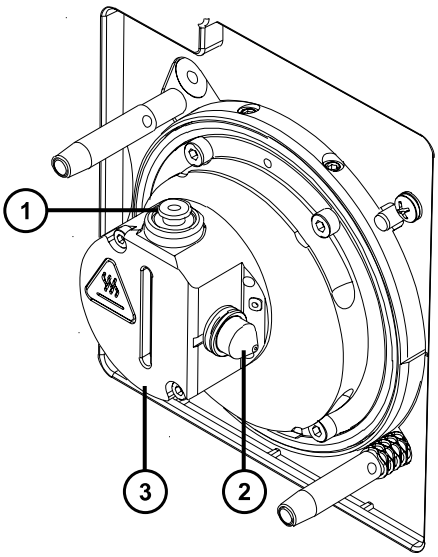

1. Calibration pin
2. Sample cone assembly
3. Ion block

4. Disassemble the sample cone assembly parts by hand.

Figure 3–5: Sample cone assembly components

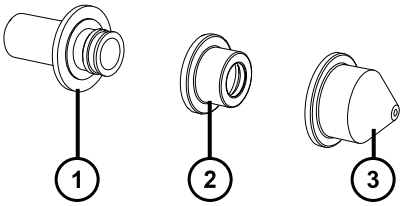

1. Entrance-aperture carrier and O-ring (O-ring not visible in this image)
2. Entrance-aperture seal and disc
3. Sample cone

5. Inspect the gas cone and sample cone for contamination. If these components are visibly fouled, to clean them, refer to Cleaning the source components (Page 32).
6. Remove the entrance-aperture seal and the aperture disc.

   Note: Dispose of these according to your local environmental regulations.
7. Insert the entrance-aperture seal and disc into the sample cone, and then refit this to the entrance-aperture carrier.
8. Ensure that the entrance-aperture carrier O-ring is fitted securely.

9. Refit the sample cone assembly into the gas cone.
10. Refit the PEEK cone clamp and the gas cone assembly to the ion block.
11. Refit the source enclosure to the instrument (see Fitting the source enclosure to the instrument (Page 27)).

3.9 Cleaning the source components

Clean the source components when these conditions apply:

- The aperture disc, sample cone, and cone gas nozzle are visibly fouled.
- You have dismissed inlet and sample-related causes for decreased signal intensity.

3.9.1 Removing the ion block, the calibration pin, and the entrance-aperture carrier

Before you remove the ion block and entrance-aperture carrier, remove and inspect the gas cone and sample cone for contamination (see Replacing the entrance-aperture seal and disc (Page 29)). If cleaning these components fails to increase signal sensitivity, remove and clean the ion block and entrance-aperture carrier.

Required materials

- Chemical-resistant, powder-free gloves
- 2.5-mm hex wrench

Warning: To avoid personal contamination with biologically hazardous or toxic compounds, wear clean, chemical-resistant, powder-free gloves when performing this procedure.

Warning: To avoid burn injuries, allow the ion block to cool before performing this procedure.

Warning: To avoid puncture injuries from the sharp calibration pin, use care when removing it from and replacing it in the ion block.

Important: You must power-off the instrument and wait five minutes for it to vent before performing this procedure. To power-off the instrument, press and hold the power button for approximately five seconds.

To remove the ion block:

1. Remove the source enclosure (see Removing the source enclosure from the instrument (Page 26)).

2. Remove the PEEK cone clamp and the gas cone by pulling the cone clamp away from the instrument.

Figure 3–6: Removing the gas cone and PEEK cone clamp

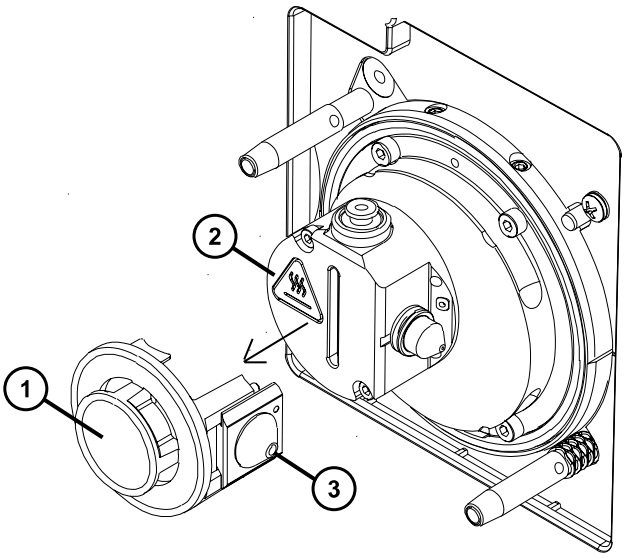

1. PEEK cone clamp
2. Ion block
3. Gas cone

3. Remove the sample cone assembly from the right-hand side of the ion block.

Figure 3–7: Removing the sample cone assembly

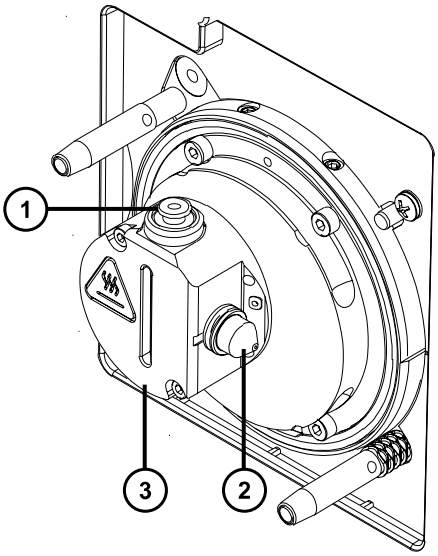

1. Calibration pin

(2) Sample cone assembly

(3) Ion block

4. Disassemble the sample cone assembly parts by hand.

Figure 3–8: Sample cone assembly components

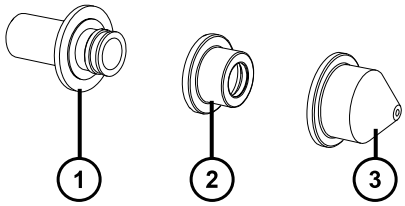

(1) Entrance-aperture carrier and O-ring

(2) Entrance-aperture seal and disc

(3) Sample cone

5. Remove the O-ring from the entrance-aperture carrier.
6. Pull the calibration pin out from the ion block, and then remove the calibration pin O-ring.

Figure 3–9: Ion block and calibration pin

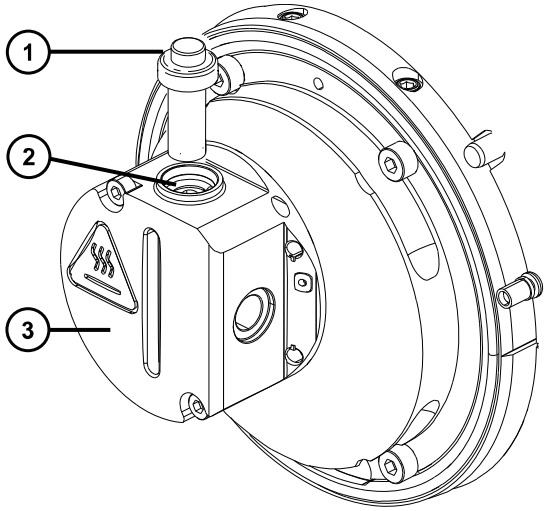

(1) Calibration pin

(2) Calibration pin O-ring

(3) Ion block

7. Loosen and then remove the two screws that secure the ion block to the instrument using the 2.5-mm hex wrench.

8. Remove the ion block by pulling it away from the instrument.

Figure 3–10: Removing the ion block

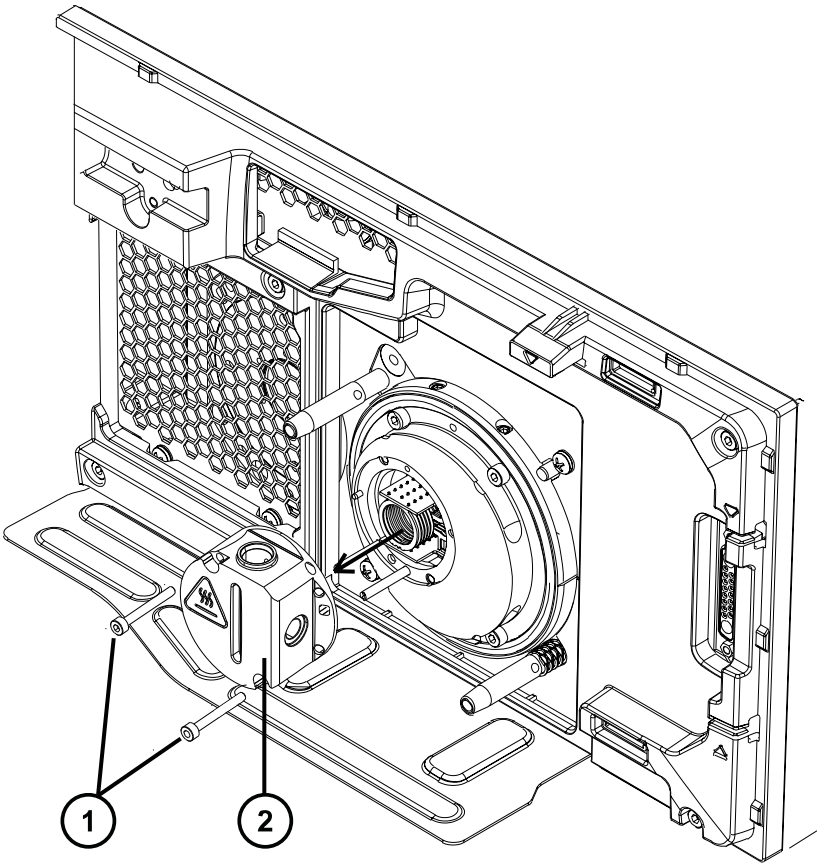

1 Securing screws

2 Ion block

Note: If the ion block does not release, insert the short end of the hex wrench into the slot on the upper right-hand side of the ion block and, using the long end, lever the wrench from side to side to break the seal between the ion block and the source housing.

Note: Fragile components protrude from the source housing into the ion block. To avoid damaging the components when removing the ion block using a hex wrench, follow these guidelines:

- Use care when levering the ion block with the hex wrench.
- Ensure that you keep the ion block straight while you remove it from the source housing. Turning the ion block while levering or removing it can bend and damage the fragile components behind.
- Do not insert any other implement to break the seal between the ion block and the source housing.

Figure 3–11: Levering the ion block

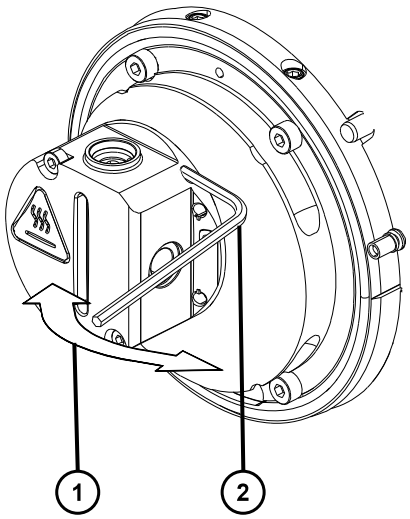

1. Leverage path
2. 2.5-mm hex wrench

9. Clean the ion block and entrance-aperture carrier (see Cleaning the source components (Page 36)).

3.9.2 Cleaning the source components

Required materials

- Chemical-resistant, powder-free gloves
- Appropriately sized glass vessels in which to completely immerse components when cleaning. Use only glassware not previously cleaned with surfactants.
- HPLC-grade (or better) methanol
- HPLC-grade (or better) water
- Formic acid
- Ultrasonic bath
- Source of oil-free, inert gas (nitrogen or argon) for drying (air-drying optional)
- Wash bottle containing HPLC-grade (or better) 1:1 methanol/water
- Large beaker

Warning: To avoid personal contamination with biologically hazardous or toxic compounds, wear clean, chemical-resistant, powder-free gloves when performing this procedure.

Warning: To avoid injury when working with formic acid, which is extremely corrosive and toxic, take extreme care handling it, and use a fume hood and suitable protective equipment.

To clean the source components:

1. Ensure that all O-rings are removed from the source components.
2. Immerse the gas cone, sample cone, entrance-aperture carrier, and ion block in separate glass vessels containing 1:1 methanol/water.

   Note: Do not clean the consumable components of the aperture assembly, such as the entrance-aperture seal and entrance-aperture disc. Instead, replace these consumables when performing general maintenance, when the components are visibly damaged, or when the performance or cleanliness of the machine is compromised.

   Tip: If the components are obviously contaminated, use 45:45:10 methanol/water/formic acid.
3. Place the vessels in the ultrasonic bath for 30 minutes.
4. If you used formic acid in the cleaning solution, do as follows:
   a. Rinse the components by immersing them in separate glass vessels containing water, and then place the vessels in the ultrasonic bath for 20 minutes.
   b. Remove any residual water from the components by immersing them in separate glass vessels containing methanol, and then place the vessels in the ultrasonic bath for 10 minutes.

      Notice: To avoid recontaminating the components, wear clean, chemical-resistant, powder-free gloves.
5. Carefully remove the components from the vessels and blow dry them with inert, oil-free gas.
6. Inspect each component for persisting contamination. If contamination is present, do as follows:
   a. Use the wash bottle containing 1:1 methanol/water to rinse the component over the large beaker.
   b. Blow dry the component with inert, oil-free gas.
7. Inspect each component for persisting contamination.

   Requirement: If contamination is present, clean the component again. If contamination is still present, dispose of the component according to local environmental regulations, and obtain a new one before reassembling the sampling cone assembly.

3.9.3 Refitting the source components

Required materials

- Chemical-resistant, powder-free gloves
- 2.5-mm hex wrench

To refit the source components:

Requirement: Wear clean, chemical-resistant, powder-free gloves when performing this procedure.

Note: If they are visibly damaged, replace the O-rings to the source components.

1. Place the ion block assembly against the ion block support on the front of the instrument, aligning the screw positions.
2. Secure the ion block to the instrument using the two screws, and tighten them using the 2.5-mm hex wrench.
3. Insert the calibration pin and the O-ring into the top of the ion block.
4. Insert the entrance-aperture seal and disc into the sample cone, and then refit this to the entrance-aperture carrier.

   Note: If the disc becomes separated from the entrance-aperture seal, simply reinsert the disc.
5. Fit the entrance-aperture carrier O-ring.
6. Insert the entrance-aperture carrier and sample cone assembly into the entrance-aperture on the right-hand side of the ion block.
7. Refit the PEEK cone clamp and the gas cone assembly to the ion block.
8. Refit the source enclosure (see Fitting the source enclosure to the instrument (Page 27)).

3.10 Cleaning the ion guide assembly

Clean the ion guide assembly when these conditions apply:

- You have dismissed LC and sample-related causes for decreased signal intensity.
- Cleaning the source components fails to increase signal stability.
- Replacing the entrance-aperture seal and disc fails to increase signal stability.

3.10.1 Removing the ion guide assembly from the source assembly

Required materials

- Chemical-resistant, powder-free gloves
- 3-mm hex wrench
- 2.5-mm hex wrench
- Flat-blade screwdriver

Warning: To avoid personal contamination with biologically hazardous or toxic compounds, wear clean, chemical-resistant, powder-free gloves when performing this procedure.

Warning: To avoid puncture injuries from the sharp calibration pin, use care when removing it from and replacing it in the ion block.

Warning: To avoid burn injuries, exercise care when handling the components of the source enclosure heated to high temperatures. Wait until the hot components have sufficiently cooled before you handle them.

Notice: To avoid damaging the StepWave ion guide assembly, handle it and its components carefully throughout the cleaning procedure. In particular, do not touch the wiring.

Important: Ensure that the instrument is powered-off before performing this procedure.

To remove the ion guide assembly from the source assembly:

1. Remove the source enclosure from the instrument (see Removing the source enclosure from the instrument (Page 26)).
2. Remove the PEEK cone clamp and the gas cone by pulling the cone clamp away from the instrument.
3. Use the 3-mm hex wrench to remove the four screws that secure the pumping block to the instrument.
4. Carefully pull the pumping block away from the instrument and place it on a flat surface.

   Note: The ion guide assembly is attached to the rear side of the pumping block.

Figure 3–12: Removing the pumping block and ion guide

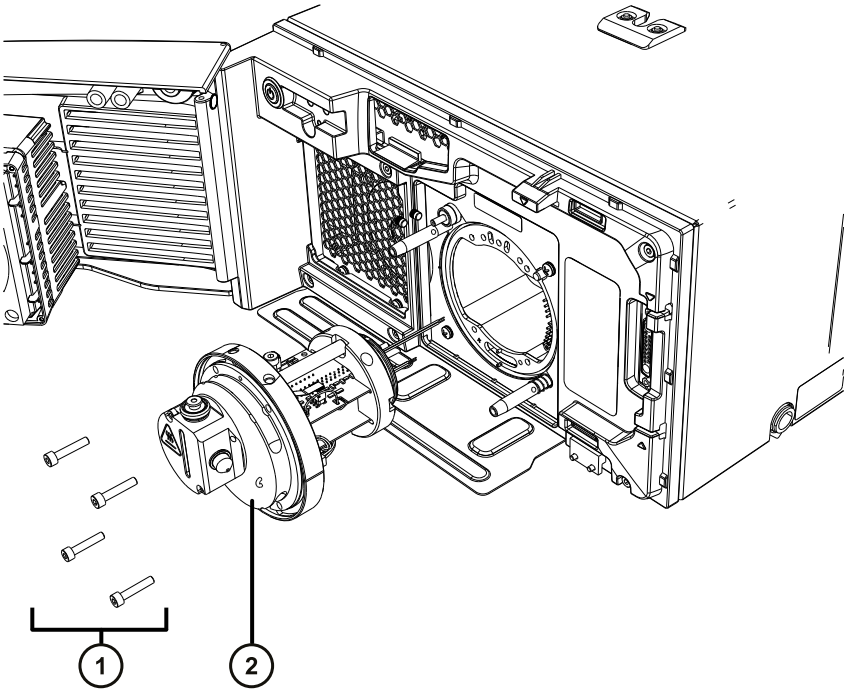

1 Securing screws (4)

2 Pumping block

5. Remove the three slotted screws that secure the differential aperture to the ion guide housing using the flat-blade screwdriver, and then remove the differential aperture.

Figure 3–13: Removing the differential aperture

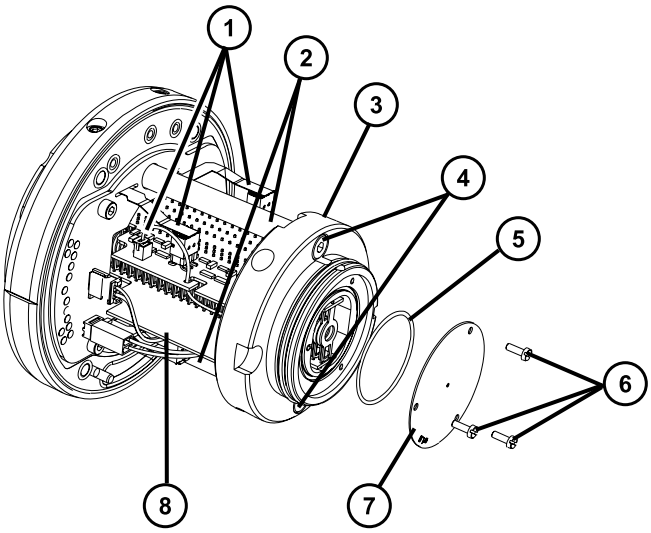

1 Electrical connectors

(2) Ion guide support rods

(3) Differential aperture support

(4) Differential aperture support screws

(5) Differential aperture O-ring

(6) Differential aperture securing screws

(7) Differential aperture

(8) Ion guide

Recommendation: Clean the differential aperture (see Cleaning the differential aperture (Page 42)) before disassembling the ion guide housing. If cleaning the differential aperture fails to increase signal sensitivity, continue with this procedure, and then clean the ion guide (see Cleaning the ion guide assembly (Page 43)).

6. Remove the differential aperture O-ring.
7. Disconnect the five electrical connectors from the ion guide, leaving them attached to the pumping block.

Figure 3–14: Ion guide – electrical connectors

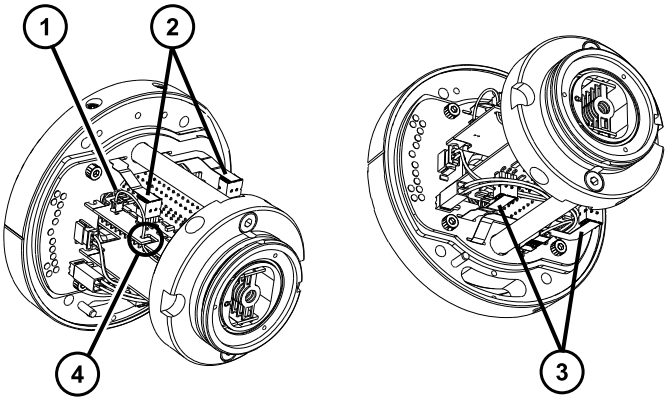

(1) 2-way connector – top view

(2) 6-way connectors – top view

(3) 6-way connectors – underside view

(4) Wire routing notch

8. Remove the two screws that secure the differential aperture support to the ion guide support rods using the 2.5-mm hex wrench, and then remove the differential aperture support and ion guide from the pumping block.

   Note: The ion guide is attached to the differential aperture support.

9. To detach the ion guide from the differential aperture support, remove the four ion guide securing screws using the 2.5-mm hex wrench.

   Figure 3–15: Removing the ion guide

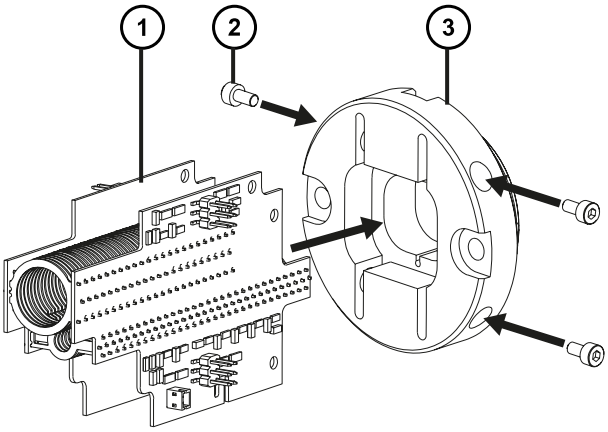

   1 Ion guide

   2 Ion guide securing screws (fourth screw is obscured)

   3 Differential aperture support

10. To clean the components, see Cleaning the differential aperture (Page 42) and Cleaning the ion guide assembly (Page 43).

3.10.2 Cleaning the differential aperture

Required tools and materials

- Chemical-resistant, powder-free gloves
- Suitable glass vessel in which to completely immerse the differential aperture when cleaning
- HPLC-grade deionized water
- Waters MS Cleaning Solution (186006846) or HPLC-grade (or better) 1:1 methanol/water
- Holding container for used cleaning solution
- Ultrasonic bath
- Source of oil-free, inert gas (for example, nitrogen) for drying

Warning: To avoid personal contamination with biologically hazardous or toxic compounds, wear clean, chemical-resistant, powder-free gloves when performing this procedure.

To clean the differential aperture:

1. Place the differential aperture in the glass vessel.
2. Add Waters MS Cleaning Solution or 1:1 methanol/water to the vessel until the differential aperture is immersed completely.
3. Place the vessel containing the differential aperture in the ultrasonic bath for 20 minutes.
4. Carefully pour the cleaning solution from the vessel holding the differential aperture into the holding container, retaining the differential aperture in the vessel.

   Tip: You can reuse Waters MS Cleaning Solution for one subsequent cleaning.
5. Flush with deionized water until all the MS cleaning solution is removed.

   Important: Ensure that no MS Cleaning Solution remains on the component before continuing this procedure.
6. Fill the vessel with isopropyl alcohol, ensuring that the differential aperture is immersed completely.
7. Place the vessel containing the differential aperture in the ultrasonic bath for 20 minutes.
8. Carefully remove the differential aperture from its vessel and blow-dry the component using inert, oil-free gas.
9. Discard the used isopropyl alcohol, using an appropriate waste container.

3.10.3 Cleaning the ion guide assembly

Required tools and materials

- Chemical-resistant, powder-free gloves
- Suitable vessel in which to completely immerse the ion guide assembly when cleaning
- Two lengths of PEEK, PTFE, or stainless steel tubing, appropriately sized for suspending the ion guide assembly in the glass vessels when cleaning
- HPLC-grade deionized water
- Waters MS Cleaning Solution (186006846) or HPLC-grade (or better) 1:1 methanol/water
- Holding container for used Waters MS Cleaning Solution
- HPLC-grade isopropyl alcohol
- Ultrasonic bath
- Source of oil-free, inert gas (for example, nitrogen) for drying

Warning: To avoid injury when working with MS cleaning solution, take care when handling it and use a fume hood and suitable protective equipment.

Warning: To avoid personal contamination with biologically hazardous or toxic compounds, wear clean, chemical-resistant, powder-free gloves when performing this procedure.

To clean the ion guide assembly:

1. Bend a PEEK, PTFE, or stainless steel tube into a hook shape and use it to carefully suspend the first ion guide PCB assembly in the glass vessel so that the bottom of the assembly does not touch the bottom of the vessel.

   Notice: To avoid damage to the ion guide caused by vibration, ensure that the bottom of the ion guide does not touch the bottom of the glass vessel.

   Figure 3–16: Cleaning the ion guide

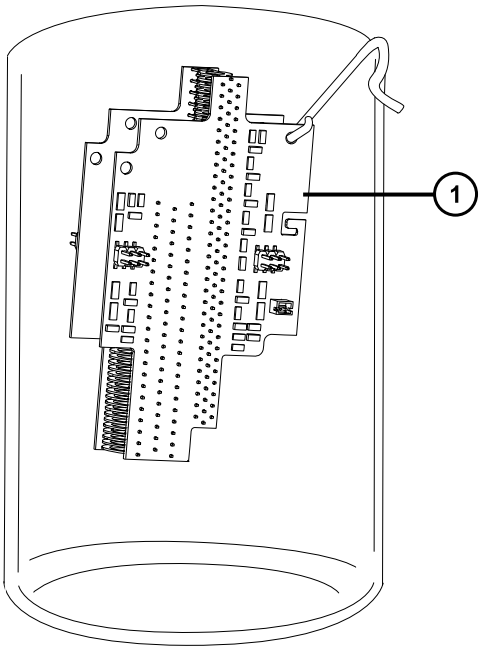

   1 Ion guide

2. Add Waters MS Cleaning Solution or 1:1 methanol/water to the glass vessel until the ion guide is immersed completely.
3. Place the vessel containing the ion guide in the ultrasonic bath for 20 minutes.
4. Carefully pour the cleaning solution from the vessel holding the ion guide into the holding container, retaining the ion guide in the vessel.

Tip: You can reuse Waters MS Cleaning Solution for one subsequent cleaning.

5. Flush with deionized water until all the MS cleaning solution is removed.

   Important: Ensure that no MS Cleaning Solution remains on the component before continuing this procedure.

6. Fill the vessel with isopropyl alcohol, ensuring that the ion guide is immersed completely.
7. Place the vessel containing the ion guide in the ultrasonic bath for 20 minutes.
8. Carefully remove the ion guide from its vessel and blow-dry the component using inert, oil-free gas.
9. Discard the used isopropyl alcohol using an appropriate waste container.

3.10.4 Fitting the ion guide assembly to the instrument

Required materials

- Chemical-resistant, powder-free gloves
- 2.5-mm hex wrench
- 3-mm hex wrench
- Flat-blade screwdriver

Warning: To avoid personal contamination with biologically hazardous or toxic compounds, wear clean, chemical-resistant, powder-free gloves when performing this procedure.

To fit the ion guide assembly to the instrument:

1. Carefully slide the ion guide's PCBs into the differential aperture support.

   Figure 3–17: Assembling the ion guide housing

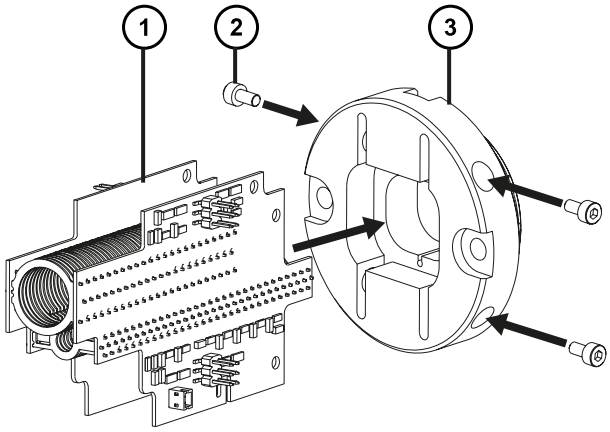

1 Ion guide

(2) Ion guide securing screws (fourth screw is obscured)

(3) Differential aperture support

2. Secure the ion guide to the differential aperture support using the four ion guide securing screws, and tighten them using the 2.5-mm hex wrench.
3. Secure the ion guide and differential aperture support assembly to the pumping block's ion guide support rods using the two differential aperture support screws, and tighten them using the 2.5-mm hex wrench.

   Tip: It is normal for the ion guide assembly to have some freedom to move when assembled correctly.
4. Reconnect the five electrical connectors to the ion guide.

   Figure 3–18: Ion guide – electrical connectors

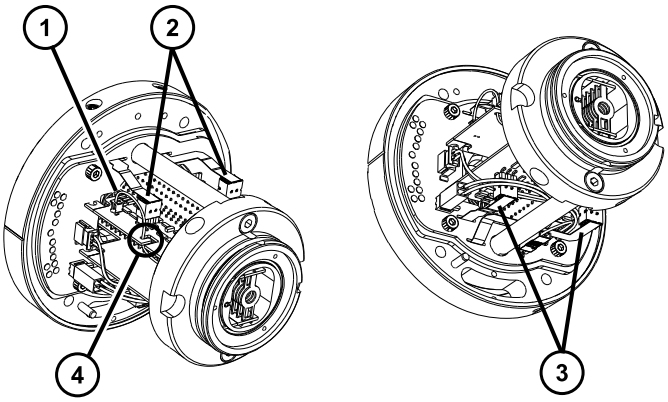

(1) 2-way connector – top view

(2) 6-way connectors – top view

(3) 6-way connectors – underside view

(4) Wire routing notch

   Note: Ensure that you route the wire for the 2-way connector through the wire routing notch.
5. Fit the differential aperture O-ring to the differential aperture support.

   Note: If the O-ring is visibly damaged, replace it.

Figure 3–19: Fitting the O-ring and differential aperture

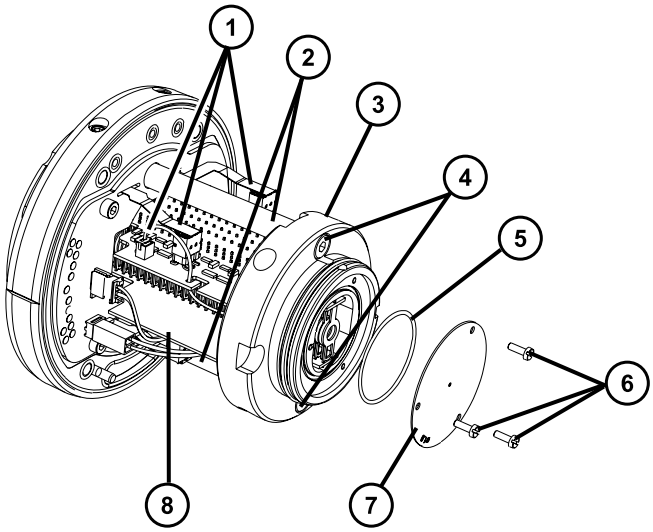

1. Electrical connectors
2. Ion guide support rods
3. Differential aperture support
4. Differential aperture support screws
5. Differential aperture O-ring
6. Differential aperture securing screws
7. Differential aperture
8. Ion guide

6. Fit the differential aperture to the differential aperture support using the three slotted screws, and then secure the screws using a flat-blade screwdriver.
7. Carefully slide the pumping block and ion guide assembly into the instrument's source housing.

   Tip: To correctly orient the pumping block, ensure that the ion guide remains visible at the left-hand edge of the pumping block's front face.

Figure 3–20: Fitting the pumping block

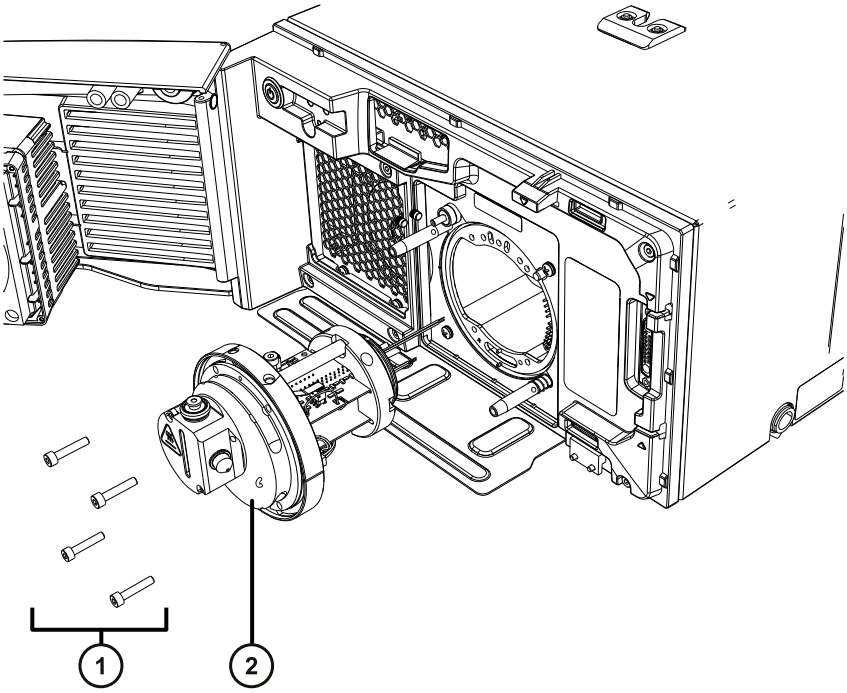

1 Securing screws (4)

2 Pumping block

8. Secure the pumping block to the instrument using the four pumping block securing screws, and then tighten them using the 3-mm hex wrench.
9. Refit the PEEK cone clamp and the gas cone assembly to the ion block.
10. Fit the source enclosure to the instrument (see Fitting the source enclosure to the instrument (Page 27)).

3.11 Replacing the source enclosure

Required materials

- Chemical-resistant, powder-free gloves
- Replacement source enclosure

Warning: To avoid personal contamination with biologically hazardous or toxic compounds, wear clean, chemical-resistant, powder-free gloves when performing this procedure.

Notice: To avoid damaging the fragile probe, use care when removing it from the source enclosure.

Warning: To avoid puncture injuries from the sharp ESI capillary, use care when inserting and removing the probe from the source enclosure.

Warning: To avoid burn injuries, exercise care when handling the components of the source enclosure heated to high temperatures. Wait until the hot components have sufficiently cooled before you handle them.

To replace the source enclosure:

1. In the software, click **Standby** to put the instrument into Standby.
2. Open the instrument door.

Figure 3–21: Replacing the source enclosure

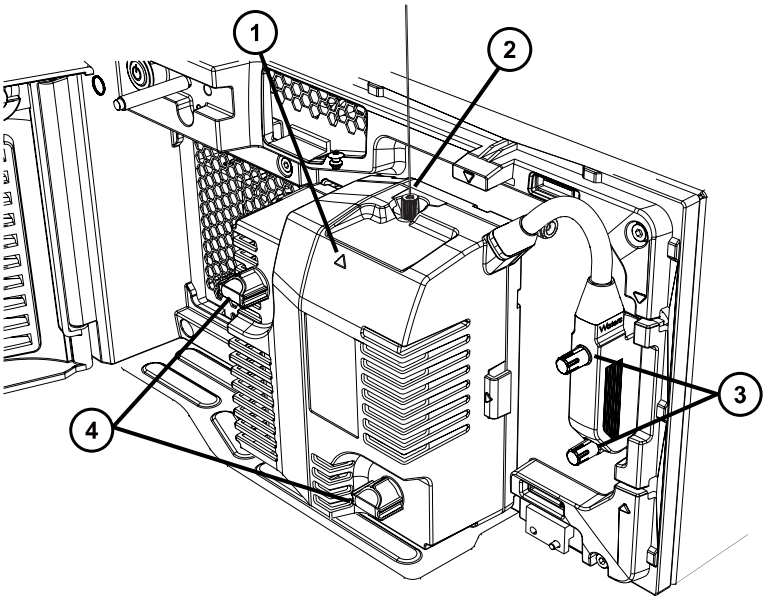

1. Source enclosure
2. Probe capillary connection at source
3. Cable screws
4. Source enclosure thumbscrews

3. Disconnect the source enclosure's electrical cable from the front of the instrument by loosening the screws and pulling the cable from the socket.
4. Loosen the two thumbscrews on the front of the source enclosure.
5. Remove the source enclosure by pulling it away from the instrument using both hands, and place it on a flat surface.

6. Loosen the probe fitting and then remove the probe capillary from the top of the source enclosure before you carefully insert it into inlet on the new source enclosure.
7. Tighten the probe fitting until it clicks.
8. Discard the old source enclosure.
9. Use both hands to slide the replacement source enclosure onto the instrument's supporting rods.
10. To secure the enclosure against the instrument, tighten the two thumbscrews on the front of the source enclosure.

    Notice: To avoid damage to the electrical connector's screws, do not overtighten them.

11. Connect the electrical cable to the socket on the right-hand side of the instrument's front panel and tighten the screws.
12. Close the instrument door, ensuring that the capillary is fitted through the notch at the top of the instrument door.
13. Wait for the source pressure test to complete.
14. In the software, click **Operate** to put the instrument into Operate.

3.12 Replacing the probe capillary assembly

Required tools and materials

- Chemical-resistant, powder-free gloves
- Replacement probe capillary

Warning: To avoid puncture injuries from the sharp probe capillary, use care when inserting it into the source enclosure.

Notice: To avoid damaging the fragile probe capillary, if the instrument is situated above eye level, disconnect the source enclosure and place it on a bench top or other surface so that you can exercise caution when inserting the probe (see Removing the source enclosure from the instrument (Page 26)).

To replace the probe capillary assembly:

1. In the software, click **Standby** to put the instrument into Standby.
2. Open the instrument door.

Figure 3–22: Replacing the probe capillary assembly

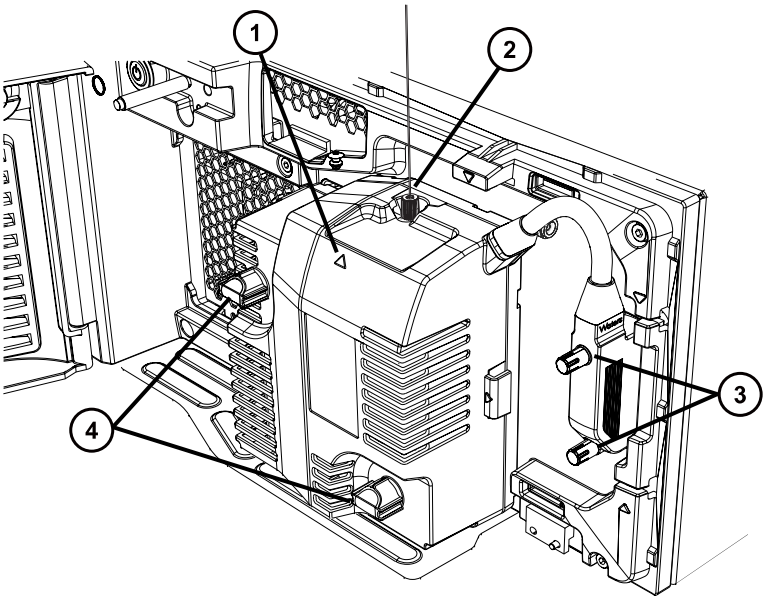

1. Source enclosure
2. Probe capillary connection at source
3. Cable screws
4. Source enclosure thumbscrews

3. Loosen and remove the end of the probe capillary assembly connected to the LC or syringe pump.
4. Loosen and remove the end of the probe capillary assembly connected to the top of the source enclosure.
5. Remove and dispose of the probe capillary assembly.
6. Using the replacement probe capillary assembly, carefully insert the capillary end into the inlet on top of the source enclosure and tighten the fitting until it clicks.

Figure 3–23: Fitting the probe capillary assembly

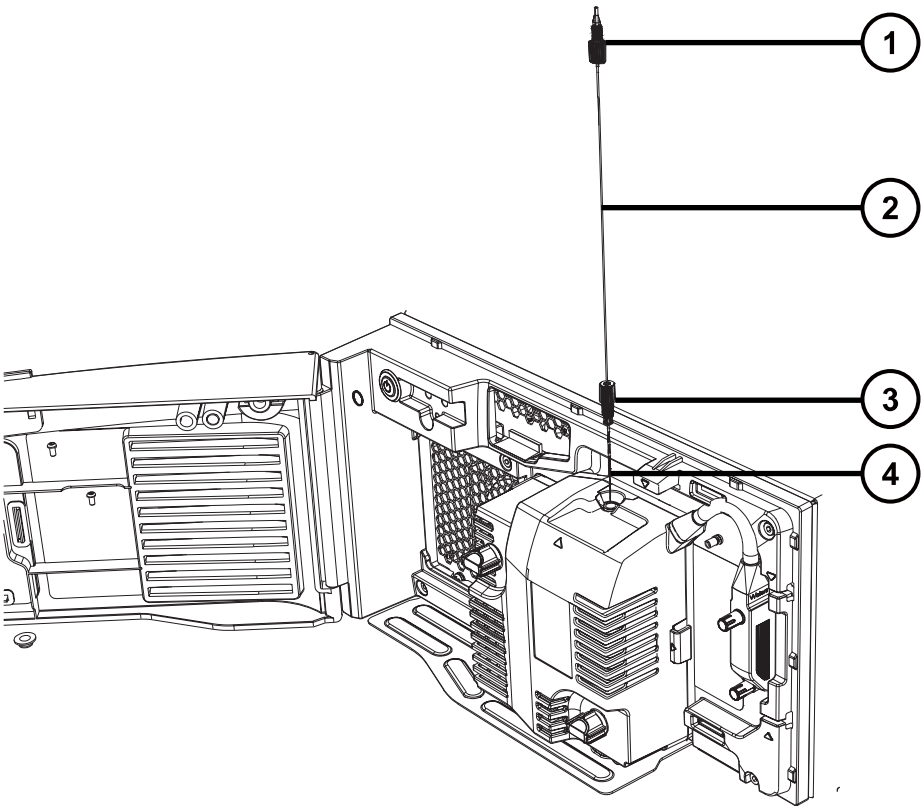

1. PEEK fitting
2. Probe capillary assembly
3. Probe fitting
4. Capillary

7. Fit the PEEK fitting end of the probe capillary assembly to the LC or syringe pump and secure until finger-tight.
8. Close the instrument door, ensuring that the capillary is fitted through the notch at the top of the instrument door.
9. Wait for the source pressure test to complete.
10. In the software, click **Operate** to put the instrument into Operate.

3.13 Cleaning the instrument case

Notice: To avoid abrading the surfaces of the instrument, do not use abrasives or solvents when cleaning them.

Use a soft cloth, dampened with water, to clean the outside surfaces of the mass spectrometer.

3.14 Emptying the nitrogen exhaust trap

Inspect the source exhaust trap bottle in the instrument's exhaust line daily, and empty it before it is more than 10% full.

Figure 3–24: Source exhaust trap bottle

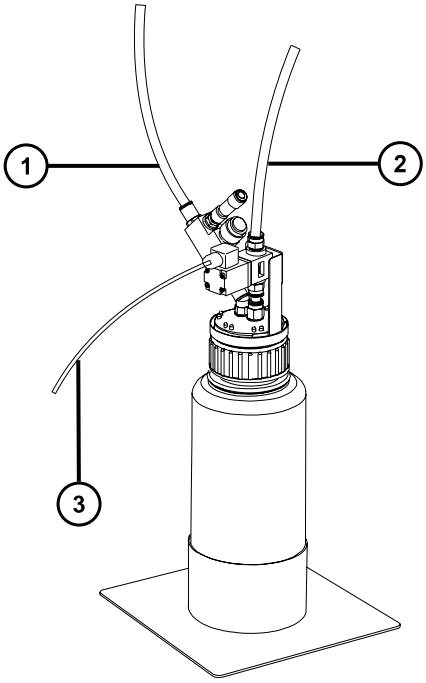

1. From instrument exhaust connection (12-mm OD)
2. To laboratory exhaust port (12-mm OD)
3. Exhaust solenoid cable

Required tools and materials

- Chemical-resistant, powder-free gloves

To empty the source exhaust trap bottle:

Requirement: Wear clean, chemical-resistant, powder-free gloves when performing this procedure.

1. Put the instrument into Standby.
2. In the software, stop the LC flow.

Warning: To avoid personal contamination with biologically hazardous or toxic compounds, wear clean, chemical-resistant, powder-free gloves when performing this procedure.

3. By holding the cap in place and unscrewing the bottle, remove the nitrogen exhaust trap from its cap and associated fittings.

Warning: To avoid spreading contamination with biologically hazardous, toxic, and corrosive materials, dispose of all waste materials according to local environmental regulations.

4. Dispose of the waste liquid in accordance with local environmental regulations.
5. Fit and fully tighten the trap onto its cap.
6. Secure the trap in the upright position.
7. In the software, run the source pressure test, and then put the instrument into Operate.

   Note: If the source pressure test fails, ensure that the exhaust trap bottle's cap is securely screwed on.

8. In the software, start the LC flow.

3.15 Emptying the liquid trap bottle

Note: This section applies to the Performance QDa detector only. The Standard instrument uses a diaphragm pump, which does not require oil.

Inspect the VACUUBRAND RE 6 rotary vane pump daily before using it and empty the liquid trap bottle if required. For details about performing this task, see the *VACUUBRAND Technology for Vacuum Systems Instructions for use*. (VACUUBRAND manual number 999139/ 11/20/2013).

Figure 3–25: Roughing pump with liquid trap bottle

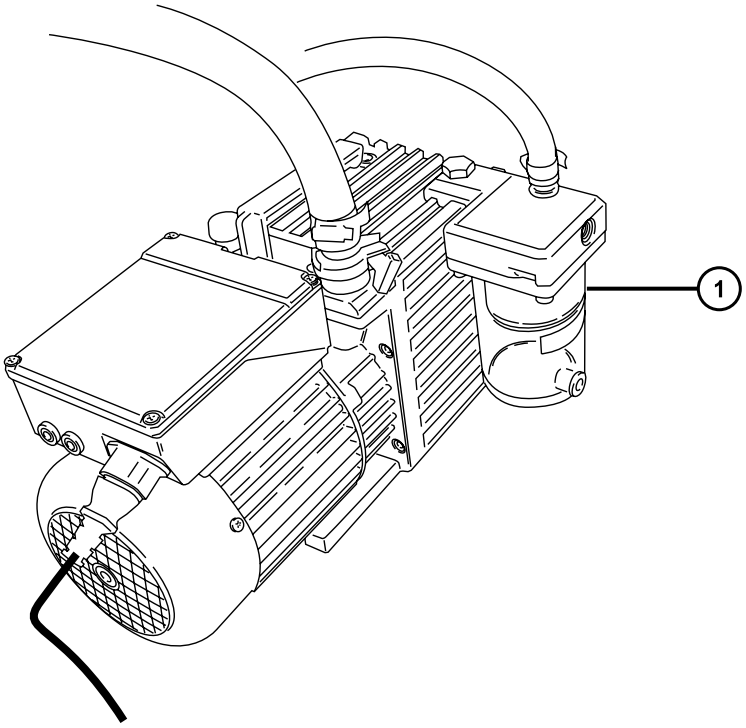

1 Liquid trap bottle

3.16 Maintaining the rotary backing pump's oil

Note: This section applies to the Performance QDa detector only. The Standard instrument uses a diaphragm pump, which does not require oil.

Replace the backing pump's oil when any of the following conditions apply:

- The oil level is low.

  Tip: To check the oil level, view it through the sight glass on the pump's rear panel.
- The oil in the pump appears darker than new oil, is odorous, or is visibly contaminated.
- The oil has been in use for more than one year.

Required materials

- Chemical-resistant, powder-free gloves
- Tray on which to place the pump
- Container to catch used oil
- Suitable pump oil

Warning: To avoid personal contamination with biologically hazardous or toxic compounds, wear clean, chemical-resistant, powder-free gloves when performing this procedure.

Warning: To avoid burn injuries, allow the pump to cool before touching surfaces displaying the burn warning symbol.

To add oil to the backing pump:

1. In the software, stop the LC flow.
2. Power-off the instrument using the power button in the top, left-hand corner of the front panel.
3. Wait approximately 5 minutes to allow the instrument to vent.
4. Switch off the pump and disconnect the power cable.
5. Place the pump on a tray suitable for catching dripping oil.
6. Remove the oil-drain plug from the pump's rear panel.

Figure 3–26: Backing-pump rear panel

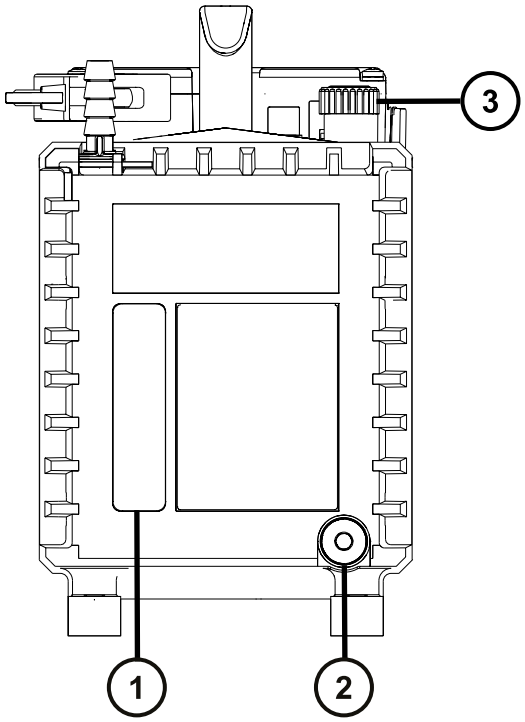

1 Oil level sight glass

2 Oil drain plug

3 Oil inlet plug

7. Tilt the pump slightly and catch the oil in a suitable container.
8. Dispose of the oil according to local environmental regulations.
9. Insert the oil-drain plug into the pump's rear panel.
10. If the oil shows signs of heavy contamination, for example, a dark color or visible particulates, flush the pump by following these steps:
    a. Pour 50 mL of fresh oil into the pump inlet, on the pump's top side.
    b. Operate the pump briefly.
    c. Remove the oil-drain plug and drain the flushing oil into a suitable container.
    d. If necessary, repeat the flushing procedure until all contaminants are removed.
11. Dispose of used oil according to local environmental regulations.
12. Insert the oil-drain plug into the pump's rear panel.
13. Remove the oil-inlet plug and pour fresh oil into the oil-inlet port until the level reaches the "max" mark on the sight glass.

    ! **Notice:** Do not fill the pump beyond the "max" mark.

14. Refit the oil-inlet plug.

3.17 Gas ballasting the rotary backing pump

Note: This section applies to the Performance QDa detector only. The Standard instrument uses a diaphragm pump, which does not require oil.

! **Notice:** To avoid damaging the pump, do not leave it constantly in ballast mode. Doing so can run the pump dry and fill the trap bottle and exhaust lines with oil.

Note: To prevent the pump failing to start, do not power-on the QDa Detector when the backing pump is in ballast mode.

For more information about gas ballasting the backing pump, see the *VACUUBRAND Technology for Vacuum Systems Instructions for use* (VACUUBRAND rotary vane pump: model RE 6, part number 99139 / 11/20/2013).

3.18 Replacing the rotary backing pump's demister element

Note: This section applies to the Performance QDa detector only. The Standard instrument uses a diaphragm pump, which does not require oil.

For information about replacing the backing pump's demister element, see "Troubleshooting" in the *VACUUBRAND Technology for Vacuum Systems Instructions for use* (VACUUBRAND part number 99139 / 11/20/2013).

Contact Waters to order parts (see Contacting Waters (Page iii)).

3.19 Replacing the internal source exhaust valve (KAD)

Replace the source exhaust valve annually, or when a source-pressure test fails and all other causes of failure have been investigated.

Note: The following procedures apply only to instruments fitted with the internal source exhaust valve (serial number suffix "KAD"), shown in the figure below.

See Identifying your instrument version (Page 21) for guidance on identifying your QDa version and Connecting the external source exhaust valve assembly (KAB) (Page 98) for details about replacing the external source exhaust valve assembly (serial number suffix “KAB”).

Figure 3–27: Internal source exhaust valve—rear configuration

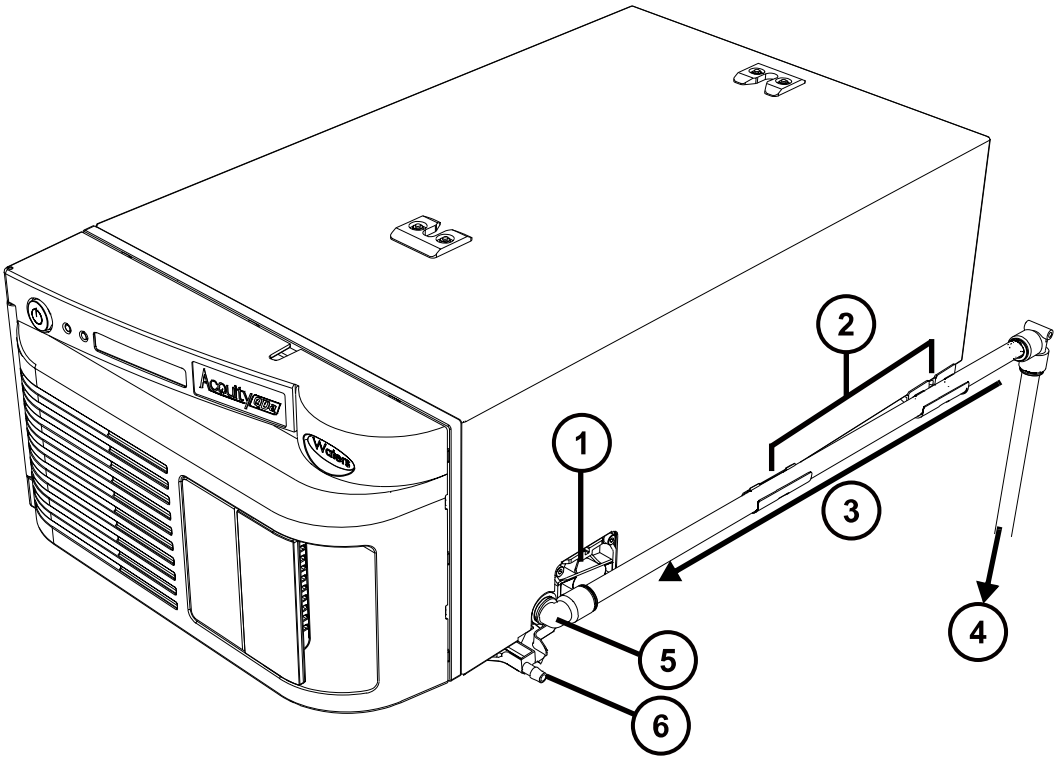

1. Valve grip panel
2. Exhaust hose bracket
3. PTFE exhaust tubing
4. Exhaust trap bottle

5 Source exhaust tube elbow connector

6 Waste liquid drain port

3.19.1 Removing the source exhaust valve

Before removing the source exhaust valve, ensure that a replacement valve (289010426) is available to install.

Required materials

- Chemical-resistant, powder-free gloves
- 5-mm hex wrench

To remove the source exhaust valve:

Requirement: Wear clean, chemical-resistant, powder-free gloves when performing this procedure.

1. If tubing is in a rear configuration, disconnect the source exhaust tubing and rotate the elbow connector to clear the path for removing the source exhaust valve from the enclosure.
2. Unscrew and remove the 4 retaining screws from the valve grip panel using the 5-mm hex wrench.
3. Hold the grip panel and pull to slide the valve out of the enclosure.

   Tip: If the source exhaust valve does not immediately release from the enclosure chamber, examine it for corrosion, waste buildup, or other blockage. If possible, remove any visible obstruction and apply reasonable force to release the valve from the enclosure.

Figure 3–28: Removing the source exhaust valve

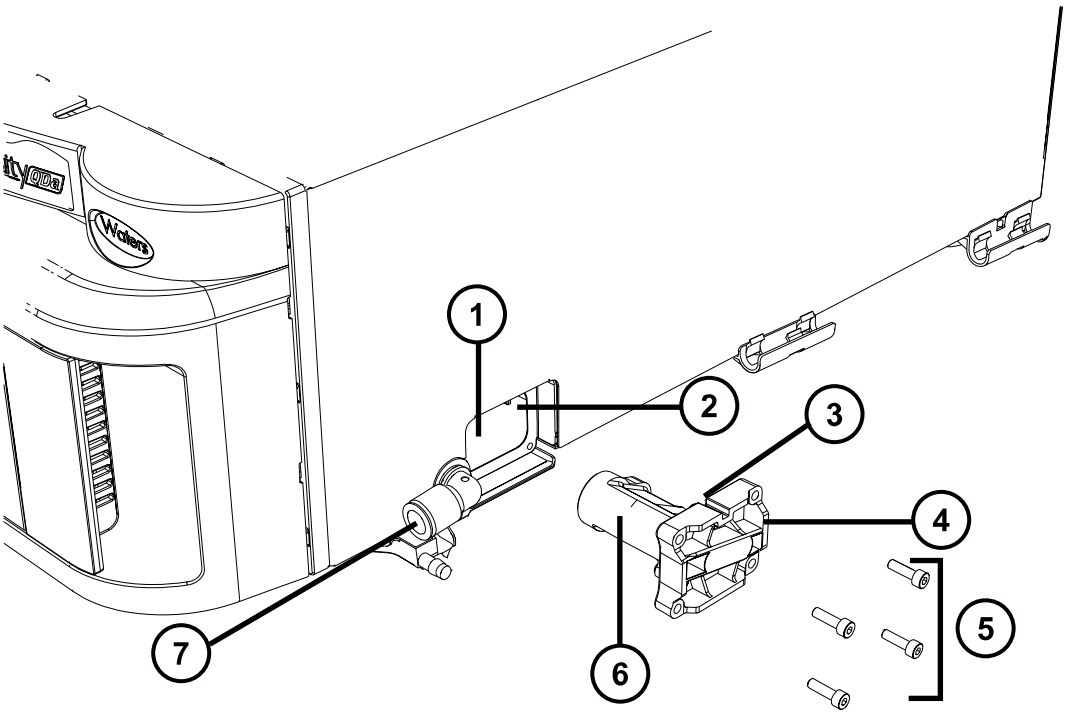

1. Source valve enclosure
2. Alignment key and grip panel keyway
3.
4. Valve grip panel
5. Retaining screws
6. Source exhaust valve
7. Source exhaust tube elbow connector

4. Dispose of the source exhaust valve in accordance with local environmental regulations.

3.19.2 Fitting the source exhaust valve

Perform the following procedure to fit the source exhaust valve into the enclosure.

Required materials

- Chemical-resistant, powder-free gloves
- 5-mm hex wrench
- Source exhaust valve (289010426)

To insert the source exhaust valve into the enclosure:

Requirement: Wear clean, chemical-resistant, powder-free gloves when performing this procedure.

1. To gain access for inserting the valve into the enclosure, remove any obstructive exhaust tubing and rotate the elbow connector of the source exhaust tube clear of the path.
2. Hold the source exhaust valve by the grip panel, orienting the curved edge of the panel toward the left.
3. Slide the valve into the enclosure and carefully slot the grip panel keyway over the corresponding alignment key at the top rim of the enclosure entrance.

Figure 3–29: Inserting the source exhaust valve

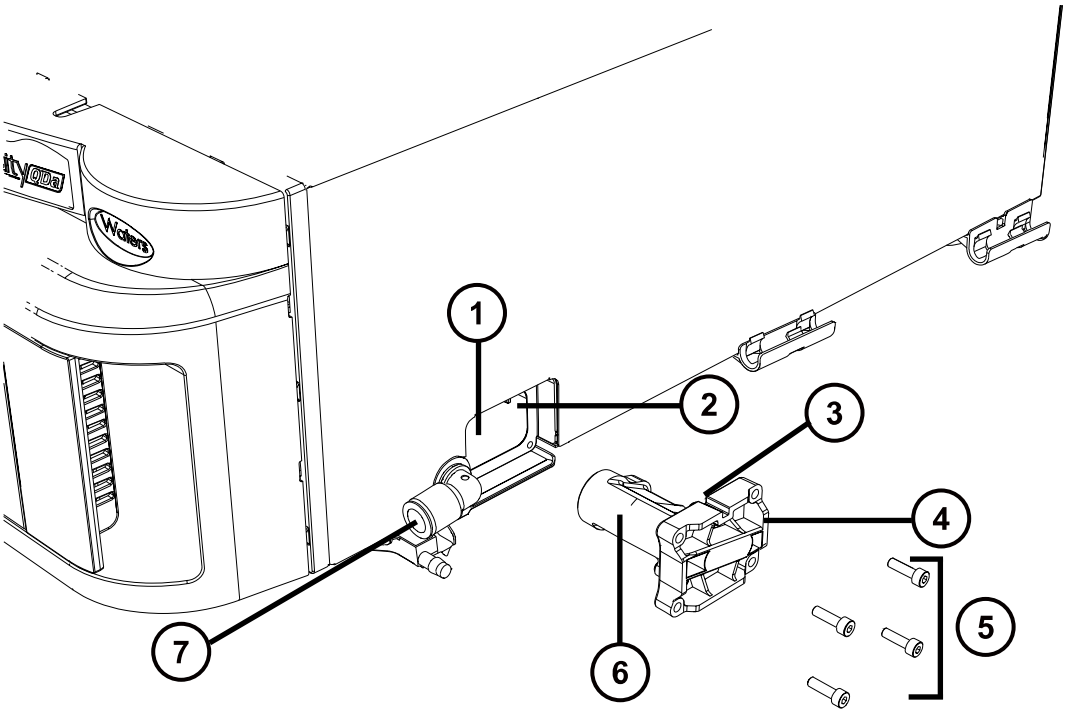

1. Source valve enclosure
2. Alignment key and grip panel keyway
3.
4. Valve grip panel

5 Retaining screws

6 Source exhaust valve

7 Source exhaust tube elbow connector

4. Ensure that the valve is firmly in place so that the panel is flush with the outer edge of the enclosure.
5. Insert the 4 retaining screws in each corner of the grip panel and tighten them using the 5-mm hex wrench.
6. Reconnect the source exhaust by threading the tubing through the hose brackets alongside the instrument and inserting the tubing into the elbow connector. See Connecting the internal source exhaust valve (KAD) (Page 101).

Note:

- Routing the exhaust tubing through the hose brackets positions the tubing at a downward gradient. Doing so prevents the pooling of solvents.
- To prevent the pooling of solvents in a front configuration, ensure that the source exhaust tubing is positioned forward on a downward gradient.

A Safety advisories

Waters products display safety symbols that identify hazards associated with the product's operation and maintenance. The symbols also appear in product manuals with statements that describe the hazards and advise how to avoid them. This appendix presents all safety symbols and statements that apply to Waters' product offerings. The symbols and statements can apply to a specific product, or apply to other products within the same system.

A.1 Warning symbols

Warning symbols alert you to the risk of death, injury, or seriously adverse physiological reactions associated with the misuse of an instrument or device. Heed all warnings when you install, repair, or operate any Waters instrument or device. Waters accepts no liability in cases of injury or property damage resulting from the failure of individuals to comply with any safety precaution when installing, repairing, or operating any of its instruments or devices.

The following symbols warn of risks that can arise when you operate or maintain a Waters instrument or device or component of an instrument or device. When one of these symbols appears in a manual's narrative sections or procedures, an accompanying statement identifies the applicable risk and explains how to avoid it.

Warning: (General risk of danger. When this symbol appears on an instrument, consult the instrument's user documentation for important safety-related information before you use the instrument.)

Warning: (Risk of burn injury from contacting hot surfaces.)

Warning: (Risk of electric shock.)

Warning: (Risk of fire.)

Warning: (Risk of sharp-point puncture injury.)

Warning: (Risk of hand crush injury.)

Warning: (Risk of injury caused by moving machinery.)

Warning: (Risk of exposure to ultraviolet radiation.)

Warning: (Risk of contacting corrosive substances.)

Warning: (Risk of exposure to a toxic substance.)

Warning: (Risk of personal exposure to laser radiation.)

Warning: (Risk of exposure to biological agents that can pose a serious health threat.)

Warning: (Risk of tipping.)

Warning: (Risk of explosion.)

Warning: (Risk of high-pressure gas release.)

A.1.1 Specific warnings

The following warnings (both symbols and text) can appear in the user manuals of particular instruments and devices, and on labels affixed to them or their component parts.

A.1.1.1 Burst warning

This warning applies to Waters instruments and devices fitted with nonmetallic tubing.

Warning: To avoid injury from bursting, nonmetallic tubing, heed these precautions when working in the vicinity of such tubing when it is pressurized:

- Wear eye protection.
- Extinguish all nearby flames.
- Do not use tubing that is, or has been, stressed or kinked.
- Do not expose nonmetallic tubing to compounds with which it is chemically incompatible: tetrahydrofuran, nitric acid, and sulfuric acid, for example.
- Be aware that some compounds, like methylene chloride and dimethyl sulfoxide, can cause nonmetallic tubing to swell, significantly reducing the pressure at which the tubing can rupture.

A.1.1.2 Mass spectrometer shock hazard

The following warning applies to all Waters mass spectrometers.

Warning: To avoid electric shock, do not remove protective panels from the device. The components within are not user-serviceable.

The following warning applies to certain mass spectrometers when they are in Operate mode.

Warning: To avoid harmless, static-like electric shock, ensure that the mass spectrometer is in Standby mode before you touch any of its external surfaces that are marked with this high-voltage warning symbol.

A.1.1.3 Mass spectrometer flammable solvents warning

This warning applies to mass spectrometers performing an analysis that requires the use of flammable solvents.

Warning: To prevent the ignition of flammable solvent vapors in the enclosed space of a mass spectrometer's ion source, ensure that these conditions are met:

- Nitrogen flows continuously through the source.
- You have installed a gas-fail device to interrupt the flow of LC solvent should the nitrogen supply fail.
- The nitrogen supply pressure does not fall below 650 kPa (6.5 bar, 94 psi) during an analysis requiring the use of flammable solvents.

A.1.1.4 Biohazard warning

The following warning applies to Waters instruments and devices that can process biologically hazardous materials. Biologically hazardous materials are substances that contain biological agents capable of producing harmful effects in humans.

Warning: To avoid infection from blood-borne pathogens, inactivated microorganisms, and other biological materials, assume that all biological fluids that you handle are infectious.

Specific precautions appear in the latest edition of the US National Institutes of Health (NIH) publication *Biosafety in Microbiological and Biomedical Laboratories* (BMBL).

Warning: Observe Good Laboratory Practice (GLP) at all times, particularly when working with hazardous materials. Consult the Safety Data Sheets regarding the solvents you use. Additionally, consult the safety representative for your organization regarding its protocols for handling such materials.

A.1.1.5 Biohazard and chemical hazard warning

This warning applies to Waters instruments and devices that can process biohazards, corrosive materials, or toxic materials.

Warning: To avoid personal contamination with biologically hazardous, toxic, or corrosive materials, you must understand the hazards associated with their handling.
Guidelines prescribing the proper use and handling of such materials appear in the latest edition of the National Research Council's publication, *Prudent Practices in the Laboratory: Handling and Management of Chemical Hazards*.
Observe Good Laboratory Practice (GLP) at all times, particularly when working with hazardous materials, and consult the safety representative for your organization regarding its protocols for handling such materials.

A.2 Notices

Notice advisories appear where an instrument, device, or component can be subject to use or misuse that can damage it or compromise a sample's integrity. The exclamation point symbol and its associated statement alert you to such risk.

Notice: To avoid damaging the case of the instrument or device, do not clean it with abrasives or solvents.

A.3 Bottles Prohibited symbol

The Bottles Prohibited symbol alerts you to the risk of equipment damage caused by solvent spills.

Prohibited: To avoid equipment damage caused by spilled solvent, do not place reservoir bottles directly atop an instrument or device or on its front ledge. Instead, place the bottles in the bottle tray, which serves as secondary containment in the event of spills.

A.4 Required protection

The Use Eye Protection and Wear Protective Gloves symbols alert you to the requirement for personal protective equipment. Select appropriate protective equipment according to your organization's standard operating procedures.

Requirement: Use eye protection when performing this procedure.

Requirement: Wear clean, chemical-resistant, powder-free gloves when performing this procedure.

A.5 Warnings that apply to all Waters instruments and devices

When operating this device, follow standard quality-control procedures and the equipment guidelines in this section.

Warning: Changes or modifications to this unit not expressly approved by the party responsible for compliance could void the user's authority to operate the equipment.

Avertissement : Toute modification sur cette unité n'ayant pas été expressément approuvée par l'autorité responsable de la conformité à la réglementation peut annuler le droit de l'utilisateur à exploiter l'équipement.

Warnung: Jedwede Änderungen oder Modifikationen an dem Gerät ohne die ausdrückliche Genehmigung der für die ordnungsgemäße Funktionstüchtigkeit verantwortlichen Personen kann zum Entzug der Bedienungsbefugnis des Systems führen.

Avvertenza: qualsiasi modifica o alterazione apportata a questa unità e non espressamente autorizzata dai responsabili per la conformità fa decadere il diritto all'utilizzo dell'apparecchiatura da parte dell'utente.

Advertencia: cualquier cambio o modificación efectuado en esta unidad que no haya sido expresamente aprobado por la parte responsable del cumplimiento puede anular la autorización del usuario para utilizar el equipo.

警告： 未经有关法规认证部门明确允许对本设备进行的改变或改装，可能会使使用者丧失操作该设备的合法性。

警告： 未經有關法規認證部門允許對本設備進行的改變或修改,可能會使使用者喪失操作該設備的權利。

경고: 규정 준수를 책임지는 당사자의 명백한 승인 없이 이 장치를 개조 또는 변경할 경우, 이 장치를 운용할 수 있는 사용자 권한의 효력을 상실할 수 있습니다.

警告: 規制機関から明確な承認を受けずに本装置の変更や改造を行うと、本装置のユーザーとしての承認が無効になる可能性があります。

Warning: Use caution when working with any polymer tubing under pressure:

- Always wear eye protection when near pressurized polymer tubing.
- Extinguish all nearby flames.
- Do not use tubing that has been severely stressed or kinked.
- Do not use nonmetallic tubing with tetrahydrofuran (THF) or concentrated nitric or sulfuric acids.
- Be aware that methylene chloride and dimethyl sulfoxide cause nonmetallic tubing to swell, which greatly reduces the rupture pressure of the tubing.

Avertissement : Manipulez les tubes en polymère sous pression avec precaution:

- Portez systématiquement des lunettes de protection lorsque vous vous trouvez à proximité de tubes en polymère pressurisés.
- Eteignez toute flamme se trouvant à proximité de l’instrument.
- Evitez d'utiliser des tubes sévèrement déformés ou endommagés.
- Evitez d'utiliser des tubes non métalliques avec du tétrahydrofurane (THF) ou de l'acide sulfurique ou nitrique concentré.
- Sachez que le chlorure de méthylène et le diméthylesulfoxyde entraînent le gonflement des tuyaux non métalliques, ce qui réduit considérablement leur pression de rupture.

Warnung: Bei der Arbeit mit Polymerschläuchen unter Druck ist besondere Vorsicht angebracht:

- In der Nähe von unter Druck stehenden Polymerschläuchen stets Schutzbrille tragen.
- Alle offenen Flammen in der Nähe löschen.
- Keine Schläuche verwenden, die stark geknickt oder überbeansprucht sind.
- Nichtmetallische Schläuche nicht für Tetrahydrofuran (THF) oder konzentrierte Salpeter- oder Schwefelsäure verwenden.
- Durch Methylenchlorid und Dimethylsulfoxid können nichtmetallische Schläuche quellen; dadurch wird der Berstdruck des Schlauches erheblich reduziert.

Avvertenza: fare attenzione quando si utilizzano tubi in materiale polimerico sotto pressione:

- Indossare sempre occhiali da lavoro protettivi nei pressi di tubi di polimero pressurizzati.
- Spegnere tutte le fiamme vive nell'ambiente circostante.
- Non utilizzare tubi eccessivamente logorati o piegati.
- Non utilizzare tubi non metallici con tetraidrofurano (THF) o acido solforico o nitrico concentrati.
- Tenere presente che il cloruro di metilene e il dimetilsolfossido provocano rigonfiamenti nei tubi non metallici, riducendo notevolmente la pressione di rottura dei tubi stessi.

Advertencia: se recomienda precaución cuando se trabaje con tubos de polímero sometidos a presión:

- El usuario deberá protegerse siempre los ojos cuando trabaje cerca de tubos de polímero sometidos a presión.
- Apagar cualquier llama que pudiera haber encendida en las proximidades.
- No se debe trabajar con tubos que se hayan doblado o sometido a altas presiones.
- Es necesario utilizar tubos de metal cuando se trabaje con tetrahidrofurano (THF) o ácidos nítrico o sulfúrico concentrados.
- Hay que tener en cuenta que el cloruro de metileno y el sulfóxido de dimetilo dilatan los tubos no metálicos, lo que reduce la presión de ruptura de los tubos.

警告： 当有压力的情况下使用管线时，小心注意以下几点：

- 当接近有压力的聚合物管线时一定要戴防护眼镜。
- 熄灭附近所有的火焰。
- 不要使用已经被压瘪或严重弯曲的管线。
- 不要在非金属管线中使用四氢呋喃或浓硝酸或浓硫酸。
- 要了解使用二氯甲烷及二甲基亚枫会导致非金属管线膨胀，大大降低管线的耐压能力。

警告： 當在有壓力的情況下使用聚合物管線時，小心注意以下幾點。

- 當接近有壓力的聚合物管線時一定要戴防護眼鏡。
- 熄滅附近所有的火焰。
- 不要使用已經被壓癟或嚴重彎曲管線。
- 不要在非金屬管線中使用四氫呋喃或濃硝酸或濃硫酸。
- 要了解使用二氯甲烷及二甲基亞楓會導致非金屬管線膨脹，大大降低管線的耐壓能力。

경고: 가압 폴리머 튜브로 작업할 경우에는 주의하십시오.

- 가압 폴리머 튜브 근처에서는 항상 보호 안경을 착용하십시오.
- 근처의 화기를 모두 끄십시오.
- 심하게 변형되거나 꼬인 튜브는 사용하지 마십시오.
- 비금속(Nonmetallic) 튜브를 테트라히드로푸란(Tetrahydrofuran: THF) 또는 농축 질산 또는 황산과 함께 사용하지 마십시오.
- 염화 메틸렌(Methylene chloride) 및 디메틸술폭시드(Dimethyl sulfoxide)는 비금속 튜브를 부풀려 튜브의 파열 압력을 크게 감소시킬 수 있으므로 유의하십시오.

警告: 圧力のかかったポリマーチューブを扱うときは、注意してください。

- 加圧されたポリマーチューブの付近では、必ず保護メガネを着用してください。
- 近くにある火を消してください。
- 著しく変形した、または折れ曲がったチューブは使用しないでください。
- 非金属チューブには、テトラヒドロフラン(THF)や高濃度の硝酸または硫酸などを流さないでください。
- 塩化メチレンやジメチルスルホキシドは、非金属チューブの膨張を引き起こす場合があり、その場合、チューブは極めて低い圧力で破裂します。

This warning applies to Waters instruments fitted with nonmetallic tubing or operated with flammable solvents.

Warning: The user shall be made aware that if the equipment is used in a manner not specified by the manufacturer, the protection provided by the equipment may be impaired.

Avertissement : L’utilisateur doit être informé que si le matériel est utilisé d’une façon non spécifiée par le fabricant, la protection assurée par le matériel risque d’être défectueuses.

Warnung: Der Benutzer wird darauf aufmerksam gemacht, dass bei unsachgemäßer Verwendung des Gerätes die eingebauten Sicherheitseinrichtungen unter Umständen nicht ordnungsgemäß funktionieren.

Avvertenza: si rende noto all'utente che l'eventuale utilizzo dell'apparecchiatura secondo modalità non previste dal produttore può compromettere la protezione offerta dall'apparecchiatura.

Advertencia: el usuario deberá saber que si el equipo se utiliza de forma distinta a la especificada por el fabricante, las medidas de protección del equipo podrían ser insuficientes.

警告： 使用者必**须**非常清楚如果**设备**不是按照制造厂商指定的方式使用，那么**该设备**所提供的保**护**将被削弱。

警告： 使用者必須非常清楚如果設備不是按照製造廠商指定的方式使用，那麼該設備所提供的保護將被消弱。

경고: 제조업체가 명시하지 않은 방식으로 장비를 사용할 경우 장비가 제공하는 보호 수단이 제대로 작동하지 않을 수 있다는 점을 사용자에게 반드시 인식시켜야 합니다.

警告: ユーザーは、製造元により指定されていない方法で機器を使用すると、機器が提供している保証が無効になる可能性があることに注意して下さい。

A.6 Warnings that address the replacement of fuses

The following warnings pertain to instruments and devices equipped with user-replaceable fuses. Information describing fuse types and ratings sometimes, but not always, appears on the instrument or device.

Finding fuse types and ratings when that information appears on the instrument or device:

Warning: To protect against fire, replace fuses with those of the type and rating printed on panels adjacent to instrument fuse covers.

Avertissement : pour éviter tout risque d'incendie, remplacez toujours les fusibles par d'autres du type et de la puissance indiqués sur le panneau à proximité du couvercle de la boite à fusible de l'instrument.

Warnung: Zum Schutz gegen Feuer die Sicherungen nur mit Sicherungen ersetzen, deren Typ und Nennwert auf den Tafeln neben den Sicherungsabdeckungen des Geräts gedruckt sind.

Avvertenza: per garantire protezione contro gli incendi, sostituire i fusibili con altri dello stesso tipo aventi le caratteristiche indicate sui pannelli adiacenti alla copertura fusibili dello strumento.

Advertencia: Para evitar incendios, sustituir los fusibles por aquellos del tipo y características impresos en los paneles adyacentes a las cubiertas de los fusibles del instrumento.

警告： 为了避免火灾，应更换与仪器保险丝盖旁边面板上印刷的类型和规格相同的保险丝。

警告： 為了避免火災，更換保險絲時，請使用與儀器保險絲蓋旁面板上所印刷之相同類型與規格的保險絲。

경고: 화재의 위험을 막으려면 기기 퓨즈 커버에 가까운 패널에 인쇄된 것과 동일한 타입 및 정격의 제품으로 퓨즈를 교체하십시오.

警告: 火災予防のために、ヒューズ交換では機器ヒューズカバー脇のパネルに記載されているタイプおよび定格のヒューズをご使用ください。

Finding fuse types and ratings when that information does not appear on the instrument or device:

Warning: To protect against fire, replace fuses with those of the type and rating indicated in the “Replacing fuses” section of the Maintenance Procedures chapter.

Avertissement : pour éviter tout risque d'incendie, remplacez toujours les fusibles par d'autres du type et de la puissance indiqués dans la rubrique "Remplacement des fusibles" du chapitre traitant des procédures de maintenance.

Warnung: Zum Schutz gegen Feuer die Sicherungen nur mit Sicherungen ersetzen, deren Typ und Nennwert im Abschnitt "Sicherungen ersetzen" des Kapitels "Wartungsverfahren" angegeben sind.

Avvertenza: per garantire protezione contro gli incendi, sostituire i fusibili con altri dello stesso tipo aventi le caratteristiche indicate nel paragrafo "Sostituzione dei fusibili" del capitolo "Procedure di manutenzione".

Advertencia: Para evitar incendios, sustituir los fusibles por aquellos del tipo y características indicados en la sección "Sustituir fusibles".

警告： 为了避免火灾，应更换“维护步骤”一章的“更换保险丝”一节中介绍的相同类型和规格的保险丝。

警告： 為了避免火災，更換保險絲時，應使用「維護步驟」章節中「更換保險絲」所指定之相同類型與規格的保險絲。

경고: 화재의 위험을 막으려면 유지관리 절차 단원의 “퓨즈 교체” 절에 설명된 것과 동일한 타입 및 정격의 제품으로 퓨즈를 교체하십시오.

警告: 火災予防のために、ヒューズ交換ではメンテナンス項目の「ヒューズの交換」に記載されているタイプおよび定格のヒューズをご使用ください。

A.7 Electrical and handling symbols

A.7.1 Electrical symbols

The following electrical symbols and their associated statements can appear in instrument manuals and on an instrument’s front or rear panels.

Symbol	Description
	Electrical power on
	Electrical power off
	Standby
	Direct current
	Alternating current
3	Alternating current (three phase)
	Safety ground
	Frame or chassis terminal connection
	Fuse
	Functional ground
	Input
	Output
	Indicates that the device or assembly is susceptible to damage from electrostatic discharge (ESD)

A.7.2 Handling symbols

The following handling symbols and their associated statements can appear on labels affixed to the packaging in which instruments, devices, and component parts are shipped.

Symbol	Description
	Keep upright!
	Keep dry!

Symbol	Description
	Fragile!
	Use no hooks!
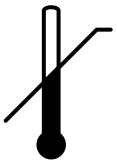	Upper limit of temperature
	Lower limit of temperature
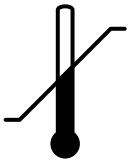	Temperature limitation

B Preparing the system for operation

Your instrument is ready to run following installation by a Waters service engineer. If you move the instrument and need to reconnect it, carry out the following procedures.

B.1 Rear panel connections

When making connections to the QDa detector's rear panel, refer to the figure in Appendix D (Page 90).

When making connections between the QDa detector's rear panel and the ACQUITY Diverter Valve's rear panel, refer to the figure in Diverter valve wiring (Page 126).

For details of supported inlet system configurations, contact Waters Technical Service.

B.2 Connecting the probe

To avoid puncture injuries from the sharp probe capillary, use care when inserting it into the source enclosure.

Warning: To avoid puncture injuries from the sharp probe capillary, use care when inserting it into the source enclosure.

Notice: To avoid damaging the fragile probe capillary, if the instrument is situated above eye level, disconnect the instrument's external connections and place it on a bench top or other surface so that you can exercise caution when inserting the probe (see Removing the source enclosure from the instrument (Page 26)).

Before starting the instrument, connect the LC flow to the probe.

To connect the probe:

1. Carefully insert the probe capillary into the inlet atop the source enclosure and tighten the probe fitting until it clicks.

Figure B–1: Inserting the probe

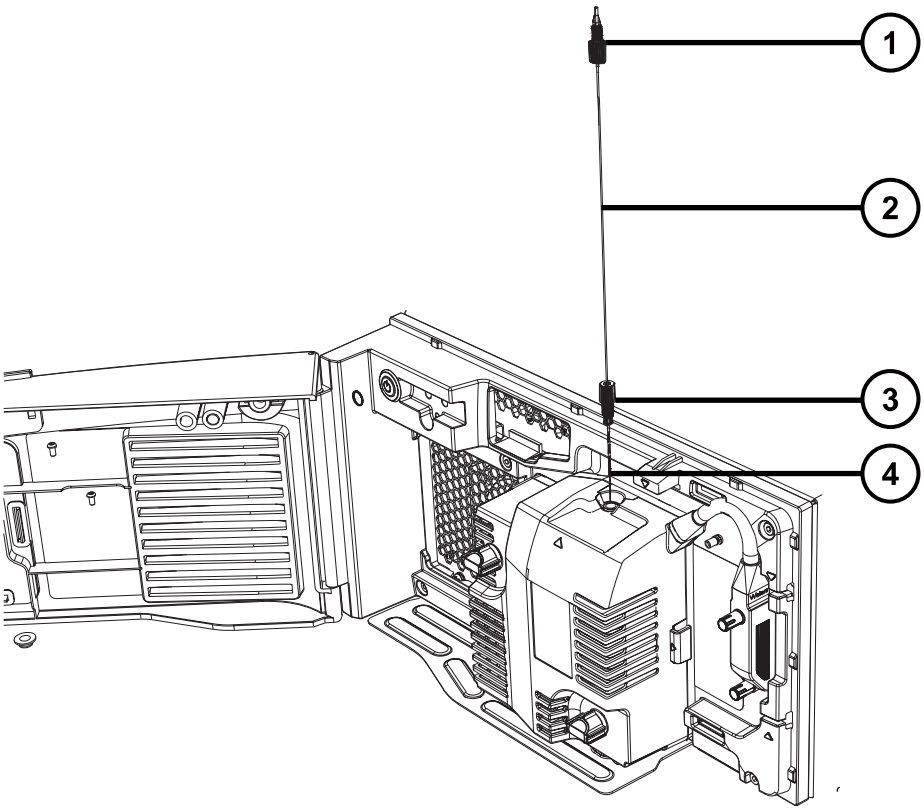

1. PEEK fitting
2. Probe capilary assembly
3. Probe fitting
4. Capillary

2. Fit the PEEK fitting end of the probe capillary assembly to the LC or syringe pump and secure it until finger-tight.
3. Secure the probe tubing to the side of the source enclosure using the clip.

B.3 Connecting to the electricity source

The ACQUITY QDa requires a separate, grounded electricity source. The ground connection in the electrical outlet must be common and connected near the system.

Warning: To avoid electric shock, observe these precautions:

- Use SVT-type power cords in the United States and HAR-type power cords, or better, in Europe. For requirements elsewhere, contact your local Waters distributor.
- Do not replace power cords with inadequately rated power cords.
- Inspect the power cords for damage and replace them if necessary.
- Power-off and unplug each module before performing any maintenance operation on it.
- Connect each module to a common ground.

To connect to the electricity source:

Recommendation: Use a line conditioner and uninterruptible power supply (UPS) for optimum long-term input voltage.

1. Connect the female end of the power cord to the receptacle on the rear panel of the detector.
2. Connect the male end of the power cord to a suitable wall outlet.

   Alternative: If your system includes the optional FlexCart, connect the female end of the cart's electrical cable (included in the start-up kit) to the receptacle on the rear panel of the instrument. Connect the hooded, male end of the cart's electrical cable to the power strip on the back of the cart. Finally, connect the power strip's cable to a wall outlet operating on its own circuit.

B.4 Starting the instrument

Warning: To avoid injury from electrical shock or fire, and damage to the equipment, follow these guidelines:

- Do not expose the workstation or ancillary equipment to dripping or splashing liquids.
- Do not place objects filled with liquid, such as solvent bottles, on top of the workstation or ancillary equipment.

Notice: To avoid causing severe damage to the instrument, use only compatible solvents.

Starting the instrument entails powering-on the ACQUITY workstation, logging into the workstation, powering-on the instrument and all other ACQUITY instruments, and starting the software.

Requirement: You must power-on and log in to the ACQUITY UPLC workstation first to ensure that it obtains the IP addresses of the system instruments.

To start the instrument:

Warning: To avoid igniting flammable solvents, never let the nitrogen supply pressure fall below 650 kPa (6.5 bar, 94 psi).

1. On the rear panel, ensure that the nitrogen supply is connected to the instrument's nitrogen inlet connection (see Rear panel connections (Page 75)).

   Requirement: The nitrogen must be dry and oil-free, with a purity of at least 95%. Regulate the supply at 650 to 700 kPa (6.5 to 7.0 bar, 94 to 102 psi).
2. Power-on the workstation and log in.
3. Press the power switches on the top left-hand sides of the ACQUITY system modules, including the QDa detector.

   Result: Each module establishes communications with the workstation.
4. Allow approximately five minutes for the instruments to establish communications.

   Tip: The power and status LEDs show steady green when the instruments have established communications.
5. On the workstation, start the software.

   Result: The instrument performs startup checks.
6. In the software, monitor the Instrument Console for messages and LED indications.

B.5 Stop flow

When the ACQUITY QDa Detector is switched into Standby mode, or a nitrogen gas failure is detected, the instrument sends a stop-flow signal to the LC. The stop-flow signal switches off all solvent flow from the LC in order to prevent damage to the ACQUITY QDa Detector. The message `Stop-flow active` appears in the ACQUITY Console when the stop-flow function is active.

Notice: To avoid damage to the instrument, ensure that solvent flow to the instrument can be stopped by checking that the Stop Flow external cable is correctly fitted (see the External connections appendix).

If the LC flow needs to be reestablished while the ACQUITY QDa Detector is in Standby mode, or when it is switched off, you must ensure that the instrument is removed from the solvent flow path.

Notice: To avoid irreparable damage to the instrument when it is in Standby mode or switched off, disconnect the instrument from the solvent flow path. If the instrument is connected to the LC via a diverter valve, ensure that the diverter valve is set to flow to waste.

C Specifications

The applicability of the following specifications depends on the conditions in individual laboratories. Refer to the *ACQUITY QDa Detector System Site Preparation Guide*, or contact the Waters Technical Service organization for additional information about the specifications.

C.1 Physical specifications

The following table lists the physical specifications for the ACQUITY QDa detector.

Table C–1: Physical specifications

Attribute	Standard QDa	Performance QDa
Height	21.6 cm	21.6 cm
Width	37.4 cm	37.4 cm
Depth	76.1 cm	64.6 cm
Weight	34 kg	29 kg

C.2 Environmental specifications

The following table lists the environmental specifications for the ACQUITY QDa detector.

Table C–2: Environmental specifications

Attribute	Specification
Operating temperature (performance is specified)	15 °C to 28 °C
Safe operating temperature (no damage or hazard)	4 °C to 40 °C
Operating humidity	20% to 80%, non-condensing

C.3 Electrical specifications

The following table lists the electrical specifications for the ACQUITY QDa detector.

Table C–3: Electrical specifications

Attribute	Specification
Protection class[a]	Class I
Overvoltage category[b]	II
Pollution degree[c]	2
Moisture protection[d]	IPX0
Line voltages, nominal	100 V to 240 V
Frequency	50/60 Hz
Maximum power draw	400 W

a. Protection Class I – The insulating scheme used in the instrument to protect from electrical shock. Class I identifies a single level of insulation between live parts (wires) and exposed conductive parts (metal panels), in which the exposed conductive parts are connected to a grounding system. In turn, this grounding system is connected to the third pin (ground pin) on the electrical power cord plug.

b. Overvoltage Category II – Pertains to instruments that receive their electrical power from a local level such as an electrical wall outlet.

c. Pollution Degree 2 – A measure of pollution on electrical circuits that can produce a reduction of dielectric strength or surface resistivity. Degree 2 refers only to normally nonconductive pollution. Occasionally, however, expect a temporary conductivity caused by condensation.

d. Moisture Protection – Normal (IPX0) – IPX0 means that no Ingress Protection against any type of dripping or sprayed water exists. The “X” is a placeholder that identifies protection against dust, if applicable.

C.4 Input/output specifications

The following table lists the input and output specifications for the ACQUITY QDa detector.

Table C–4: Input and output specifications (Continued)

Attribute	Specification
USB Ports	Maximum voltage: 5 V Maximum current: 1 A Transmission Rate: 480 Mbits/s
Com Port (RS232)	Baud rate 9600 8 bits, no parity, 1 stop bit (8-N-1)
Contact Closure Outputs (Stop Flow/Switch)	Maximum voltage: 30 V Maximum current: 0.5 A Maximum VA Rating: 3 W
Event Inputs (Inject Start/Event In)	Voltage threshold: 2.5 V Maximum input voltage: 100 V Minimum input voltage: -100 V Maximum current: 1.12 mA

Table C–4: Input and output specifications (Continued) (continued)

Attribute	Specification
Analog Out	Maximum output: +10 V Minimum output: -10 V Output current: 10 mA

D Materials of construction and compatible solvents

Warning: To avoid personal contamination with biologically hazardous, toxic, or corrosive materials, you must address any safety issues raised by the contents of this Appendix. Doing so confirms the integrity of the source exhaust system.

Warning: To avoid personal contamination with biologically hazardous, toxic, or corrosive materials, do not use cleaning or decontamination agents that might cause hazards as a result of reactions with parts of the instrument or materials contained within. Contact Waters Technical Service if you are unsure about the compatibility of cleaning or decontamination agents with the instrument.

Requirement: The lists of solvents presented in this appendix are not comprehensive. Some solvents might be chemically compatible with the ACQUITY QDa detector, though they are not referenced in the lists. Some solvents referenced in the lists, but used at higher concentrations than specified, might also be compatible with the instrument. Where solvents are used at higher concentrations than specified in the lists, it is important that you determine whether their use is compatible with the instrument.

Note: For information about solvent compatibility on instruments fitted with the Extended Solvent Compatible Kit, see the *ACQUITY QDa Detector: Extended Solvent Compatible Kit Quick Reference Card* (715005573).

D.1 Preventing contamination

For information on preventing contamination, refer to *Controlling Contamination in LC/MS Systems* (715001307). You can find this document on www.waters.com by clicking **Support** > **Support Documents and Downloads**.

D.2 Running Hexane and THF with the ACQUITY QDa Detector

Warning: To avoid or minimize exposure to harmful solvent vapors, locate your system inside a fume hood or walk-in chamber if you are using Hexane or THF. Hexane is a neurotoxin and THF can irritate eyes, skin, and mucous membranes, and cause harmful neurological effects.

D.3 QDa solvent compatibility (KAD)

Note: The solvent compatibility information in this section refers to the KAD version of the QDa detector, shown in the following figure:

Figure D–1: QDa detector (KAD)

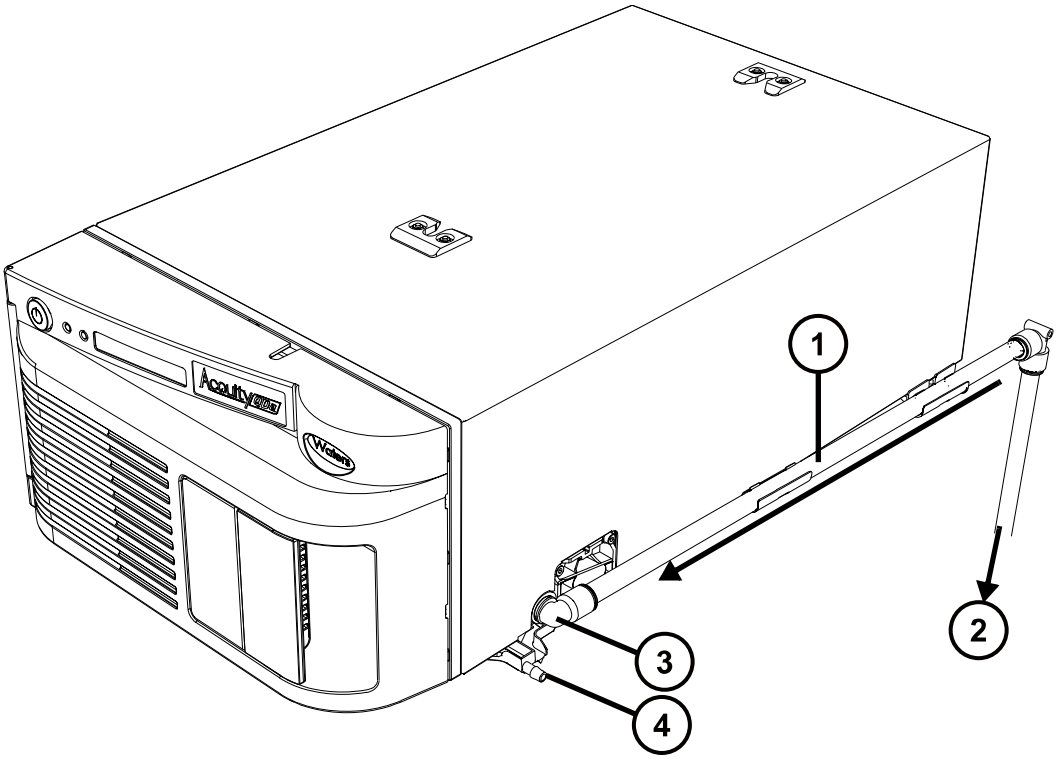

1. PTFE exhaust tubing
2. Exhaust trap bottle
3. Source exhaust tube elbow connector

(4) Waste liquid drip port

D.3.1 Items exposed to solvent

The items that appear in the following table can be exposed to solvent. You must evaluate the compatibility issues if the solvents used in your application differ from the solvents normally used with these items.

See Solvents used to prepare mobile phases (Page 84) for details about the most common ingredients used to prepare mobile phases.

Table D–1: Items exposed to solvent (KAD)

Item	Material
Gas exhaust port	Aluminum
Gas tubes	FEP (fluorinated ethylene propylene)
Ion block	Stainless steel
Ion block support	PEEK (polyetheretherketone)
O-rings	Viton or PTFE (polytetrafluoroethylene)-encapsulated Viton
Solvent waste/leak management	Fluorinated ethyline polymer (FEP) tubing
Source enclosure	Aluminum
Waste bottle	Polypropylene
Pumping Block gaskets	FEPM
Waste bottle push-in fittings	NBR (nitrile butadiene rubber), SST (stainless steel), PBT (polybutylene terephthalate), and POM (polyoxymethylene)

D.3.2 Solvents used to prepare mobile phases

The table below lists solvents and reagents used commonly to prepare mobile phase and, in some cases, act as sample diluents. They are not expected to adversely affect the performance of the materials shown in the table "Items exposed to solvent (KAD)" in Items exposed to solvent (Page 84).

Note: The list of solvents and chemicals and their associated concentrations shown below presents the levels that were tested, assessed, or both, for chemical compatibility with the materials of construction. It is not a recommendation for optimal electrospray sensitivity. Mobile-phase component concentration affects electrospray efficiency and sensitivity. Keep modifier and buffer concentrations to the lowest levels that maintain chromatographic resolution.

Notice: For LC/MS operation, do not prepare mobile phases using normal-phase solvents like hexane. Such solvents adversely affect the performance of the materials named in the list of items exposed to solvents (see Items exposed to solvent (Page 84)) and you should not use them unless at or below the concentrations specified. If you use the solvents at reduced concentrations as additives to mobile phases or as sample diluents, you must evaluate the consequent compatibility issues.

Table D–2: Solvents and modifiers used to prepare mobile phases (KAD)

Solvent/modifier	100%
Water	100%
Methanol	100%
Acetonitrile	100%
Ethanol	100%
Isopropanol	100%
Propanol	100%
Formic acid	≤0.5%
Acetic acid	≤1%
Trifluoroacetic acid (TFA)	≤0.2%
Ammonium hydroxide	≤1%
Ammonium formate	≤50 mM
Ammonium acetate	≤50 mM
Ammonium bicarbonate	≤50 mM
Tetrahydrofuran (THF)	≤15%

D.3.3 Solvents used infrequently

The following reagents are used less frequently with electrospray ionization than those listed in the previous table because they decrease sensitivity. However, they are often required for suitable chromatographic resolution.

Note: At the concentrations specified below, the reagents are not expected to adversely affect the performance of the materials shown in the list of items exposed to solvents in Items exposed to solvent (Page 84). However, you must keep concentrations to the lowest levels that maintain chromatographic resolution.

Table D–3: Solvents used infrequently

Solvent/modifier	Concentration
Diethylamine (DEA)	≤0.5%
Triethylamine (TEA)	≤0.5%

Table D–3: Solvents used infrequently (continued)

Solvent/modifier	Concentration
Hexafluoroisopropanol (HFIP)	≤5%
Hexyl Ammonium Acetate	≤50 mM

D.3.4 Solvents used commonly as diluents

The following solvents, often used as sample diluents, are not expected to adversely affect the performance of the materials shown in the list of items exposed to solvents in the table "Items exposed to solvent (KAD)" in the topic Items exposed to solvent (Page 84).

Table D–4: Solvents used commonly as diluents

Solvent/modifier	Concentration
Toluene	≤ 5%
Methyl tert-butyl ether (MTBE)	≤ 5%
Hexane	≤ 5%
Dichloromethane	≤ 2%
Dimethylformamide (DMF)	≤ 5%
Dimethyl sulfoxide (DMSO)	≤ 5%
Heptane	≤ 5%

D.4 QDa solvent compatibility (KAB)

Note: The solvent compatibility information in this section refers to the KAB version of the QDa detector, shown in the following figure:

Figure D–2: QDa detector (KAB)

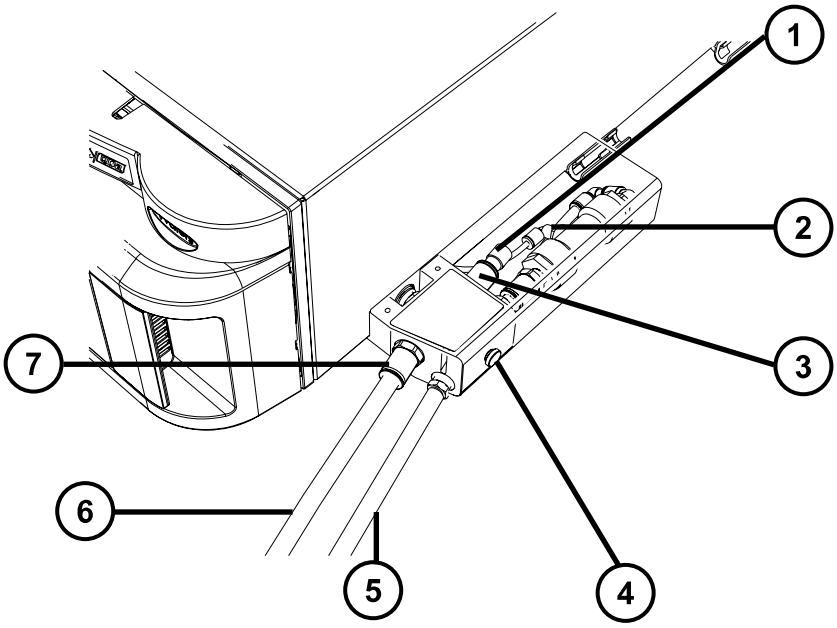

1. Exhaust tubing
2. API gas connection
3. Source exhaust connection
4. Holding screws
5. Convoluted liquid waste tubing
6. Blanking fitting
7. Unused source exhaust connection

Note: The assembly cover is depicted as transparent to reveal the tubing connections.

D.4.1 Items exposed to solvent

The items that appear in the following table can be exposed to solvent. You must evaluate the compatibility issues if the solvents used in your application differ from the solvents usually used with these items. See Solvents used to prepare mobile phases (Page 88) for details about the ingredients used most commonly to prepare mobile phases.

Table D–5: Items exposed to solvent (KAB)

Item	Material
Gas exhaust port	Aluminium
Gas tubes	FEP (fluorinated ethylene propylene)
Ion block	Stainless steel
Ion block support	PEEK (polyetheretherketone)
O-rings	Viton or PTFE (polytetrafluoroethylene)-encapsulated Viton
Solvent waste/leak management	Tygon tubing
Source enclosure	Aluminium
Waste bottle	Polypropylene
Waste bottle push-in fittings	NBR (nitrile butadiene rubber), SST (stainless steel), PBT (polybutylene terephthalate), and POM (polyoxymethylene)

D.4.2 Solvents used to prepare mobile phases

The following solvents and chemicals, which are used commonly to prepare mobile phase, and in some cases act as sample diluents, are not expected to adversely affect the performance of the materials shown in the table in Items exposed to solvent (Page 87).

Notes:

- The list of solvents and chemicals and their associated concentrations shown below presents the levels that were tested, assessed, or both, for chemical compatibility with the materials of construction. It is not a recommendation for optimal electrospray sensitivity. Mobile-phase component concentration affects electrospray efficiency and sensitivity. Keep modifier and buffer concentrations to the lowest levels that maintain chromatographic resolution.
- The solvents shown in the table below do not comprise a comprehensive listing. Some solvents might be chemically compatible with the ACQUITY QDa detector, though they are not referenced in the lists. Some solvents that are referenced in the lists, but used at higher concentrations than specified, might also be compatible with the instrument. In such cases, you must determine the compatibility of the solvents before using them. Where solvents are used at higher concentrations than specified in the lists, it is important that you determine whether their use is compatible with the instrument.

Notice: For LC/MS operation, do not prepare mobile phases using tetrahydrofuran (THF) and normal-phase solvents like hexane. Such solvents adversely affect the performance of the materials named in the list of items exposed to solvents (see Items exposed to solvent (Page 87)). If the solvents are used at reduced concentrations as additives to mobile phases or as sample diluents, you must evaluate the consequent compatibility issues.

Table D–6: Solvents used to prepare mobile phases (KAB)

Solvent/modifier	Concentration
Water	100%
Methanol	100%
Acetonitrile	100%
2-Propanol	100%
Formic acid	≤0.1%
Acetic acid	≤0.1%
Trifluoroacetic acid (TFA)	≤0.1%
Ammonium hydroxide	≤0.2%
Ammonium formate	≤10 mM
Ammonium acetate	≤10 mM
Ammonium bicarbonate	≤10 mM

E External connections

This appendix describes the instrument’s external connections.

Warning: To avoid spinal and muscular injury, do not attempt to lift a system module without assistance.

Notice: To avoid equipment damage caused by lifting, do not use the source drain manifold to lift the instrument.

Notice: To avoid damaging system modules, contact Waters Technical Service before moving the modules. If you must transport a system component or remove it from service, contact Waters Technical Service for recommended cleaning, flushing, and packaging procedures.

E.1 External wiring and vacuum connections

When making connections to the instrument's rear panel, refer to the following figure.

Figure E–1: Rear panel connections

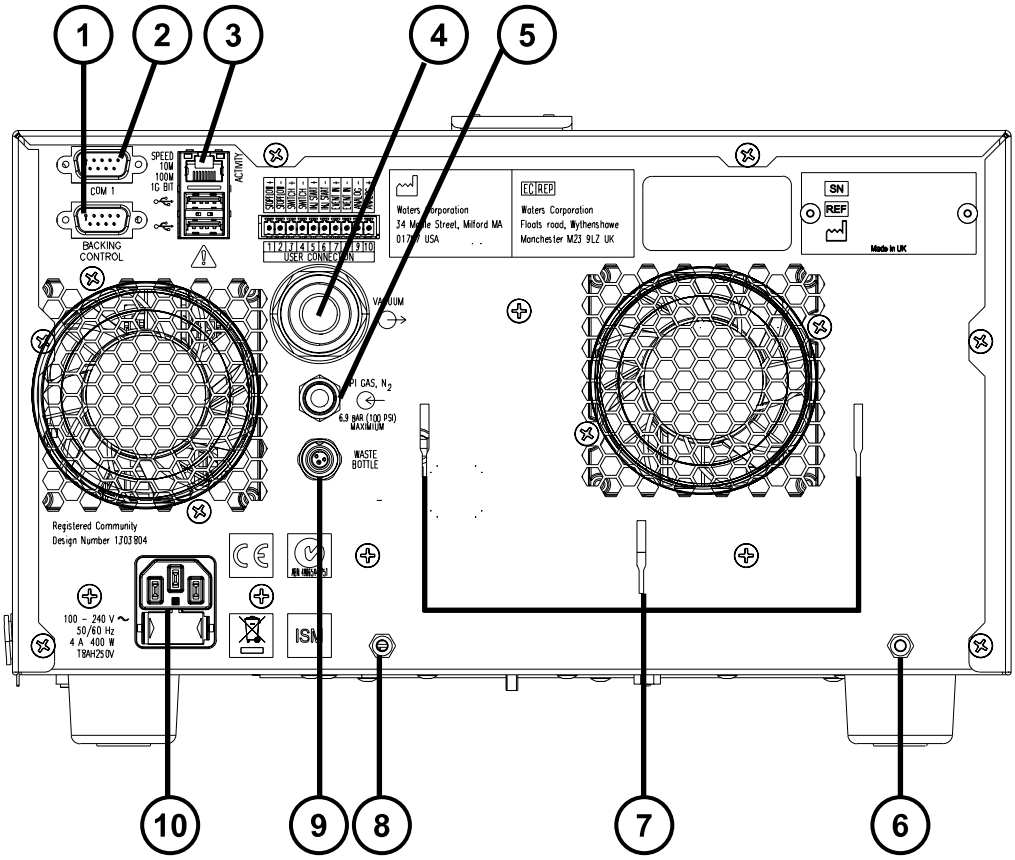

1. Backing pump control
2. Service port
3. Ethernet port
4. Vacuum pump tubing
5. Nitrogen inlet
6. Diaphragm pump securing screw
7. Diaphragm pump support slots
8. Diaphragm pump securing screw
9. Waste bottle solenoid control
10. Power cable

For details of supported system configurations, contact Waters Technical Service.

E.2 Connecting the Standard instrument's backing pump

The Standard instrument uses a diaphragm pump attached to the back of the instrument.

Note: To connect the Performance instrument's backing pump, see Connecting the Performance instrument's backing pump (Page 92).

Required materials

- Chemical-resistant, powder-free gloves
- Phillips screwdriver
- Diaphragm vacuum hose (included in the installation kit)

Warning: To avoid personal contamination with biologically hazardous or toxic compounds, wear clean, chemical-resistant, powder-free gloves when performing this procedure.

To connect the diaphragm pump:

1. Hook the pump onto the three diaphragm pump supports on the rear of the instrument, shown in the figure "Rear panel connections" (see External wiring and vacuum connections (Page 90)).
2. Secure the pump to the instrument using the two screws and tighten them using the Phillips (cross-head) screwdriver.
3. Connect the diaphragm pump's vacuum hose to the 1-inch OD straight vacuum port on the instrument's rear panel, shown as item 4 in the figure "Rear panel connections" (see External wiring and vacuum connections (Page 90)).
4. Route the open end of the exhaust tubing to a suitable waste container.
5. Connect the diaphragm pump cable to the backing pump connector on the instrument's rear panel shown in the figure "Rear panel connections" (see External wiring and vacuum connections (Page 90)).

   Requirement: When using the diaphragm pump, ensure that the 0.09-mm entrance-aperture disc is installed.

E.3 Connecting the Performance instrument's backing pump

Note: To connect the Standard instrument's backing pump, see Connecting the Standard instrument's backing pump (Page 92).

Figure E–2: Connecting the backing pump

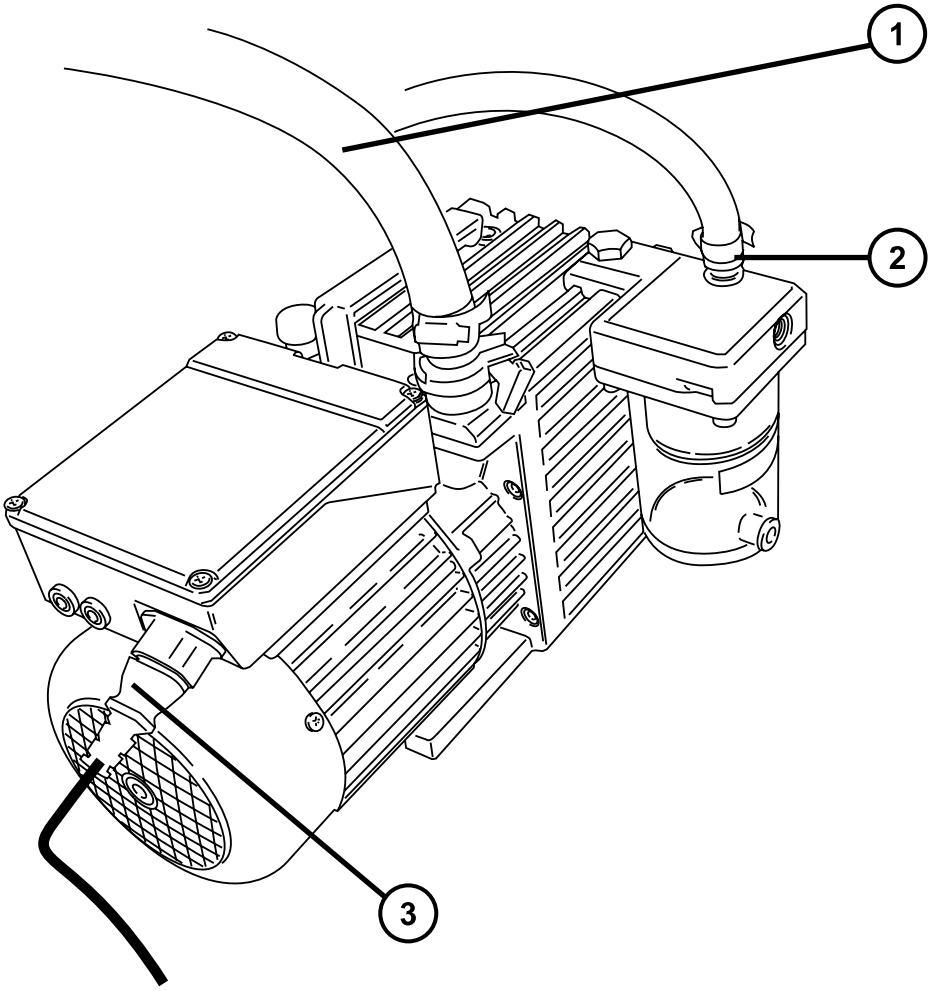

1 Vacuum hose assembly

2 Exhaust port

3 Power cable

Required materials

- Chemical-resistant, powder-free gloves
- 7-mm nut driver
- 8-mm hex wrench
- Utility knife
- NW16 clamp (included in the installation kit)
- NW16 O-ring (included in the installation kit)

- Optional PVC exhaust tubing (included in the installation kit)
- PVC hose clamps (included in the installation kit)
- 1-inch ID vacuum hose (included in the installation kit)

Warning: To avoid personal contamination with biologically hazardous or toxic compounds, wear clean, chemical-resistant, powder-free gloves when performing this procedure.

Notice: To ensure the correct operation of the backing pump, it must be installed within one degree of horizontal.

Notice: The area where the backing pump is located must have an ambient temperature of 15 to 40 ºC (59 to 104 ºF).

Note: To ensure proper ventilation, the pump must be installed with the following minimum clearances:

Figure E–3: Backing pump clearance

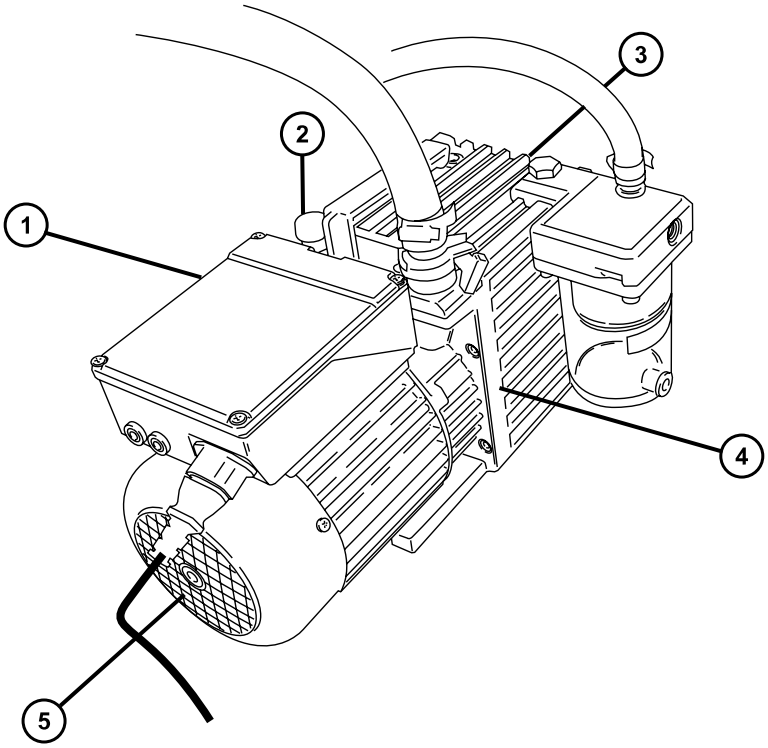

1. Left-side minimum clearance is 15.24 cm (6 inches)
2. Gas ballast valve
3. Back-side minimum clearance is 15.24 cm (6 inches)

(4) Right-side minimum clearance is 15.24 cm (6 inches)

(5) Front-side minimum clearance is 35.56 cm (14 inches)

To connect the backing pump:

1. Place a suitable PTFE drip tray on the floor within five feet of the instrument.

   Requirement: The pump must be oriented in a way that allows easy daily access to the gas ballast valve and oil-level sight glass.
2. Place the pump on the PTFE drip tray.
3. Use the NW16 center ring and clamp to attach the flanged end of a length of 1-inch ID vacuum hose to the vacuum port on the pump.
4. Push the opposite end of the length of 1-inch vacuum hose in step 3 into the 1-inch OD straight vacuum port on the instrument's rear panel.

   Note: To avoid gas leaks, use the sharp knife to cut the PVC exhaust tubing squarely (that is, perpendicular to its horizontal axis).
5. Use a hose clamp to connect a length of 19-mm clear PVC exhaust tubing to the pump exhaust port.

   Notice: The instrument requires two separate exhaust systems: one for nitrogen, the other for the backing pump. Vent them to atmosphere through separate exhaust lines. Oil mist can severely damage the instrument if the nitrogen exhaust line connects with the backing pump exhaust line. Your warranty does not cover damage caused by routing exhaust lines incorrectly.
6. Route the open end of the exhaust tubing to a suitable exhaust vent.

   Note: To ensure correct operation of the pump, do not operate it with the oil level at less than 30% of the MAX level.
7. Inspect the oil level in the pump (see Maintaining the rotary backing pump's oil (Page 55)).
8. Make the electrical connections to the rotary backing pump (see Making the electrical connections to the rotary backing pump (Page 96)).

E.3.1 Making the electrical connections to the rotary backing pump

Figure E–4: Backing pump electrical connections

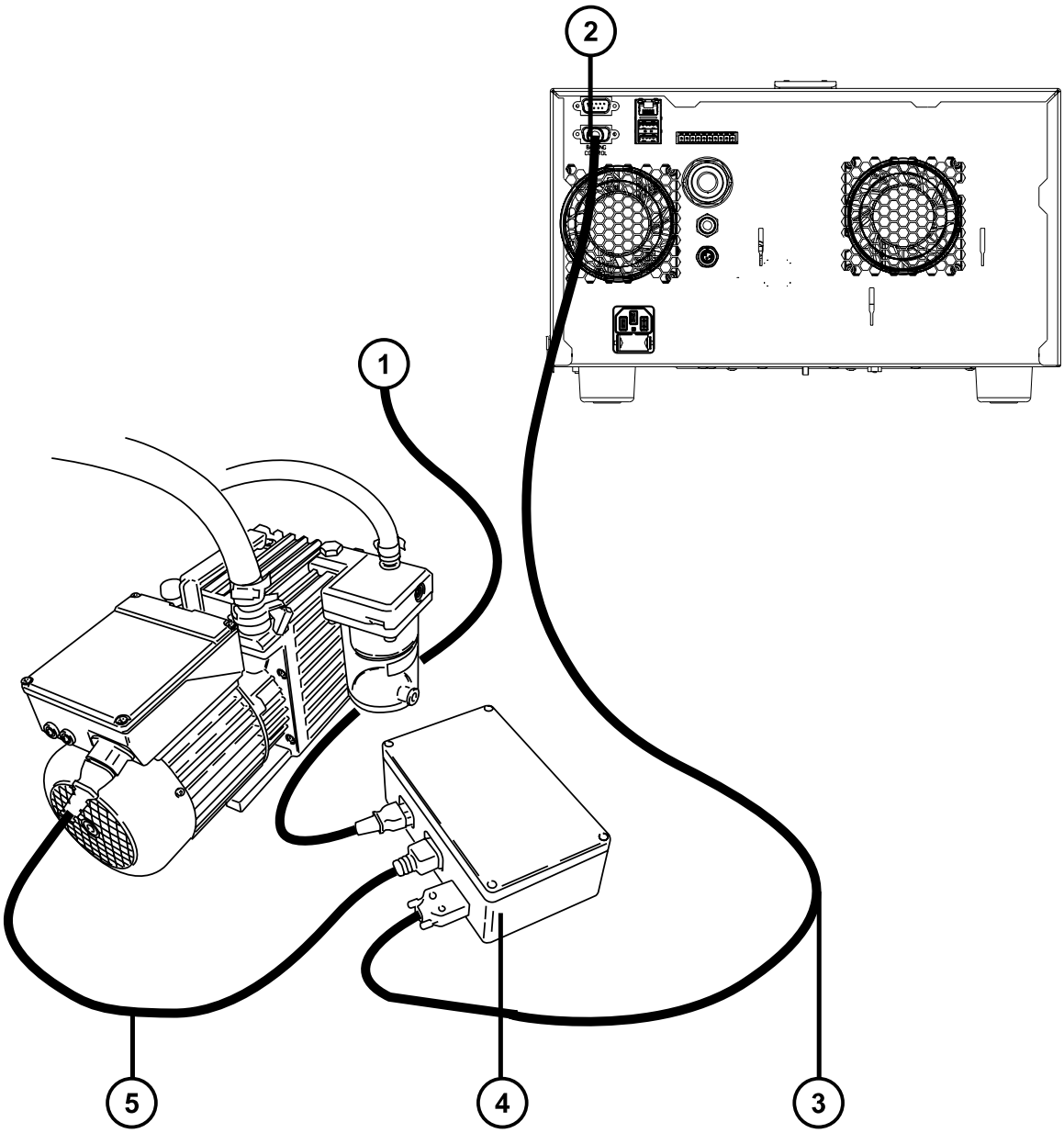

1. To power source
2. Backing pump connector
3. Pump control cable
4. Pump switching box

(5) Power cable

To make the electrical connections to the rotary backing pump:

1. Connect the pump control cable from the pump switching box to the backing pump connector on the instrument's rear panel.
2. Connect the rotary backing pump power cord to the pump switching box.
3. Connect the pump switching box power cord to the main power source and use the power switch on the pump to power it on.

   Tip: The relay box allows the instrument to remotely control the backing pump.

E.4 Connecting to the nitrogen gas supply

Required materials

- Chemical-resistant, powder-free gloves
- Utility knife
- Wrench
- 6-mm PTFE tubing (included in the installation kit)
- 6-mm stud
- Nitrogen regulator

To connect the nitrogen gas supply:

Requirement: Wear clean, chemical-resistant, powder-free gloves when performing this procedure.

Notice: To avoid gas leaks, use the tube cutter to cut the PTFE tubing squarely.

1. Use the utility knife to cut a length of 6-mm PTFE tubing long enough to connect the rear of the instrument to the nitrogen regulator.
2. Connect one end of the 6-mm PTFE tubing to the nitrogen inlet port on the rear of the instrument (see Connecting the Standard instrument's backing pump (Page 92)).
3. Attach the nitrogen regulator to the nitrogen supply.
4. Install the 6-mm stud into the regulator outlet.

Figure E–5: 6-mm stud

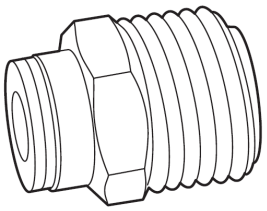

5. Connect the free end of the long piece of 6-mm PTFE tubing to the 6-mm stud.

   Requirement: The nitrogen must be dry and oil-free, with a purity of at least 95%. Regulate the supply at 650 to 700 kPa (6.5 to 7.0 bar, 94 to 102 psi).

E.5 Connecting and disconnecting the external source exhaust valve assembly (KAB)

Replace the source exhaust valve annually, or when a source pressure test fails and all other causes of failure have been investigated.

The following procedures apply to instruments fitted with the external source exhaust valve assembly (serial number suffix “KAB”). If the model of your QDa supports the internal source exhaust valve assembly (serial number suffix "KAD"), see the procedures in Connecting and disconnecting the internal source exhaust valve assembly (KAD) (Page 101).

Note: See Identifying your instrument version (Page 21) for guidance on identifying the version of your QDa to determine the appropriate procedures to follow for configuring the valve connections on your instrument.

E.5.1 Connecting the external source exhaust valve assembly (KAB)

Before powering-on the QDa detector, you must connect the assembly.

Required materials

- Chemical-resistant, powder-free gloves

To connect the source exhaust valve assembly:

Requirement: Wear clean, chemical-resistant, powder-free gloves when performing this procedure.

1. Connect the valve assembly to the instrument’s push-in source exhaust outlet (for more information, see the figure "External source exhaust valve assembly—rear configuration" on step 4).
2. Connect the waste tubing to the valve assembly as follows:

- Connect the API tubing to the API gas connection.
- Connect the convoluted liquid waste tubing to the liquid drain port.

  Notice: To prevent solvent leaks and resultant damage to the instrument, ensure that the entire PTFE waste line, from the instrument to the exhaust-trap bottle, follows a continuous, downward gradient, without loops or areas of compression.

- Connect the exhaust tubing to either the front or rear source exhaust connection to suit your configuration.

  Tip: To determine which configuration you are using, see the configuration figures beginning at the topic Connecting the external source exhaust valve assembly (KAB) (Page 98) and ending at the topic Connecting the exhaust solenoid cable (Page 115).

3. Fit the unused exhaust connection with a blanking fitting.
4. Slide the cover onto the valve assembly and secure it with the holding screw.

Figure E–6: External source exhaust valve assembly—rear configuration

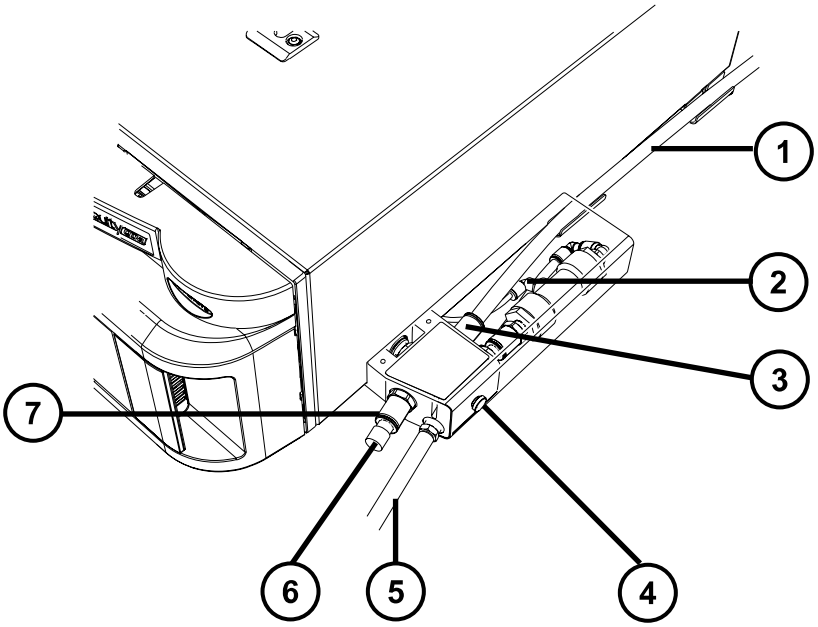

1. Exhaust tubing
2. API gas connection
3. Source exhaust connection
4. Holding screw
5. Convoluted liquid waste tubing
6. Blanking fitting

7 Unused source exhaust connection

Note: In the figure, the assembly cover is depicted as transparent to reveal the tubing connections.

Figure E–7: External source exhaust valve assembly—front configuration

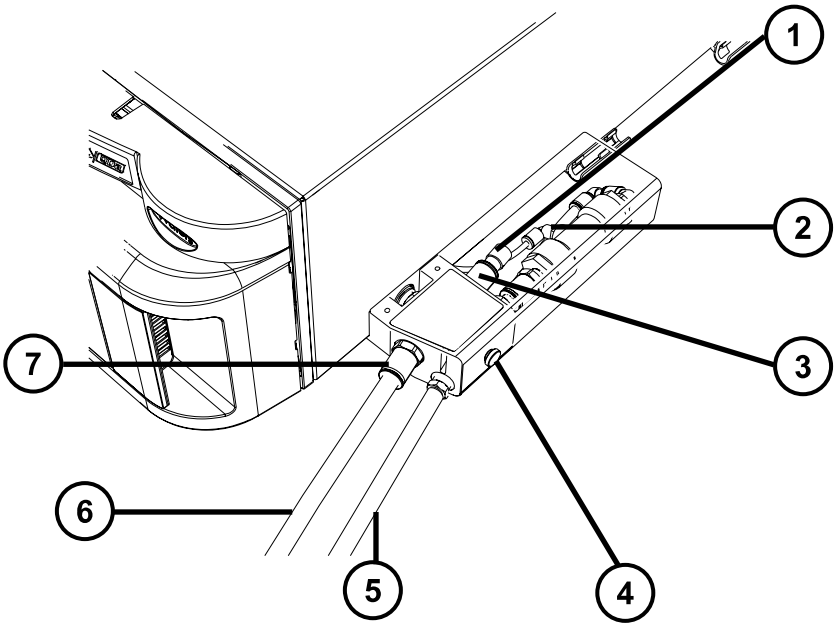

1 Blanking fitting

2 API gas connection

3 Unused source exhaust connection

4 Holding screw

5 Convoluted liquid waste tubing

6 Exhaust tubing

7 Source exhaust connection

Note: In the figure, the assembly cover is depicted as transparent to reveal the tubing connections.

E.5.2 Disconnecting the external source exhaust valve assembly

Notice: To prevent damage to the instrument, do not use the valve assembly to lift the instrument.

When moving the QDa detector, you must remove the source exhaust valve assembly. Perform the following procedure to disconnect the assembly.

Required materials

- Chemical-resistant, powder-free gloves

To disconnect the external source exhaust valve assembly:

Requirement: Wear clean, chemical-resistant, powder-free gloves when performing this procedure.

1. Remove the valve assembly's holding screw and slide the cover away from the instrument.
2. Disconnect the convoluted liquid waste tubing, API tubing, and exhaust tubing from the valve assembly.
3. Disconnect the valve assembly by pushing on the Legris fitting and then sliding the valve away from the instrument.

E.6 Connecting and disconnecting the internal source exhaust valve assembly (KAD)

Replace the source exhaust valve annually, or when a source pressure test fails and all other causes of failure have been investigated.

The following procedures apply to instruments fitted with the internal source exhaust valve assembly (serial number suffix "KAD"). If the model of your QDa supports the external source exhaust valve assembly (serial number suffix "KAB"), see the procedures in Connecting and disconnecting the external source exhaust valve assembly (KAB) (Page 98).

Note: See Identifying your instrument version (Page 21) for guidance on identifying the version of your QDa to determine the appropriate procedures to follow for configuring the valve connections on your instrument.

E.6.1 Connecting the internal source exhaust valve

Before powering-on the QDa detector, you must connect the source exhaust valve.

Required materials

- Chemical-resistant, powder-free gloves

To connect the source exhaust valve assembly:

Requirement: Wear clean, chemical-resistant, powder-free gloves when performing this procedure.

1. To connect the tubing in a rear configuration, ensure that the 90-degree elbow connector on the source exhaust valve is rotated to point toward the rear of the instrument, as shown in the figure below.

   Note: For a front configuration, see the figure "Internal source exhaust valve—front configuration" in step 3.

2. Thread the PTFE waste tubing alongside the instrument through the two hose brackets, from the back end toward the elbow connector.

   Note:

   - Routing the exhaust tubing through the hose brackets positions the tubing at a downward gradient. Doing so prevents the pooling of solvents.
   - To prevent the pooling of solvents in a front configuration, ensure that the source exhaust tubing is positioned forward and in a downward gradient.

3. Insert the end of the tubing into the source exhaust valve elbow connector.

Figure E–8: Internal source exhaust valve—rear configuration

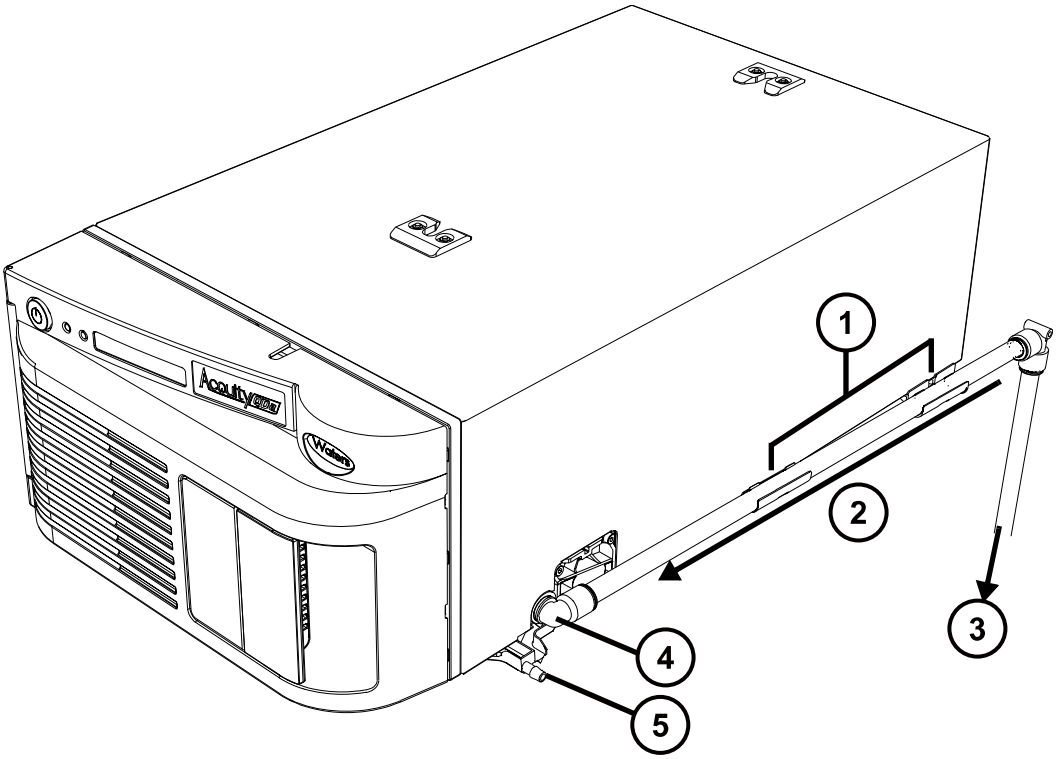

(1) Exhaust hose brackets

(2) PTFE exhaust tubing

(3) Exhaust trap bottle

(4) Source exhaust tube elbow connector

5 Waste liquid drain port

Figure E–9: Internal source exhaust valve—front configuration

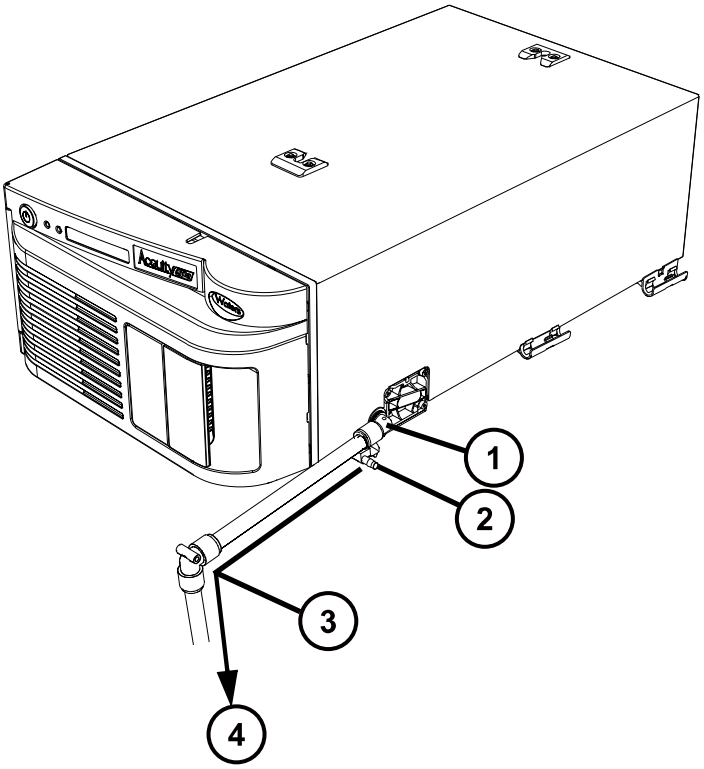

1 Source exhaust tube elbow connector

2 Waste liquid drain port

3 PTFE source exhaust tube and elbow connector (ensure a downward gradient)

4 Exhaust trap bottle

E.6.2 Disconnecting the internal source exhaust valve

When moving the QDa detector, you must disconnect the source exhaust valve tubing. Perform the following procedure to disconnect the tubing.

Note: On Standard QDa detectors, ensure that you disconnect the 6-mm O.D. tube from the diaphragm pump's 6-mm elbow to the 2.5-L bottle-stopper assembly (shown in the figure "Waste connections" in Connecting the 2.5-L waste container (Page 111)).

Required materials

- Chemical-resistant, powder-free gloves

To disconnect the internal source exhaust valve tubing:

Requirement: Wear clean, chemical-resistant, powder-free gloves when performing this procedure.

1. Disconnect the source exhaust PTFE tubing from the 90-degree elbow connector on the source exhaust valve.
2. Remove the tubing from the hose brackets alongside the QDa panel (if the tubing is in a rear-facing configuration).
3. Disconnect the drain tubing from the waste-liquid drain port.

E.7 Source exhaust tubing

E.7.1 Connecting the exhaust-trap bottle

Perform the following procedure to install and connect an exhaust-trap bottle to the instrument (see Exhaust trap bottle (Page 115)).

Required materials

- Chemical-resistant, powder-free gloves
- Utility knife
- 90-degree push-in elbow (410004340)
- 90-degree elbow (410002348)
- 12-mm PTFE tubing (6070283)

Warning: To avoid personal contamination with biologically hazardous, toxic, and corrosive materials, wear chemical-resistant, powder-free gloves when performing this procedure.

To connect the exhaust-trap bottle:

1. Place the exhaust-trap bottle in the protective bottle stand, and then position the assembly in a readily accessible location below the ACQUITY QDa.
2. Cut the 12-mm PTFE tubing into three lengths (see the figure "External source exhaust valve assembly" in Connecting the external source exhaust valve assembly (KAB) (Page 98)).

Important:

- Cut one piece of tubing so that it is approximately the length of the instrument.
- Cut the second piece of tubing to extend from the bottom of the instrument to the exhaust trap bottle.
- Cut the third piece of tubing to extend from the exhaust-trap bottle to the laboratory's exhaust system.

3. Connect the first length of 12-mm PTFE tubing to the source exhaust valve assembly (see Connecting and disconnecting the external source exhaust valve assembly (KAB) (Page 98)), and then thread the tube through the hose brackets running alongside the instrument to ensure a downward gradient.

   Tip: The downward gradient ensures that solvent flows freely into the trap bottle.

4. Connect the 90-degree elbow to the free end of the PTFE tubing that runs alongside the instrument.
5. Connect the second length of PTFE tubing to the other end of the 90-degree elbow.

   Notice: To prevent solvent leaks and resultant damage to the instrument, ensure that the entire PTFE waste line, from the instrument to the exhaust-trap bottle, follows a continuous, downward gradient, without loops or areas of compression.

6. Connect the free end of the second length of PTFE tubing to the inlet of the exhaust-trap bottle.
7. Use the third length of PTFE tubing to connect the exhaust-trap bottle's outlet to the laboratory exhaust system (see the figure "External source exhaust valve assembly" in Connecting the external source exhaust valve assembly (KAB) (Page 98) for a complete exhaust configuration).

Figure E–10: Rear configuration without LC stack or bottom of stack

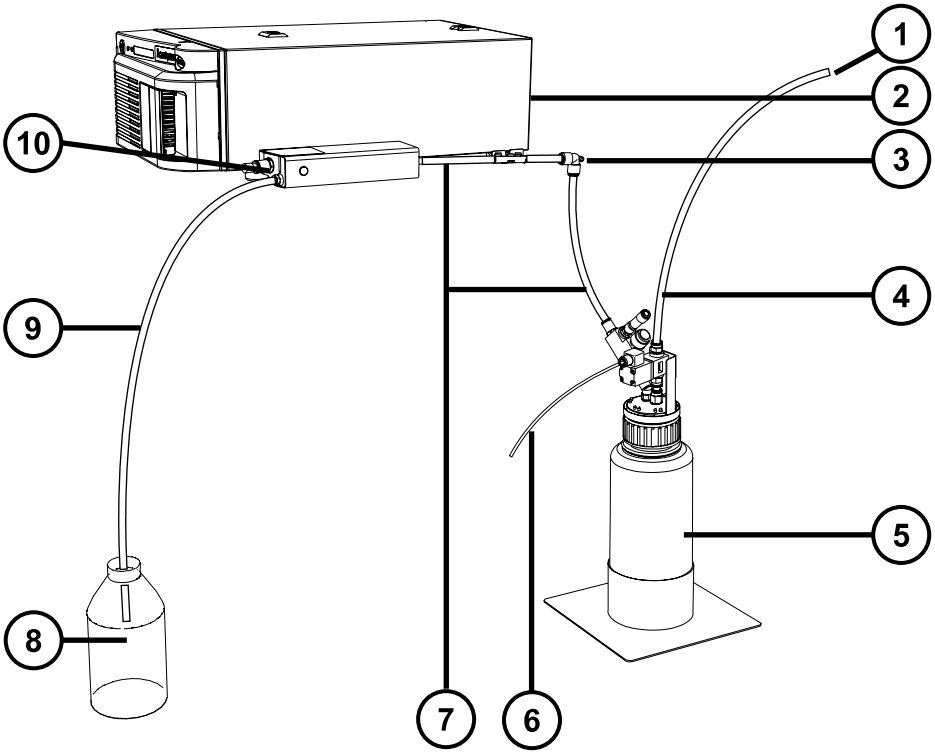

1. To laboratory exhaust system
2. ACQUITY QDa
3. 90-degree elbow
4. PTFE tubing
5. Exhaust-trap bottle
6. Exhaust solenoid cable
7. PTFE tubing (ensure downward gradient)
8. Liquid waste container
9. Convoluted liquid waste tubing
10. Source exhaust valve assembly

Tip: This figure shows a QDa detector fitted with the external source exhaust valve assembly (serial number suffix "KAB"). To see the QDa detector fitted with the internal source exhaust valve (serial number suffix "KAD"), see the figures "Internal source exhaust

valve—rear configuration" and "Internal source exhaust valve—front configuration" in Connecting the internal source exhaust valve (Page 101).

Figure E–11: Rear configuration with LC stack

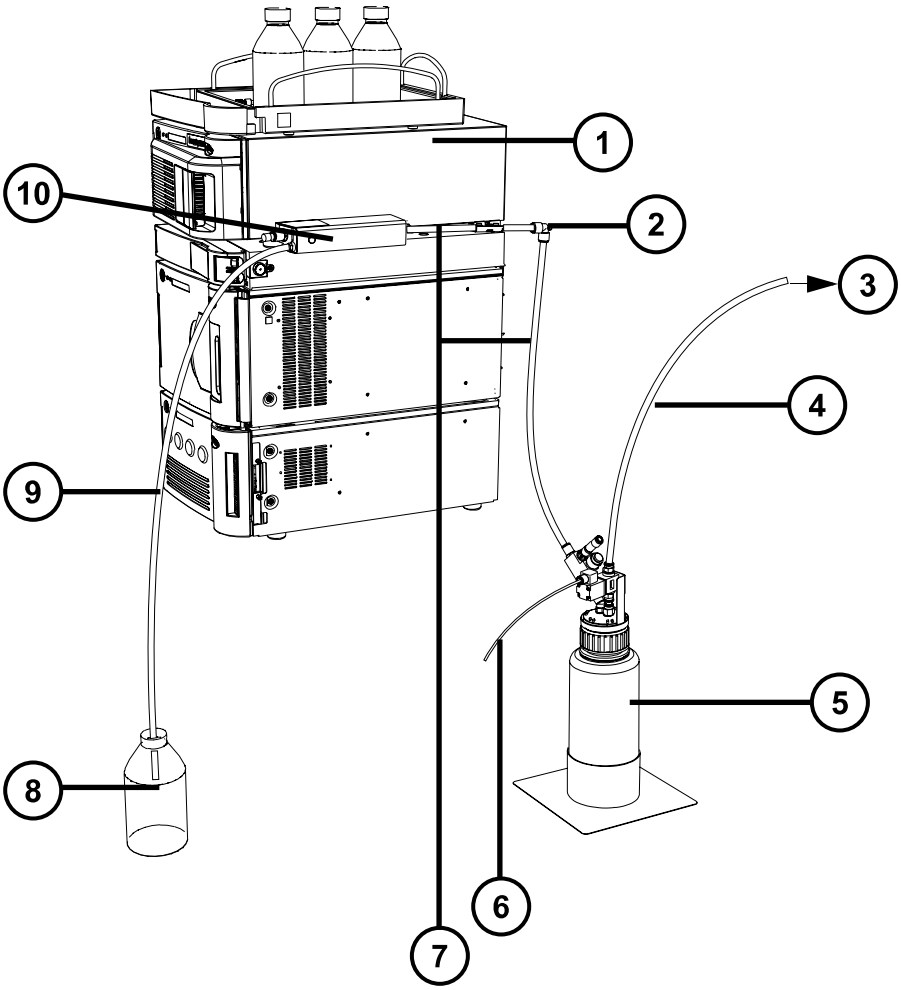

1. ACQUITY QDa
2. 90-degree elbow
3. To laboratory exhaust system
4. PTFE tubing
5. Exhaust-trap bottle
6. Exhaust solenoid cable
7. PTFE tubing (ensure downward gradient)

8 Liquid waste container

9 Convoluted liquid waste tubing

10 Source exhaust valve assembly

Tip: This figure shows a QDa detector fitted with the external, source exhaust valve assembly (serial number suffix "KAB"). To see the QDa detector fitted with the internal, source exhaust valve (serial number suffix "KAD"), see the figures "Internal source exhaust valve—rear configuration" and "Internal source exhaust valve—front configuration" in Connecting the internal source exhaust valve (Page 101).

E.7.2 Alternate configurations

Notice: To prevent solvent leaks and resultant damage to the instrument, ensure that the entire PTFE waste line, from the instrument to the exhaust-trap bottle, follows a continuous, downward gradient, without loops or areas of compression.

You can adopt an exhaust configuration presented in this section if it better suits your needs than the configurations detailed on Connecting the external source exhaust valve assembly (KAB) (Page 98).

Figure E–12: Front configuration without LC stack or bottom of stack

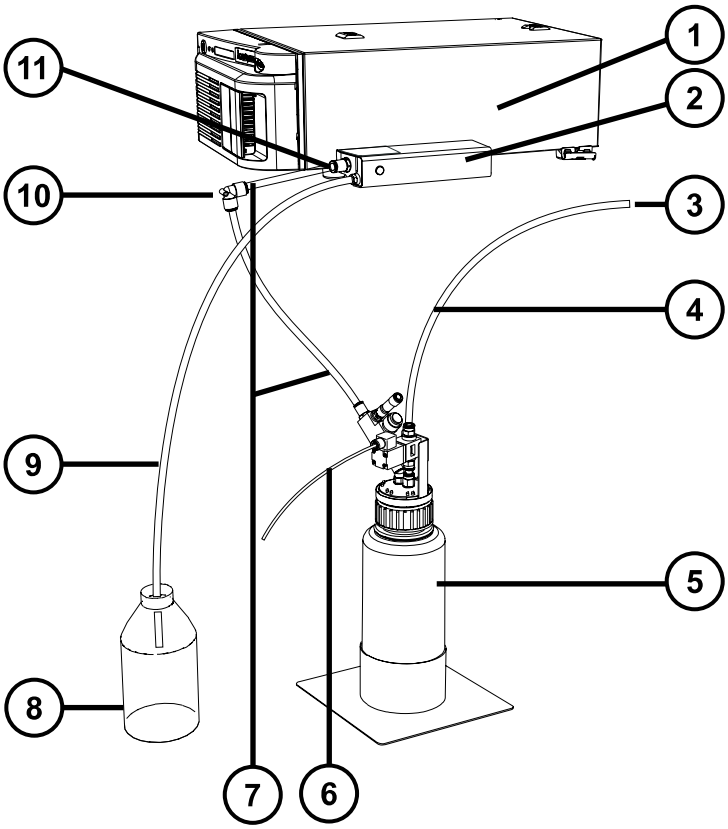

1. ACQUITY QDa
2. Source exhaust valve assembly
3. To laboratory exhaust system
4. PTFE tubing
5. Exhaust-trap bottle
6. Exhaust solenoid cable
7. PTFE tubing (ensure downward gradient)
8. Liquid waste container
9. Convoluted liquid waste tubing
10. 90-degree elbow

(11) Front exhaust connection

Tip: This figure shows a QDa detector fitted with the external, source exhaust valve assembly (serial number suffix "KAB"). To see the QDa detector fitted with the internal source exhaust valve (serial number suffix "KAD"), see the figures "Internal source exhaust valve—rear configuration" and "Internal source exhaust valve—front configuration" in Connecting the internal source exhaust valve (Page 101).

Figure E–13: Front configuration with LC stack

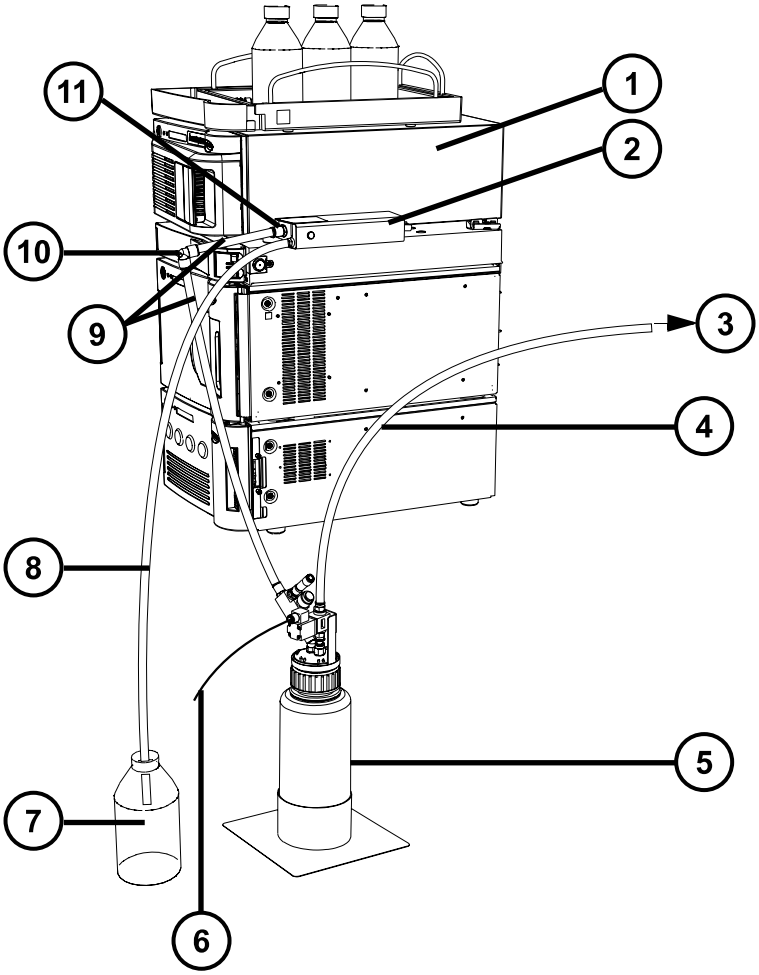

(1) ACQUITY QDa

(2) Source exhaust valve assembly

(3) To laboratory exhaust system

(4) PTFE tubing

(5) Exhaust-trap bottle

6. Exhaust solenoid cable
7. Liquid waste container
8. Convoluted liquid waste tubing
9. PTFE tubing (ensure downward gradient)
10. 90-degree elbow
11. Front exhaust connection

Tip: This figure shows a QDa detector fitted with the external source exhaust valve assembly (serial number suffix "KAB"). To see the QDa detector fitted with the internal source exhaust valve (serial number suffix "KAD"), see the figures "Internal source exhaust valve—rear configuration" and "Internal source exhaust valve—front configuration" in Connecting the internal source exhaust valve (Page 101).

E.7.3 Connecting the 2.5-L waste container

Perform the following procedure to connect the 2.5-L waste container to QDa models fitted with a diaphragm pump, and QDa models fitted with the rear drain bulkhead, including the following models:

- Performance QDa detector (serial number suffix "KAB")
- Standard QDa detector (serial number suffix "KAB")
- Standard QDa detector (serial number suffix "KAD")

Note: The Performance QDa detector fitted with the internal source exhaust valve (serial number suffix "KAD") does not connect to the 2.5-L waste container.

Required materials

- Chemical-resistant, powder-free gloves
- Bottle-stopper assembly
- 2.5-L bottle
- Cable ties

To connect to the 2.5-L waste container:

Requirement: Wear clean, chemical-resistant, powder-free gloves when performing this procedure.

1. Connect the bottle-stopper tube assembly's 4-mm outer-diameter (O.D.) drain tubing to the 4-mm bulkhead fitting on the instrument's rear panel (see the figure "Waste connections" in step 2).

   Tip: To ensure that excess tubing remains organized when the instrument is positioned at the bottom of an LC stack, loop the tubing without kinking it, and secure it using a cable tie. Alternatively, if the instrument is unlikely to change location, cut the tubing to length.

2. If you are using a Standard QDa detector, connect the 6-mm O.D. tube from the bottle-stopper assembly to the diaphragm pump's 6-mm elbow (as shown in the following figure).

   Figure E–14: Waste connections

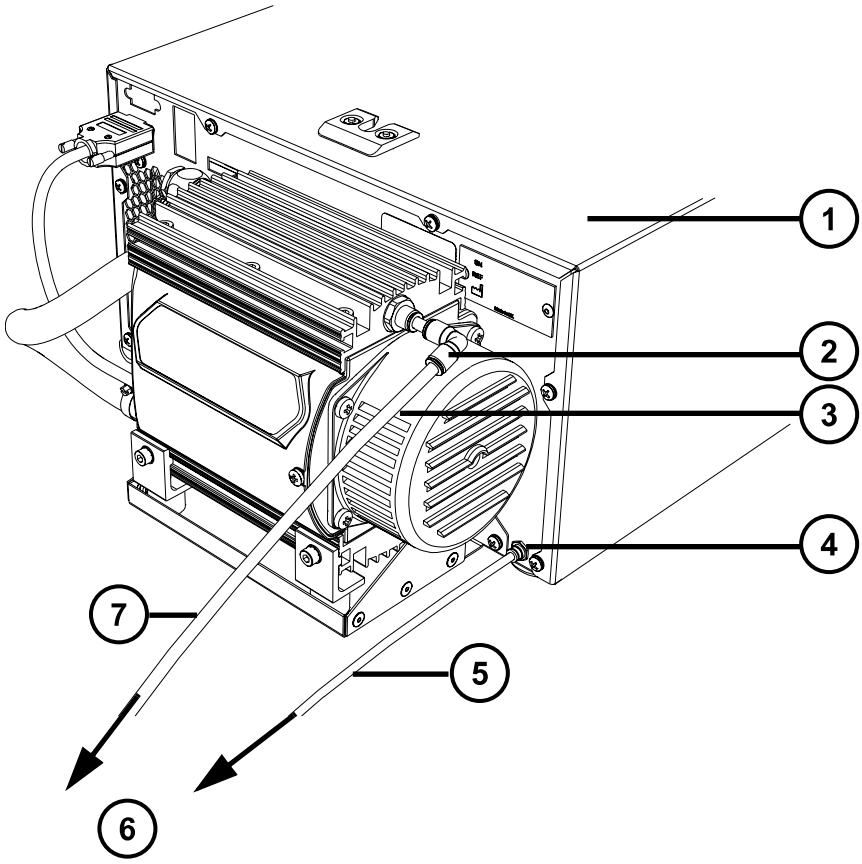

1. ACQUITY QDa detector
2. 6-mm elbow
3. Diaphragm pump (Standard QDa only)
4. 4-mm bulkhead fitting (KAB only)
5. 4-mm O.D. drain tubing (KAB only)
6. Route both tubes to the bottle-stopper assembly on the 2.5-L waste container

7 6-mm O.D. tubing (Standard QDa only)

Note:

- Performance QDa detectors use a separate rotary backing pump, not an attached diaphragm pump.
- The 4-mm bulkhead fitting and 4-mm O.D. drain tubing is only used with “KAB” models and earlier.

  Notice: To prevent damage to the instrument, ensure that these criteria are met:

  - The drain tubing is not submerged in solvent within the waste container.
  - The waste container is not used to collect solvent waste from other sources.

3. Secure the bottle-stopper onto the 2.5-L bottle (see the figure “2.5-L waste container tubing” in step 4).

   Note: The Performance QDa detector uses a rotary backing pump, which does not require the 6-mm O.D. drain tube. To minimize unused tubing, cut the 3-m length of 6-mm O.D. tubing close to the waste container.

4. Position the bottle in a readily accessible location below the instrument.

   Figure E–15: 2.5-L waste container tubing

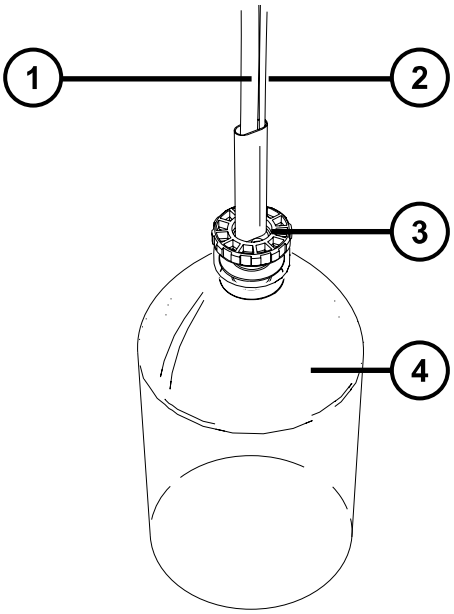

1 6-mm O.D. tubing (3-m hose)

2 4-mm O.D. drain tubing

3 Bottle-stopper

④ 2.5-L bottle

E.8 Connecting the nitrogen exhaust line

Required materials

- Chemical-resistant, powder-free gloves
- Utility knife
- 12-mm PTFE tubing (included in the Waters Rough Pump Connect Kit)
- 12-mm right-angle elbow connectors (included in the Waters Start-Up Kit)

Warning: To prevent the nitrogen exhaust from carrying biologically hazardous, toxic, or corrosive LC solvents, you must use a nitrogen exhaust trap bottle and a laboratory exhaust system. The laboratory exhaust system must provide a minimum vacuum of 0.20 kPa (2 mbar, 0.03 psi) below atmospheric pressure (negative pressure).

Warning: To avoid the buildup of hazardous gases, do not place the nitrogen exhaust trap bottle in an enclosed cabinet.

To connect the nitrogen exhaust line:

1. Locate the exhaust trap bottle in an accessible area below the instrument (see the figure "Exhaust trap bottle" below).

   Notice: To avoid gas leaks, use the tube cutter to cut the PTFE tubing squarely.

2. Cut a length of 12-mm tubing long enough to connect the instrument to the exhaust trap bottle.
3. Connect one end of the tubing to the exhaust port on the side of the instrument, and the other end to one of two ports on the exhaust trap bottle.

   Note: Ensure that there is a negative gradient between the exhaust port and the trap bottle inlet.

   Notice: To avoid gas leaks, use the tube cutter to cut the PTFE tubing squarely.

4. Cut a length of 12-mm tubing long enough to connect the exhaust trap bottle to the laboratory exhaust system.
5. Insert one end of the tubing into the remaining port on the exhaust trap bottle, and route the other end to the laboratory exhaust system.

Figure E–16: Exhaust trap bottle

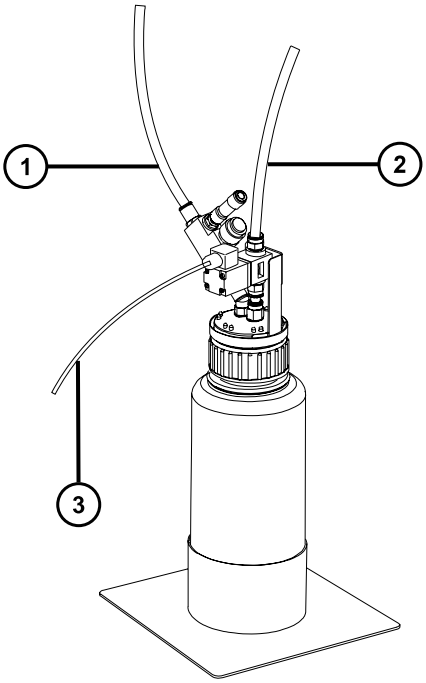

1. From instrument exhaust connection (12-mm OD)
2. To laboratory exhaust port (12-mm OD)
3. Exhaust solenoid cable

E.8.1 Connecting the exhaust solenoid cable

To connect the exhaust solenoid cable:

1. Connect the exhaust solenoid cable to the port on the exhaust trap bottle.

   Note: To avoid damaging the instrument, power it off when connecting the solenoid cable.

Figure E–17: Exhaust solenoid connection

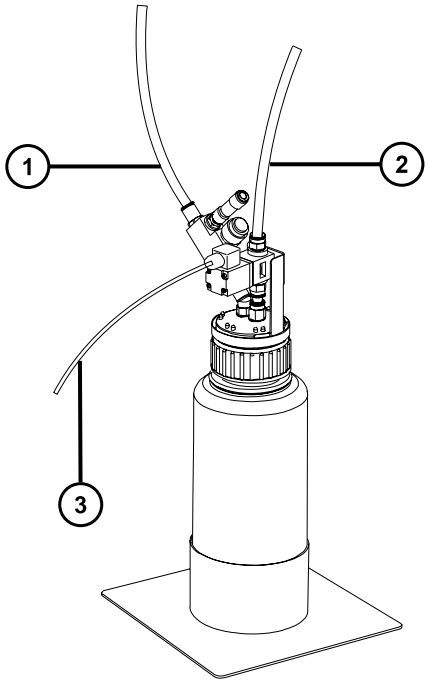

1. From instrument exhaust connection (12-mm OD)
2. To laboratory exhaust port (12-mm OD)
3. Exhaust solenoid cable

2. Connect the other end of the cable to the exhaust solenoid connection on the rear panel of the instrument (see External wiring and vacuum connections (Page 90)).

E.9 Connecting the workstation

Warning: To avoid injury from electrical shock or fire, and damage to the equipment, follow these guidelines:

- Do not expose the workstation or ancillary equipment to dripping or splashing liquids.
- Do not place objects filled with liquid, such as solvent bottles, on top of the workstation or ancillary equipment.

Prohibited: Do not place vessels containing liquid—such as solvent bottles—atop the workstation or ancillary equipment, or otherwise expose those units to dripping or splashing liquids.

Before connecting the workstation to the instrument, set up the workstation according to its accompanying instructions. Locate the workstation within five meters (16 feet) of the instrument.

Requirement: Use shielded network cables with the instrument to ensure compliance with FCC and other limits.

E.9.1 Connecting to the workstation:

1. Connect the peripherals to the PC.
2. Connect one end of the shielded network cable to the Ethernet port on the rear panel of the instrument.
3. Connect the other end of the cable to the ACQUITY Ethernet switch box.
4. Connect one end of another shielded network cable to the ACQUITY Ethernet switch box.
5. Connect the other end of the cable to the port labeled Instrument LAN on the workstation rear panel.

   Notice: Do not connect the instrument's power supply cord until you complete the installation procedures in the previous sections.

E.9.2 Connecting the instrument to the power source:

1. Select the correct power cord for your location.
2. Connect the female end of the power cord to the power port on the rear panel of the instrument.

E.10 Input/output signal connectors

Warning: To avoid electric shock, separate all electrical connections to the rear panel from hazardous voltages by double or reinforced insulation. Circuits of this type are classified as safety extra low voltage (SELV). Examples of circuits that are typically SELV include contact closure inputs and outputs for autosamplers, and UV, RI, and fluorescence detector signal outputs for LC/MS systems. The electrical connections on the rear panel of this mass spectrometer are all SELV.

Notice: To avoid damage to the instrument, do not exceed these voltages:

- ±30 Vdc to the Analog (Out) connection.
- 30 Vdc to the Stop Flow (Out), Inject Start (In), Switch 2 (Out), Switch 3 (Out), and Switch 4 (Out) connections.

The instrument’s rear panel includes a removable connector that hold the screw terminals for I/O signals. These connectors are keyed so that they can receive a signal cable inserted only one way.

Figure E–18: I/O signal connector

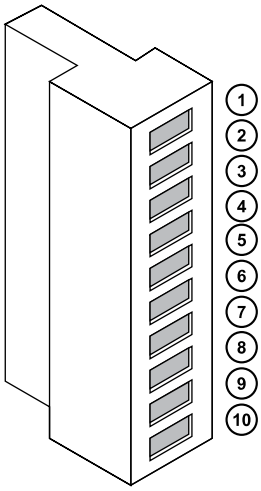

1. Stop Flow (Out)
2. Stop Flow (Out)
3. Switch (Out)
4. Switch (Out)
5. Inject Start (In)
6. Inject Start (In)
7. Event (In)
8. Event (In)
9. Analog (Out)
10. Analog (Out)

E.10.1 Signal connections

Table E–1: Instrument analog-out/event-in connections

Signal connections	Description
Analog (Out)	Used for analog chart output functionality. The output voltage range is 0 to 1 V. The resolution of the voltage output is 12 bits.

Table E–1: Instrument analog-out/event-in connections (continued)

Signal connections	Description
Stop Flow (Out)	Used to stop the solvent flow if the nitrogen gas supply fails. Maximum 30 V, 0.5 A, 10 W.
Inject Start (In)	Signals the start of an injection. Maximum 30 V.
Event (In)	Allows an external device to start data acquisition. Maximum 30 V.
Switch (Out)	Used to send time-based contact closure signals to external devices. Maximum 30 V, 0.5 A, 10 W.

Requirement: To meet the regulatory requirements of immunity from external electrical disturbances, install connection covers over the signal connectors.

To make signal connections:

1. Reference the signal connection location from the silk-screened label for inject start or any other input/output connection you plan to use from Connector I or II on the rear panel of each instrument.
2. To make the signal connections, attach the positive and negative leads of the signal cable to the connector.

Figure E–19: Signal connections

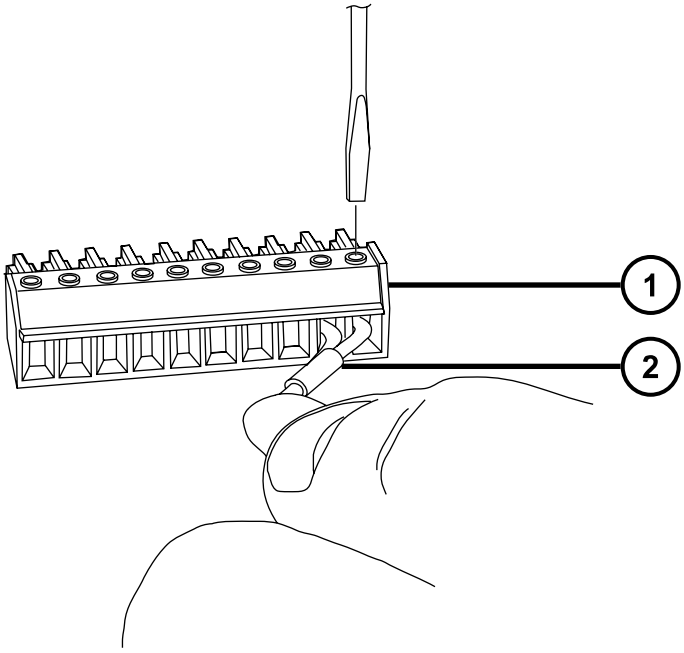

1 Connector

(2) Signal cable

3. Place the second connection cover over the first cover and snap it into place.

Figure E–20: Connection cover

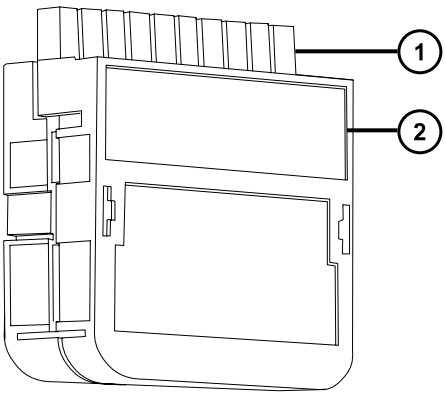

(1) Signal connector

(2) Connection cover

E.11 Connecting to the power supply

To connect the instrument to the power supply, refer to Connecting to the electricity source (Page 76).

F Optional ACQUITY Diverter Valve

F.1 Diverter valve safety advisories

Warning: To avoid electric shock, ensure that the ACQUITY Diverter Valve is grounded before connecting the ESI probe. The diverter valve is grounded by fitting it to the mounting bracket on the instrument and plugging in the power supply unit.

Requirements:

- Only use ACQUITY Diverter Valve with the grounded power supply unit supplied with it.
- Do not place the ACQUITY Diverter Valve directly on top of the ACQUITY QDa Detector. You must attach the valve to the instrument using the supplied mounting bracket.
- Do not remove the mount fitted to the ACQUITY Diverter Valve. It is used for attaching the valve to the mounting bracket on the QDa.

F.2 Installing the ACQUITY Diverter Valve

F.2.1 Fitting the diverter valve assembly

Required materials

- Mounting bracket
- Diverter valve and mount
- 1/4-inch hex nut socket wrench supplied with the ACQUITY Diverter Valve Assembly Kit

To install the diverter valve assembly on the QDa detector:

1. Stop the flow from the LC and ensure that the QDa detector is in standby mode.
2. De-stack the instruments and devices in the system to obtain sufficient access to the QDa instrument case.

   Notice: To avoid damaging the QDa or other instruments and devices, you must first de-stack the system. Take the steps necessary to disable each instrument and device in the system before de-stacking it.

3. If the tubing guide is fitted to your instrument, remove it to allow the diverter valve to fit to your instrument.

   See also: Removing the tubing guide (Page 124)

4. Use the 1/4-inch hex nut socket wrench to unscrew the 1/4-inch hex nuts in the recessed holes of the QDa guide bracket that is located on top of the QDa at the front end of the instrument, and remove it.

Figure F–1: Removing the QDa guide bracket

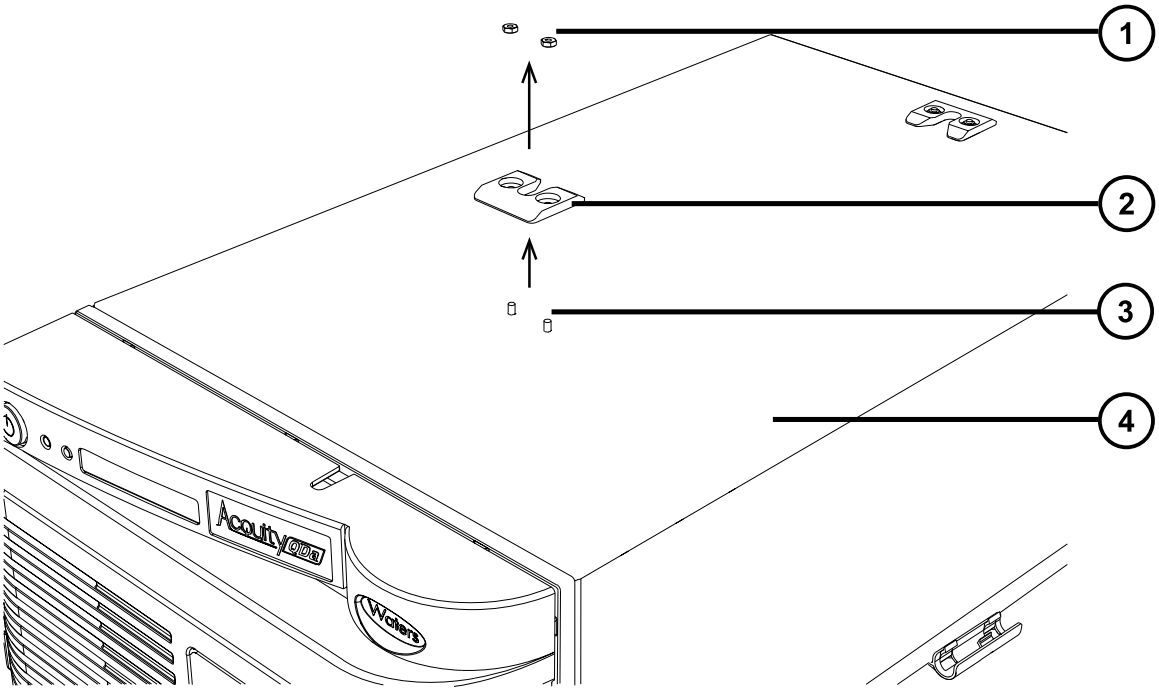

(1) Two 1/4-inch hex nuts

(2) QDa front guide bracket

(3) Retaining studs

(4) Instrument case

5. While facing the front of the QDa detector, hold the diverter valve mounting bracket with the drip tray shelf positioned to your right, and lower the bracket onto the top of the QDa detector instrument case.

   Note: Align the two retaining stud holes in the mounting bracket with the studs on the top of the instrument case.

Figure F–2: Fitting the ACQUITY diverter valve mounting bracket

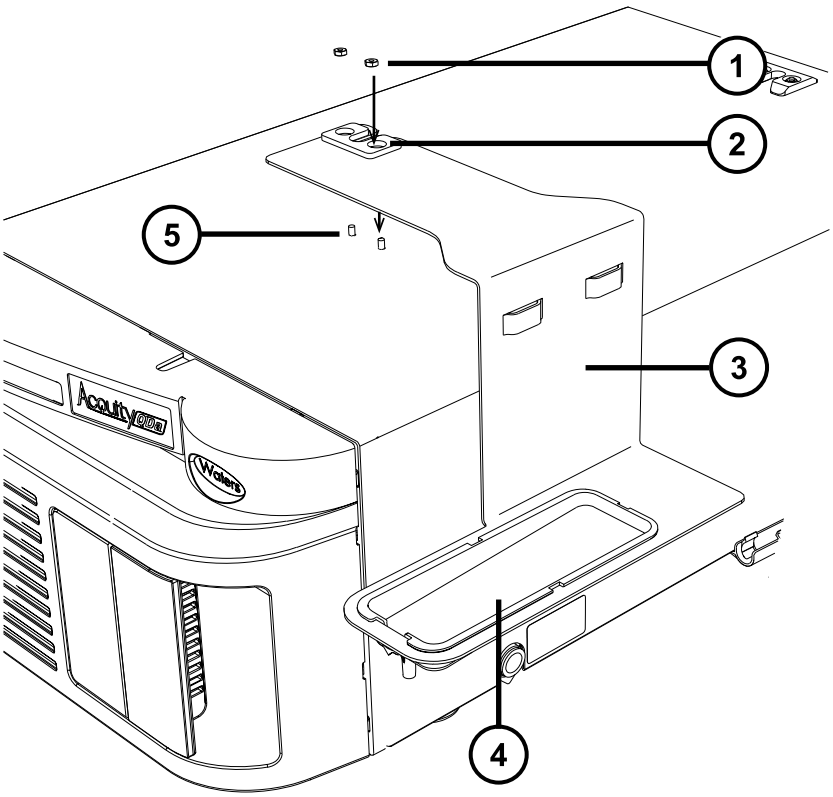

1. Two 1/4-inch hex nuts
2. Retaining stud holes
3. Diverter valve mounting bracket
4. Bracket drip tray
5. Retaining studs

6. Screw the hex nuts to the studs using the 1/4-inch hex nut socket wrench.
7. Fit the diverter valve to the mounting bracket by aligning the two hooks on the diverter valve mount on the left side of the valve with the corresponding slots on the mounting bracket, and lower the device until the hooks are securely in the place.

Figure F–3: Fitting the diverter valve onto the mounting bracket

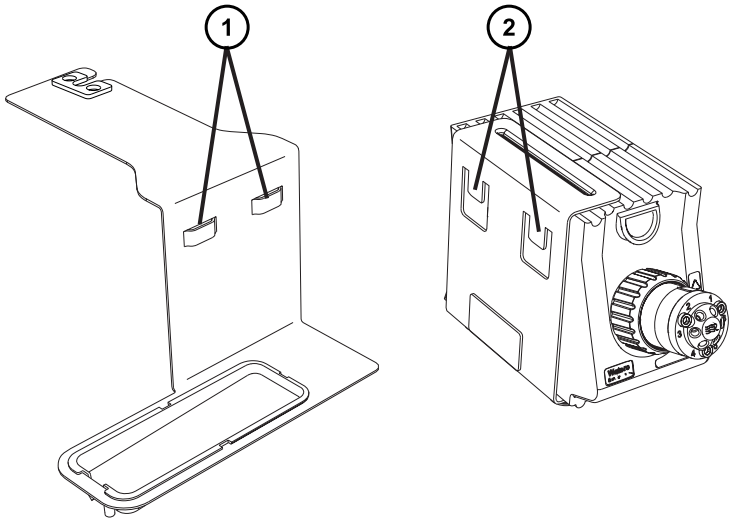

1 Mounting bracket hook slots

2 Mount hooks

F.2.1.1 Removing the tubing guide

If a tubing guide is fitted to your instrument, you must remove the guide before fitting the diverter valve assembly to the QDa detector. The tubing guide obstructs the placement of the diverter valve.

Required materials

- 4-mm hex wrench
- #4 POZIDRIV screwdriver

To remove the QDa tubing guide:

1. Stop the flow from the LC and switch off the QDa detector.
2. Remove the source enclosure from the instrument (see Removing the source enclosure from the instrument (Page 26)).
3. Use the 4-mm hex wrench to unscrew the six hex-cap retaining bolts that secure the front panel to the instrument case.

Figure F–4: Removing the QDa front panel

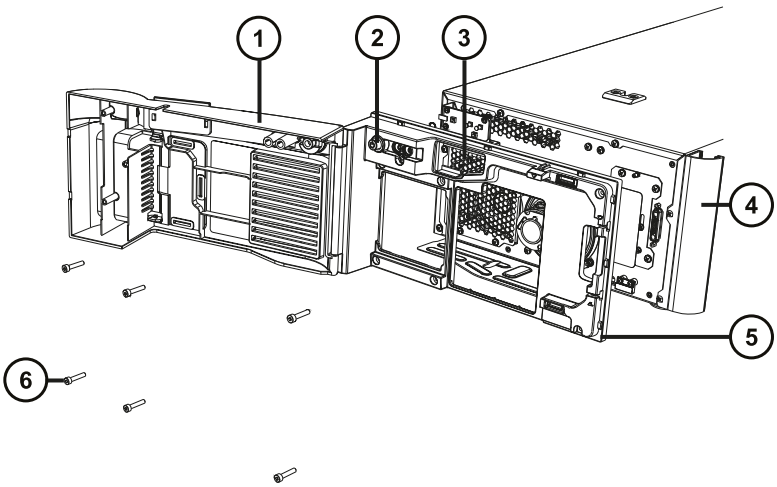

1. QDa instrument door
2. QDa switch cover
3. Air filter
4. Tubing guide
5. Front panel
6. Six 4-mm hex-cap retaining bolts

4. Use the #4 POZIDRIV screwdriver to loosen the two #4 POZIDRIV screws that secure the tubing guide to the instrument case, remove the guide, and tighten the screws.

Figure F–5: Removing the tubing guide

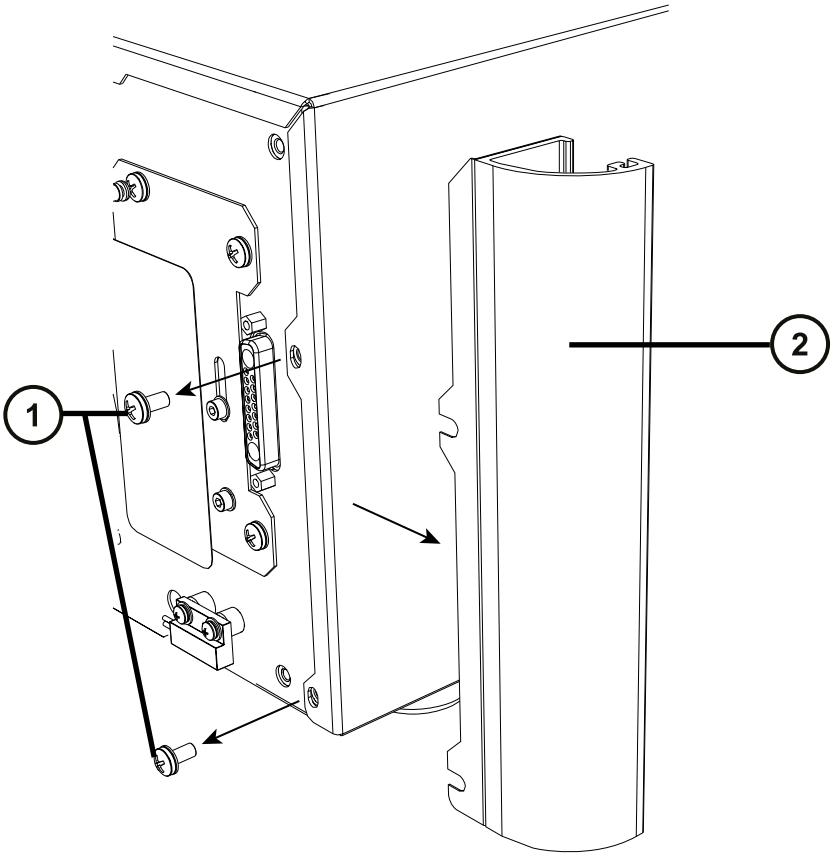

1 Two #4 POZIDRIV screws

2 Tubing guide

5. Ensure that the QDa switch cover and the air filter are correctly in place on the front panel and use the 4-mm hex wrench to tighten the six 4-mm hex-cap retaining bolts to secure the front panel to the instrument.
6. Fit the source enclosure to the instrument (see Fitting the source enclosure to the instrument (Page 27)).

F.2.2 Diverter valve wiring

When making connections to the ACQUITY diverter valve's rear panel, refer to the figure "Rear panel connections" in this topic.

Figure F–6: Rear panel connections

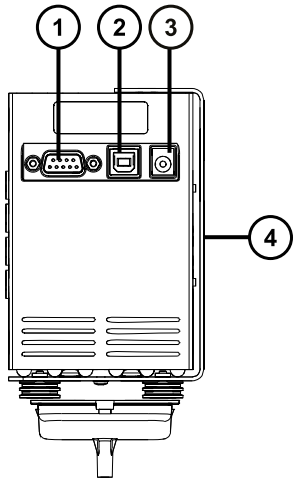

1. 9-pin D-Type socket for the contact closure cable
2. USB socket (not used)
3. Power cable socket
4. Diverter valve mount

For details of supported system configurations, contact Waters Technical Service.

F.2.2.1 Connecting the diverter valve to the QDa

Required materials

- Contact closure cable
- Flat-blade screwdriver

To connect the diverter valve to the QDa:

1. Attach the contact closure cable to the 9-pin D-type socket at the rear of the valve.
2. At the other end of the cable, connect the signal connectors to the corresponding ports on the signal connection box at the rear of the QDa.

   Note: Some of these connectors share their port slot with other instruments and devices in the system that connect to the QDa.

Signal connector	Color	Port number
Stop Flow +	Red	1
Stop Flow -	Black	2
Switch +	White	3

Signal connector	Color	Port number
Switch -	Black	4
Analog -	Black	9

See also: Input/output signal connectors (Page 117)

F.2.2.2 Connecting the diverter valve to the electricity source

Warning: To avoid electric shock, observe these precautions:

- Inspect the power cords for damage and replace them if necessary.
- Power-off and unplug each module before performing any maintenance operation on it.
- Connect each module to a common ground.

To connect to the electricity source:

Recommendation: Use a line conditioner and uninterruptible power supply (UPS) for optimum long-term input voltage.

1. Connect the female end of the power cord to the receptacle on the rear panel of the detector.
2. Connect the male end of the power cord to a suitable wall outlet.

F.2.3 Configuring the diverter valve fluidics

The ACQUITY diverter valve can be configured to switch the sample flow direction between the QDa and waste in divert mode, or configured in loop injection mode.

Warning: To avoid electric shock, ensure that the ACQUITY Diverter Valve is grounded before connecting the ESI probe. The diverter valve is grounded by fitting it to the mounting bracket on the instrument and plugging in the power supply unit.

See also: Diverter valve wiring (Page 126)

Notes:

- The descriptions and figures in this section show diverter valve configurations based on common setups of the ACQUITY QDa Detector and the ACQUITY Diverter Valve. For details about alternative LC tubing on system configurations that include in-line optical detectors, see Diverter valve tubing considerations (Page 130).
- In the **QDa Method Events** tab, the ON command refers to position 1 and the OFF command refers to position 2.

Recommendation: To ensure that the sample flow direction is correct for each command, plumb the connections as shown in this document.

Figure F–7: Common configuration of the diverter valve operating in divert mode

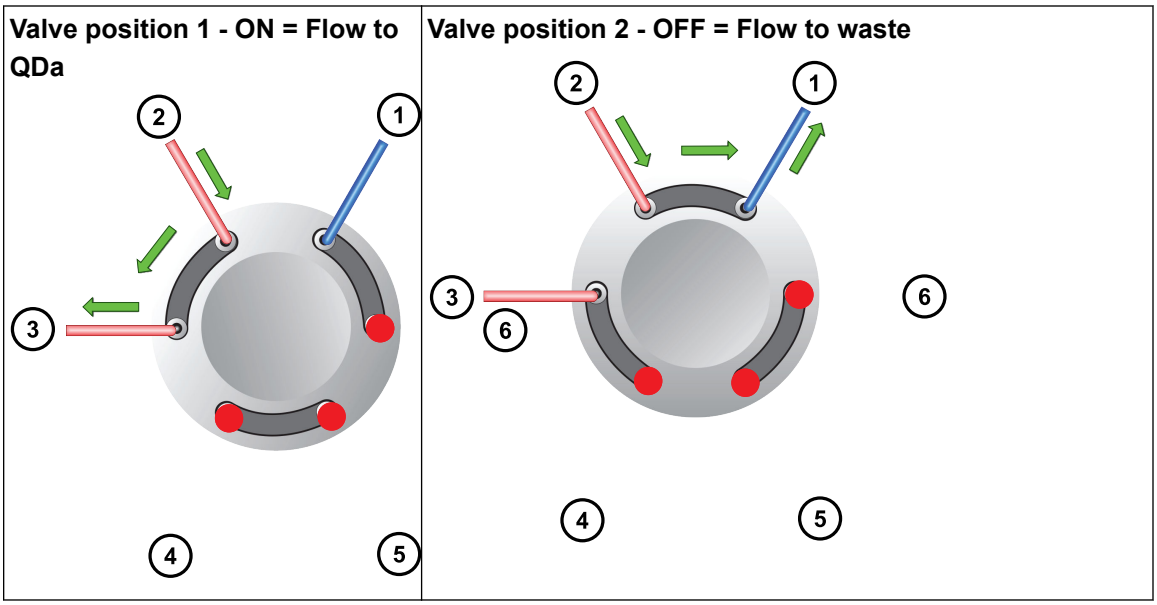

1. To waste (blue PEEK tubing, 0.01-inch internal diameter)
2. From LC (red PEEK tubing, 0.005-inch internal diameter)
3. To QDa (red probe assembly, 250 mm)
4. Not used (plugged port)
5. Not used (plugged port)
6. Not used (plugged port)

Figure F–8: Common configuration of the diverter valve operating in loop injection mode

Valve position 1 - Load sample	Valve position 2 - Inject sample

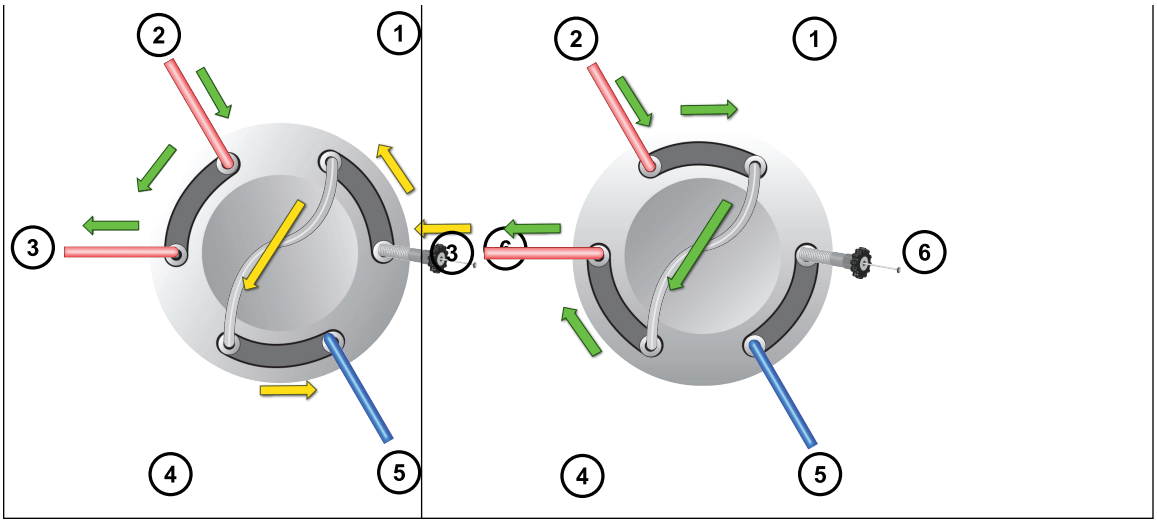

(1)(4) Loop

(2) From LC (red PEEK tubing, 0.005-inch internal diameter)

(3) To QDa (red probe assembly, 250 mm)

(5) Excess sample to waste (blue PEEK tubing, 0.01-inch internal diameter)

(6) Loop injection port

See also:

- Diverter valve tubing considerations (Page 130)
- Operating the ACQUITY diverter valve (Page 132)

F.2.3.1 Diverter valve tubing considerations

Where an optical detector such as a PDA or TUV is configured in-line with the ACQUITY QDa Detector and an ACQUITY Diverter Valve, it is important to consider the system flow rate, due to the maximum recommended pressure limit of the flow cell.

Typically, the maximum flow rate for the QDa is 2 mL/min. However, the following table describes the maximum recommended flow rates for system configurations that include an in-line optical detector.

In-line optical detector	Maximum flow rate	Tubing
ACQUITY PDA/TUV	1.25 mL/min	Red PEEK tubing, up to 500 mm, 0.005-inch I.D.

In-line optical detector	Maximum flow rate	Tubing
ACQUITY PDA/TUV	1.0 mL/min	Black PEEK tubing, up to 500 mm, 0.004-inch I.D.
Alliance 2998/2489	1.5 mL/min	Blue PEEK tubing, up to 500 mm, 0.010-inch I.D.

F.2.4 Configuring the diverter valve waste tubing

Required materials

- Blue PEEK tubing
- Tygon waste tubing
- PEEK fitting for the diverter valve
- Y-pieces (for teeing in waste tubing)
- PEEK tubing cutter
- Scissors

1. Attach one end of the Tygon tubing to the spur on the underside of the drip-tray.

Figure F–9: Diverter valve waste tubing connections

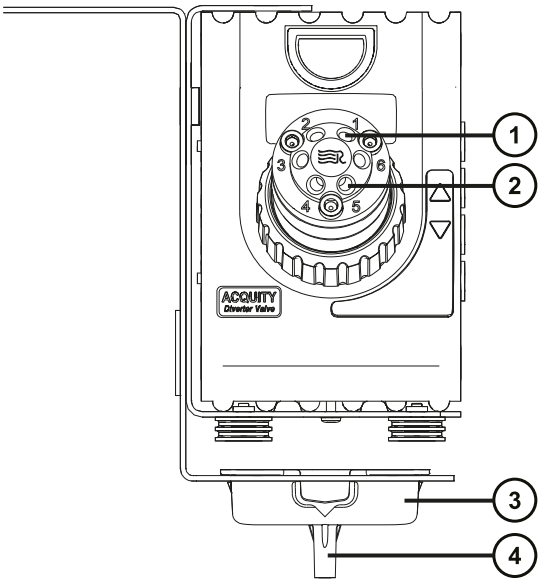

(1) Waste port for blue PEEK tubing (standard divert mode configuration only)

(2) Waste port for blue PEEK tubing (loop injection configuration only)

③ Mounting bracket drip tray

④ Drip tray Tygon waste tubing spur

2. Use the PEEK fitting to screw one end of the blue PEEK waste tubing to the diverter valve until finger-tight.

   Note: Fit the blue PEEK waste tubing to port 1 in divert mode configuration. Fit the tubing to port 5 in loop injection configuration.

   See also: Configuring the diverter valve fluidics (Page 128).

3. Cut the Tygon tubing and the blue PEEK tubing to the required lengths and feed these into a suitable waste collection vessel, using Y-pieces supplied with the ACQUITY Diverter Valve Assembly Kit for teeing in the tubing as required.

F.3 Operating the ACQUITY Diverter Valve

F.3.1 Programming the diverter valve for operation

You can actuate the diverter valve by manually switching the valve positions using the buttons on the front panel, by using method events to program the valve operation, or by a combination of manual switching and programmed operation. You can configure any combination of ON/OFF method events.

Note: Configure the method events in the Events table of the QDa Method Events Editor.

Tip: Add a toggle switch command to the first line in the method events table, immediately followed by the required valve starting position, to ensure that the flow switches automatically to the correct valve start position when resuming programmed operation after manual actuation.

Table F–1: Method events for programmed operation

Command	Valve function
ON	Valve moves to, or stays in, position 1 (Flow to QDa).
OFF	Valve moves to, or stays in, position 2 (Flow to waste).
Toggle	Valve moves to the opposite of the current position.

Notes:

- The ON and OFF commands configured in Empower ICS 1.68 method events are labeled "ON/Flow to QDa" and "OFF/Flow to Waste".
- The Pulse command that appears in MassLynx method events is not active.

Example configuration for operating the valve using programmed and manual actuation:

Figure F–10: Diverting flow to waste between 1 minute and 1.5 minutes

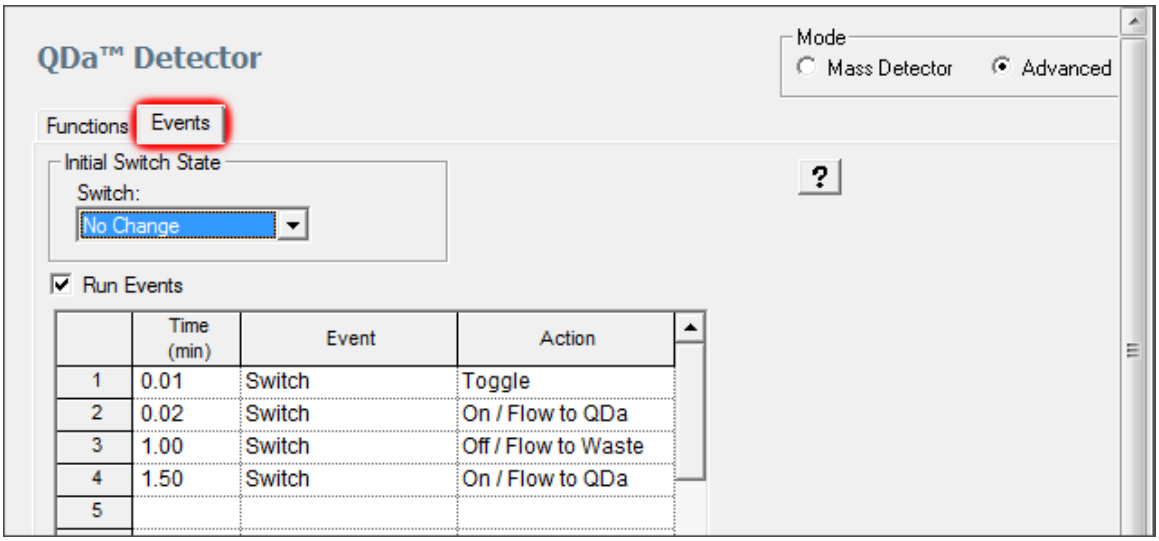

Notes:

- The events can be configured according to your requirements.
- The example is taken from the ACQUITY QDa Detector ICS, version 1.68.

F.3.2 Manually operating the diverter valve

Manually operate the ACQUITY diverter valve by pressing the front-panel buttons.

Figure F–11: Diverter valve manual actuation

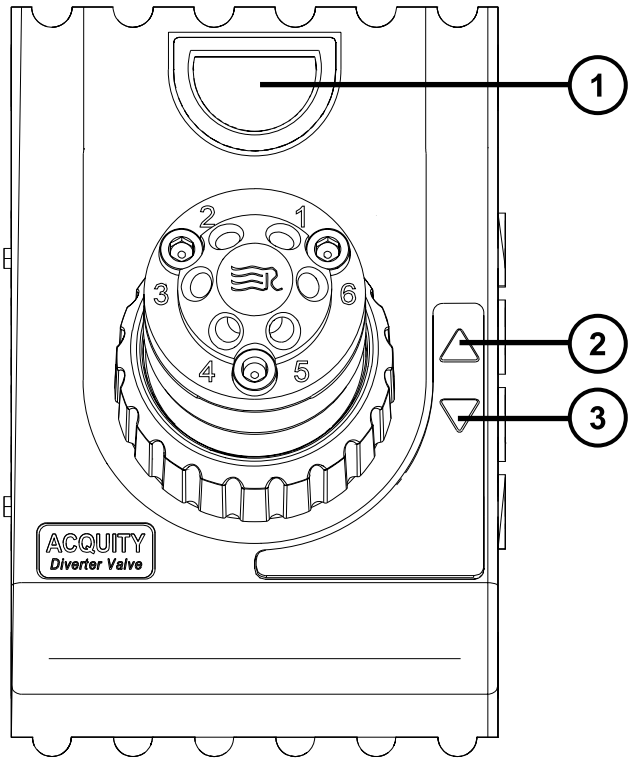

1. Digital display: Shows the valve position number (1 or 2)
2. Up arrow: Valve moves to, or stays in, position 2.
3. Down arrow: Valve moves to, or stays in, position 1.

F.3.3 Injecting sample and manually actuating the diverter valve

To inject sample and manually actuate the diverter valve:

1. Ensure that the QDa is on and mobile phase is flowing from the configured pump.
2. Ensure that the valve is in position 1.

   Note: If the valve is not in position 1, manually actuate it by pressing the `Down arrow` ( ) on the front panel to move the valve from position 2 to position 1.
3. Inject sample through the injection port (700000472) in valve port 6, using a syringe.

   Recommendations:

- To ensure reproducibility, overfill the loop by three times the loop volume. Overfilling flushes out excess solvent from previous infusions, and ensures that sample is introduced to the QDa consistently.
- When loading samples, consider the miscibility of the sample solvent and the carrier solvent. Dilute the sample in the carrier solvent before filling the loop, if necessary.

Result: The loop fills with sample ready for introducing into the QDa for analysis.

4. Start the QDa acquisition using the QDa software.

   See also: The instrument software Help.

5. Manually actuate the valve by pressing the `Up arrow` (△) on the front panel to move the valve from position 1 to position 2.

   Result: Sample is injected through the loop into the QDa.

6. To prepare for the next injection, manually actuate the valve by pressing the `Down arrow` (▽) on the front panel to move the valve from position 2 to position 1.

   See also:

   - Manually operating the diverter valve (Page 133)
   - Programming the diverter valve operation (Page 132)

F.4 Diverter valve maintenance procedures

This section provides the maintenance guidelines and procedures necessary to maintain the device's performance.

Clean the diverter valve when the performance reduces to unacceptable levels. Replace diverter valve components if they become irretrievably damaged.

F.4.1 Cleaning the diverter valve

Required material

- Chemical-resistant, powder-free gloves
- Suitable vessel in which to immerse rotor seal and stator when cleaning
- 9/64-inch hex wrench supplied with the ACQUITY Diverter Valve Assembly Kit
- HPLC-grade (or better) 1:1 methanol/water
- Ultrasonic bath
- Source of oil-free, inert gas for drying (for example, nitrogen)

Warning: To avoid personal contamination with biologically hazardous or toxic compounds, wear clean, chemical-resistant, powder-free gloves when performing this procedure.

To clean the diverter valve:

1. Stop the flow from the LC, ensure that the QDa detector is in standby mode, and disconnect the power cable from the ACQUITY Diverter Valve.
2. Disconnect all tubing from the valve.
3. Remove the 3 hex bolts securing the valve to the rotor using the 9/64-inch hex wrench.
4. Remove the valve stator and rotor seal from the valve assembly.

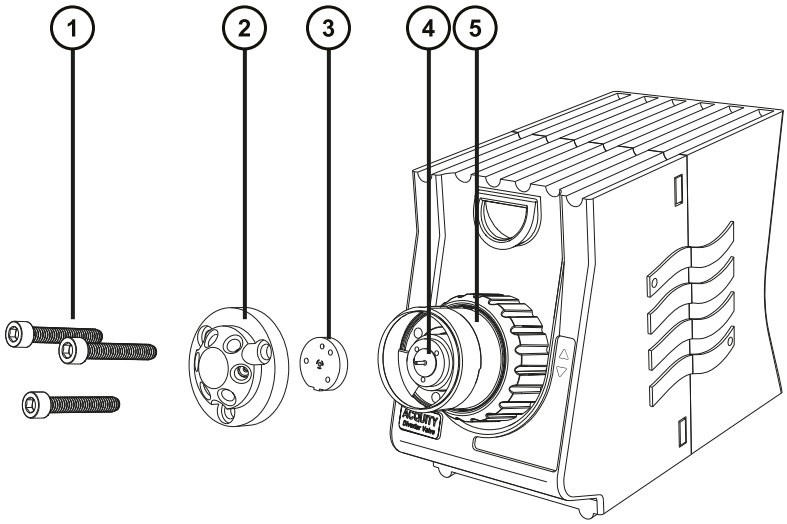

1. Retaining bolts
2. Stator
3. Rotor seal
4. Valve pod spindle
5. Diverter valve pod

5. Sonicate the stator and rotor seal in methanol for 20 minutes.
6. Reassemble the valve, and then evenly tighten the 3 hex bolts to ensure an adequate seal.
7. Inspect the tubing and fittings prior to reconnecting and replace if signs of damage or leaking are visible.

F.4.2 Replacing the diverter valve components

F.4.2.1 Replacing the diverter valve stator and rotor seal

Replace the diverter valve stator or the rotor seal if one of them becomes damaged.

See also: Replacing the diverter valve pod (Page 138)

Required materials

- Protective eyewear
- Chemical-resistant, powder-free gloves
- 9/16-inch hex wrench, supplied with the ACQUITY Diverter Valve Assembly Kit
- Rotor seal
- Stator (Stainless steel or Titanium)

To replace the ACQUITY diverter valve stator and rotor seal:

1. Stop the flow from the LC, ensure that the QDa detector is in standby mode, and disconnect the power cable from the diverter valve.
2. Disconnect the fluidics tubing from the stator on the front of the diverter valve.
3. Use the 9/16-inch hex wrench to unscrew the 3 retaining bolts and remove the stator.

Figure F–12: Replacing the diverter valve stator and rotor seal

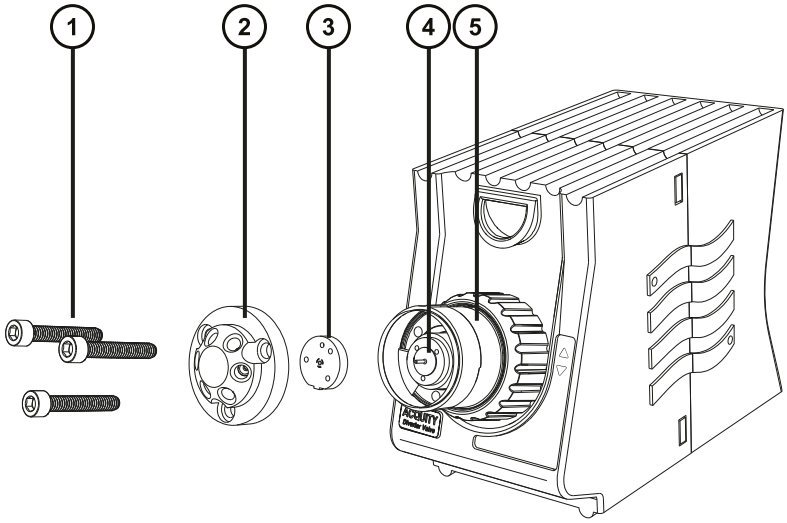

1 Retaining bolts

2 Stator

3 Rotor seal

4 Valve pod spindle

5 Diverter valve pod

4. Remove the rotor seal from the front of the valve pod spindle.
5. Dispose of the used stator and rotor seal in accordance with local environmental regulations.
6. Fit the new rotor seal into place by carefully matching the alignment pins with the corresponding slots on the front of the valve pod spindle.
7. Fit the stator to the front of the pod, taking care to align the bolt holes on the stator with the bolt holes on the pod, and insert and screw in the retaining bolts at the front of the stator using the 9/16-inch hex wrench.

   Note: Evenly tighten the 3 hex bolts to ensure an adequate seal.
8. Inspect the tubing and fittings prior to reconnecting and replace if signs of damage or leaking are visible.

F.4.2.2 Replacing the diverter valve pod

Replace the diverter valve pod if it becomes irretrievably damaged.

See also: Replacing the diverter valve stator and rotor seal (Page 137)

Required materials

- Protective eyewear
- Chemical-resistant, powder-free gloves
- Diverter valve pod (Stainless steel or Titanium)

To replace the ACQUITY diverter valve pod:

1. Stop the flow from the LC, ensure that the QDa detector is in standby mode, and disconnect the power cable from the ACQUITY diverter valve.
2. Disconnect the fluidics tubing from the pod stator on the front of the diverter valve.
3. Unscrew the diverter valve pod collar and remove it.
4. Retract the diverter valve pod from the valve.

Figure F–13: Removing the diverter valve pod

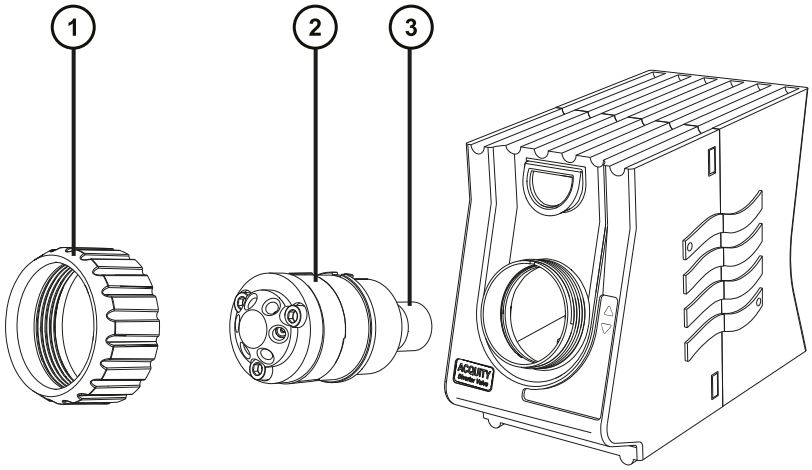

1 Pod collar

2 Diverter valve pod

3 Valve pod spindle

5. Dispose of the used pod in accordance with local environmental regulations.
6. Slide the new pod into the cuff on the valve, and carefully slot the pod key into the corresponding alignment keyway of the pod cuff on the valve.

   Note: Ensure that the ridges on the back end of the spindle align with the corresponding ridges on the spindle lock inside the diverter valve unit.

Figure F–14: Aligning the diverter valve pod key with the keyway on the cuff of the valve casing

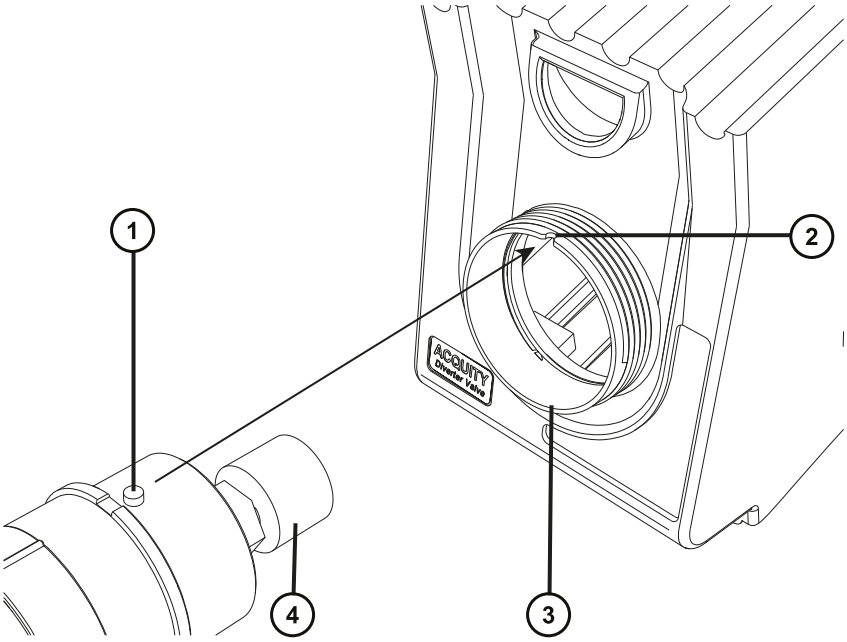

1. Pod key
2. Alignment keyway
3. Valve pod cuff
4. Spindle

7. Screw the pod collar onto the pod cuff on the valve.
8. Inspect the tubing and fittings prior to reconnecting, and replace these if signs of damage or leaking are visible.

F.5 Removing the diverter valve assembly

Required materials

- 1/4-inch hex nut socket wrench supplied with the ACQUITY Diverter Valve Assembly Kit

To remove the diverter valve assembly:

1. Stop the flow from the LC, ensure that the QDa detector is in standby mode, and disconnect the ACQUITY diverter valve power cable from the power supply.

2. De-stack the instruments and devices in the system to obtain sufficient access to the QDa instrument case.

   Notice: To avoid damaging the QDa or other instruments and devices, you must first de-stack the system. Take the steps necessary to disable each instrument and device in the system before de-stacking it.

3. Disconnect the power cable and the contact closure cable from the sockets at the rear of the valve.

   Figure F–15: Diverter valve rear-view cable connections

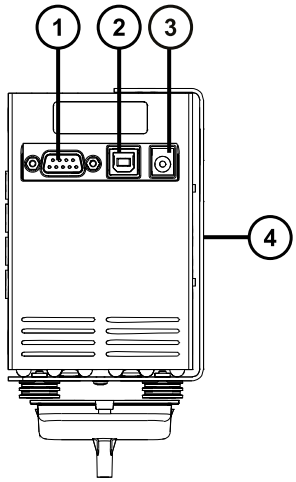

   1. 9-pin D-type contact closure cable socket
   2. USB socket (not used)
   3. Power cable socket
   4. Diverter valve mount

4. Detach the fluidics connections from the front of the diverter valve, including the following (depending on your valve configuration):
   - Tygon waste tube attached to the drip-tray spur.
   - PEEK tubing connector from the LC, in position 2 on the valve (see Diverter valve tubing considerations (Page 130)).
   - Red probe assembly connector to the QDa, in position 3 on the valve.
   - To waste (blue PEEK tubing connector, in position 1 or 5, depending on the mode of operation: divert mode/loop injection mode).
   - Loop between positions 1 and 4 on the diverter valve (loop injection configuration only).
5. Lift the diverter valve upward to free the hooks on the diverter valve mount on the left side of the device casing from the slots on the mounting bracket on the instrument case.

Figure F–16: Removing the diverter valve from the mounting bracket

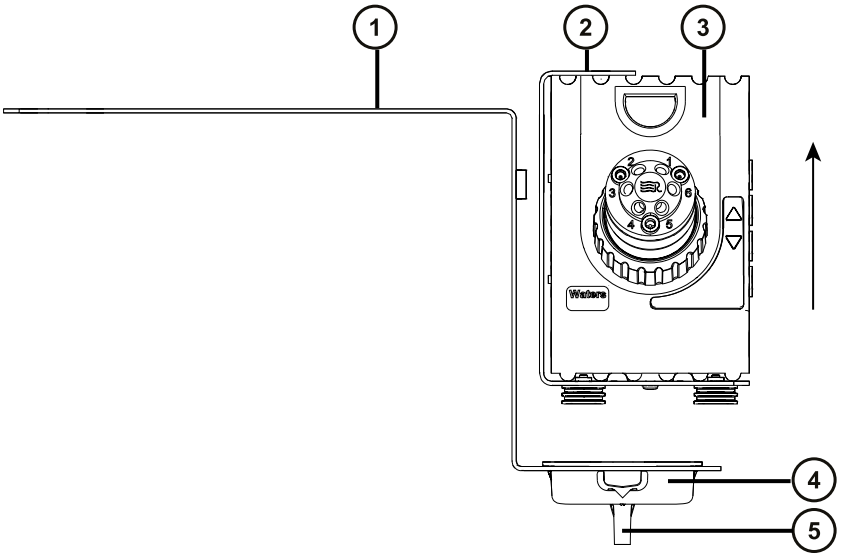

1. Diverter valve mounting bracket
2. Diverter valve mount
3. Diverter valve
4. Drip tray
5. Drip tray waste spur

6. Use the 1/4-inch hex nut socket wrench to unscrew the retaining nuts in the recessed holes on the diverter valve mounting bracket on the top of the QDa Detector instrument case, and remove the mounting bracket.